DALEVILE III - Apartments, LLC

Project Specification Manual

~~**November 20, 2025**~~ February 19, 2026

HUD Number: 051-35907

Project Team

Owner:

Daleville Town Center Apartments Phase III, LLC
2903-A Boulevard
Colonial Heights, Virginia 23834

Telephone: 804.419.2285

Contact: Phil Roper
Email: proper@whittle-roper.com

Structural Engineer:

Cates Engineering, Ltd.
13575 Heathcote Boulevard, Suite 170
Gainesville, Virginia 20155

Telephone: 571.261.9280
Facsimile: 571.261.9286

Contact: Matthew Pocius
E-mail: mpocius@cateseng.com

Civil Engineer:

Engineering Concepts, P.E.

94 Greenfield Street
Daleville, Virginia 24083

Telephone: 540.588.3312

Contact: Bobby Wampler, P.E.
E-mail:
bwampler@engineeringconcepts.com

M.E.P. Engineer:

Phillips Gradick Engineering

1435 West Morehead Street, Suite 200
Charlotte, NC 28208

Telephone: 704.900.5838

Contact: Brittany Evans
E-mail: Bevans@pgeng.net

Owner_____ Lender_____

Contractor_____ Bonding Company_____

Architect_____ Civil Engineer_____

POOLE & POOLE ARCHITECTURE
4240 Park Place Court
Glen Allen, Virginia 23060
Telephone: 804.225.0215
Internet: www.2pa.net

DOCUMENT 00 0102 - PROJECT INFORMATION

PART 1 - GENERAL

1.1 PROJECT INFORMATION

A. Project Name: Daleville Town Center Apartments III, LLC

B. Project number: 25015

C. The Owner, hereinafter referred to as Owner: Daleville Town Center Apartments III, LLC

D. Owner's rep: Phil Roper

1.2 PROJECT DESCRIPTION

A. Summary Project Description:

1. Project Location: Daleville, VA.

B. Owner: Daleville Town Center Apartments III, LLC

1. Owner's Representative: Phil Roper

C. Architect: Poole and Poole Architecture to provide architectural and engineering services.

1.3 WORK COVERED BY CONTRACT DOCUMENTS

A. The Work of Project is defined by the Contract Documents and consists of the following:

1. Construction and construction financing

B. Type of Contract.

1. Lump sum

1.4 Procurement Timetable

A. Notice of Award: To be determined

B. Contract Time: To be stated in bid documents

C. Desired Construction Start: To be determined

D. Desired Substantial Completion Date: To be determined

E. Desired Final Completion Date: To be determined

F. Completion date is a critical due to requirements of Owner's operations.

G. The owner reserves the right to change the schedule or terminate the entire procurement process anytime.

1.5 Procurement Documents

A. Availability of Documents: Complete sets of procurement documents may be obtained:

1. At the following address: Fred LeGates, email: flegates@2pa.net

PART 2 - PRODUCTS (Not Used)

PART 3 - EXECUTION (Not Used)

END OF DOCUMENT 00 0102

SECTION 00 0110 - TABLE OF CONTENTS

PROCUREMENT AND CONSTRACTING REQUIREMENTS

DIVISION	SECTION TITLE	PAGES
00 0000	COVER SHEET	1-1
00 0102	PROJECT INFORMATION	1-2
00 1050	DAVIS BACON	1-6
00 0110	TABLE OF CONTENTS	1-4
00 0115	LIST OF DRAWING SHEETS	1-4
00 1116	INVITATION TO BID	1-2
00 0124	HUD SUPPLEMENTARY CONDITIONS	1-11
00 4133	BID FORM – COST-PLUS-FEE (SINGLE-PRIME CONTRACT)	1-3
00 4200	A201 CONTRACT	1-38
00 4373	PROPOSED SCHEDULE OF VALUES FORM	1-1
DIVISION 1 - GENERAL REQUIREMENTS		
01 1000	SUMMARY	1-2
01 2600	CONTRACT MODIFICATION PROCEDURES	1-2
01 2900	PAYMENT PROCEDURES	1-2
01 3100	PROJECT MANAGEMENT AND COORDINATION	1-7
01 3300	SUBMITTAL PROCEDURES	1-8
01 4000	QUALITY REQUIREMENTS	1-7
01 5000	TEMPORARY FACILITIES AND CONTROLS	1-3
01 6000	PRODUCT REQUIREMENTS	1-5
01 7419	CONSTRUCTION WASTE MANAGEMENT AND DISPOSAL	1-5
01 7700	CLOSE-OUT PROCEDURES	1-6
01 7823	OPERATION AND MAINTENANCE DATA	1-7
01 7900	DEMONSTRATION AND TRAINING	1-4
DIVISION 2 – EXISTING CONDITIONS		
02 3000	SUBSURFACE INVESTIGRATION	1-1
DIVISION 3 - CONCRETE		
03 0100	CONCRETE FORMING AND ACCESSORIES (MS-SF)	1-10
03 2000	CONCRETE REINFORCEMENT	1-5
03 3000	CAST-IN-PLACE CONCRETE	1-31
03 5413	GYPSUM CEMENT UNDERLAYMENT	1-3
DIVISION 4 - MASONRY		
04 2000	UNIT MASONRY	1-14
04 2200	CONCRETE UNIT MASONRY	1-13
DIVISION 5 – METALS		
05 1200	STRUCTURAL STEEL FRAMING	1-12
05 5000	METAL FABRICATIONS	1-14
05 5113	METAL PAN STAIRS	1-5
05 5213	PIPE AND TUBE RAILINGS	1-6
05 7300	DECORATIVE METAL RAILINGS	1-14
DIVISION 6 - WOOD AND PLASTICS		
06 1000	ROUGH CARPENTRY	1-14
06 1600	SHEATHING	1-11
06 1753	SHOP-FABRICATED WOOD TRUSSES	1-8
06 2023	INTERIOR FINISH CARPENTRY	1-3

SECTION 00 0110 - TABLE OF CONTENTS

DIVISION 7 - THERMAL AND MOISTURE PROTECTION

07 2100	THERMAL INSULATION	1-3
07 2500	WEATHER BARRIERS	1-3
07 3113	ASPHALT SHINGLES	1-5
07 3113.16	STANDING-SEAM METAL ROOF PANELS	1-13
07 4646	FIBER-CEMENT SIDING	1-3
07 6200	SHEET METAL FLASHING AND TRIM	1-10
07 7200	ROOF ACCESSORIES (MS-SF)	1-6
07 8400	FIRESTOPPING	1-4
07 8413	PENETRATION FIRESTOPPING	1-3
07 9200	JOINT SEALANTS	1-2

DIVISION 8 - DOORS AND WINDOWS

08 1113	HOLLOW METAL DOORS AND FRAMES	1-5
08 1416	FLUSH WOOD DOORS	1-3
08 1614	FIBERGLASS PATIO DOORS	1-6
08 3113	ACCESS DOORS AND FRAMES	1-2
08 5313	VINYL WINDOWS	1-5
08 7100	DOOR HARDWARE	1-10
08 8000	GLAZING	1-4
08 8300	MIRRORS	1-2

DIVISION 9 - FINISHES

09 2900	GYPSUM BOARD	1-5
09 3000	TILING	1-5
09 6519	RESILIENT TILE FLOORING	1-5
09 9100	PAINTING	1-7

DIVISION 10 - SPECIALTIES

10 2800	TOILET, BATH AND LAUNDRY ACCESSORIES	1-2
10 4413	FIRE PROTECTION CABINETS (MS-SF)	1-3
10 4416	FIRE EXTINGUISHERS (MS-SF)	1-3
10 5500.13	USPS-DELIVERY POSTAL SPECIALTIES	1-3
10 5623	WIRE STORAGE SHELVING	1-3

DIVISION 11 – EQUIPMENT

11 3100	RESIDENTIAL APPLIANCES	1-3

DIVISION 12 – FURNISHINGS

12 2113	HORIZONTAL LOUVER BLINDS	1-3
12 3530	RESIDENTIAL CASEWORK	1-4
12 3640	STONE COUNTERTOPS	1-3

DIVISION 13 - SPECIAL CONSTRUCTION
(NOT USED)

DIVISION 14 - CONVEYING SYSTEMS
(NOT USED)

DIVISION 20
(NOT USED)

SECTION 00 0110 - TABLE OF CONTENTS

DIVISION 21

21 0500	COMMON WORK RESULTS FOR FIRE SUPPRESSION	1-9
21 1313	WET PIPE SPRINKLER SYSTEMS	1-18

DIVISION 22 – PLUMBING

22 0500	COMMON WORK RESULTS FOR PLUMBING	1-9
22 0523	GENERAL DUTY VALUES FOR PLUMBING PIPING	1-16
22 0529	HANGERS AND SUPPORTS FOR PLUMBING PIPING AND EQUIPMENT	1-9
22 0553	IDENTIFICATION FOR PLUMBING PIPING AND EQUIPMENT	1-4
22 0700	PLUMBING INSULATION	1-14
22 1116	DOMESTIC WATER PIPING	1-13
22 1119	DOMESTIC WATER PIPING SPECIALTIES	1-11
22 1316	SANITARY WASTE AND VENT PIPING	1-6
22 1319	SANITARY WATER PIPING SPECIALTIES	1-9
22 1413	STORM DRAINAGE PIPING	1-5
22 1423	STORM DRAINAGE PIPING SPECIALTIES	1-4
22 3300	ELECTRIC DOMESTIC WATER HEATERS	1-7
22 4000	PLUMBING FIXTURES	1-6

DIVISION 23 – MECHANICAL

23 0500	COMMON WORK RESULTS FOR HVAC	1-9
23 0513	COMMON MOTOR REQUIREMENTS FOR HVAC EQUIPMENT	1-3
230548	VIBRATION AND SEISMIC CONTROLS FOR HVAC PIPING AND EQUIPMENT	1-9
23 0553	IDENTIFICATION FOR HVAC PIPING AND EQUIPMENT	1-5
23 0593	TESTING ADJUSTING AND BALANCING FOR HVAC	1-15
23 0700	HVAC INSULATION	1-40
23 0900	INSTRIMENTATION AND CONTROL FOR HVAC	1-21
23 0993	SEQUENCE OF OPERATIONS FOR HVAC CONTROLS	1-30
23 2113	HYDRONIC PIPING	1-30
23 2300	REFRIGERANT PIPING	1-17
23 3113	METAL DUCTS	1-32
23 3116	NON-METAL DUCTS	1-10
23 3300	AIR DUCT ACCESSORIES	1-27
23 3416	CENTRIFUGAL HVAC FANS	1-12
23 3423	HVAC POWER VENTILATORS	1-13
23 3713	DIFFUSERS REGISTARERS AND GRILLES	1-19
23 6200	PACKAGED COMPRESSOR AND CONDENSOR UNITS	1-9
23 8126	SPLIT SYSTEM AIR CONDITIONERS	1-6
23 8239	UNIT HEATERS	1-17

DIVISION 26 – ELECTRICAL

26 0500	COMMON WORK RESULTS	1-5
26 0501	SCOPE OF WORK	1-2
26 0502	BASIC MATERIALS AND METHODS	1-3
26 0519	CONDUCTORS	1-3
26 0526	GROUNDING	1-2
26 0529	SUPPORTING DEVICES	1-2
26 0533	RACEWAYS	1-5
26 0534	OUTLET BOXES	1-3
26 0553	IDENTIFICATION FOR ELECTRICAL SYSTEMS	1-8
26 2416	BRANCH CIRCUIT PANELBOARDS AND LOAD CENTERS	1-3

SECTION 00 0110 - TABLE OF CONTENTS

26 2713	ELECTICITY METERING, MODULAR MULTI-TENANT	1-3
26 2726	WIRING DEVICES	1-3
26 2817	DISCONNECT SWITCH	1-2
26 5100	LIGHTS	1-3
26 5113	INTERIOR LIGHTING FIXTURES, LAMPS AND BALLAST	1-3
26 6100	TECHNOLOGY EQUIPEMENT RACEWAYS	1-3

DIVISION 28 – ELECTRICAL SAFETY AND SECURITY

28 3111	FIRE ALARM SYSTEM	1-9

DIVISION 31

31 2000	EARTH MOVING (MS-SF)	1-4
31 3116	TERMITE CONTROL (MS-SF)	1-4

Appendix A – Geotech Report

END OF SECTION 00 0110

00 0115 - LIST OF DRAWINGS

SHEET NO.	SHEET TITLE
General	Cover Sheet / Project Team
A0.1	Drawing Index
A0.2a	Rated Assemblies - Wall
A0.2b	Rated Assemblies - Ceiling / Floor
A0.2c	Rated Assemblies - Penetrations
A0.2d	Rated Assemblies - Penetrations
A0.3a	Code Data & Building Data
A0.3b	Life Safety Plan
A0.4a	Site Plan – Aerial
A0.4b	Phase & Utilities Plan
A0.4c	Architectural Site Plan
A0.5a	ADA & ANSI Accessibility Details for Dwelling Units/ Public Facilities
A0.5b	ADA & ANSI Accessibility Details for Dwelling Units/ Public Facilities
A0.5c	ADA & ANSI Accessibility Details for Dwelling Units/ Public Facilities
A0.5d	ADA & ANSI Accessibility Details for Dwelling Units/ Public Facilities
A0.5e	ANSI Accessibility Guidelines & Details for Dwelling Units – Unit - Type A
A0.5f	ANSI Accessibility Guidelines & Details for Dwelling Units – Unit - Type B
Architectural	
A1.0a	Door/Hardware & Window Schedules, General Notes & Typical Unit Details
A1.0b	General Notes, Typical Unit Details & Finish Schedule
A1.1a	Unit B1 - Floor Plans, Interior Elevations, Alts & General Notes
A1.1b	Unit B1 - Interior Elevations, Alts & General Notes
A1.1c	Unit B1 - Type 'A' - Floor Plans, Interior Elevations & General Notes
A1.2	Unit B2 - Interior Elevations, Alts & General Notes
A1.3	Unit C1 - Floor Plans, Interior Elevations & General Notes
A1.4a	Unit C2 - Floor Plans, Interior Elevations & General Notes
A1.4b	Unit C2 - Interior Elevations & General Notes
A1.4c	Unit C2 - Type 'A' - Floor Plans, Interior Elevations & General Notes
A1.4d	Unit C2 - Type 'A' - Interior Elevations & General Notes
A2.10	Building 1 – Slab Plan
A2.11	Building 1 – First Level Floor Plan
A2.12	Building 1 – Second Level Floor Plan
A2.13	Building 1 – Third Level Floor Plan
A2.14	Building 1 – Roof Plan & Drainage Plan
A2.20	Building 2 – Slab Plan
A2.21	Building 2 – First Level Floor Plan
A2.22	Building 2 – Second Level Floor Plan
A2.23	Building 2 – Third Level Floor Plan
A2.24	Building 2 – Roof Plan & Drainage Plan
A2.3	Roof Details
A2.4	Roof Sections
A3.0a	Exterior Enlarged Elevations
A3.0b	Balcony Perspectives
A3.1	Exterior Elevations – Building 1
A3.2	Exterior Elevations – Building 2
A4.0	Typical Stair Details
A4.1a	Building 1 – Breezeway Stairs - Plans
A4.1b	Building 1 – Breezeway Stairs - Section
A4.2a	Building 2 – Breezeway Stairs - Plans

00 0115 - LIST OF DRAWINGS

SHEET NO.	SHEET TITLE
A4.2b	Building 2 – Breezeway Stairs – Section
A5.0a	Typical Details
A5.0b	Brick Details
A5.0c	Stone Details
A5.0d	Panel & Lap Details
A5.0e	Balcony Details
A5.0f	Roof, Eave & Transition Details
A5.1a	Typical Exterior Wall Sections
A5.1b	Typical Exterior Wall Sections
A5.1c	Typical Exterior Wall Sections
A5.1d	Typical Exterior Wall Sections
A5.2	Typical Exterior Wall Sections
A6.1	Pool Baths & Equipment Room – Floor Plans & Interior Elevations & Public Schedule

Structural

S0.1	Cover Sheet & General Notes
S0.2	General Schedules
S0.3	Special Inspection Tables
S0.4	Rebar Development Schedules
S1.11	Foundation Plan – Building 1
S1.21	Foundation Plan – Building 2
S2.1	Typical Foundation Details
S2.2	Foundation Details
S3.11	Second Floor Framing Plan – Building 1
S3.12	Third Floor Framing Plan – Building 1
S3.13	Roof Framing Plan – Building 1
S3.21	Second Floor Framing Plan – Building 2
S3.22	Third Floor Framing Plan – Building 2
S3.23	Roof Framing Plan – Building 2
S4.1	Shear Wall Layout Plan – Building 1
S4.2	Shear Wall Layout Plan – Building 2
S4.3	Shear Wall Schedules
S4.4	Shear Wall Details
S5.1	Typical Wood Framing Details
S5.2	Typical Wood Framing Details
S5.3	Wood Framing Details
S5.4	Pitched Roof Framing Details
S5.5	Pitched Roof Framing Details

Mechanical

M0.1	Mechanical General Notes & Legends
M0.2	Mechanical Schedules
M0.3	Mechanical Details
M0.4	Mechanical Details
M0.5	Mechanical Details
M0.6	Firestop Details
M0.7	Firestop Details & Mechanical Details
M1.01	Unit Plans
M1.02	Unit Plans
M2.11	Building 1 – Level 1

00 0115 - LIST OF DRAWINGS

SHEET NO.	SHEET TITLE
M2.12	Building 1 – Level 2
M2.13	Building 1 – Level 3
M2.14	Building 1 – Roof
M2.21	Building 2 – Level 1
M2.22	Building 2 – Level 2
M2.23	Building 2 – Level 3
M2.24	Building 2 – Roof

Electrical

E0.01	Electrical Notes, Legends, Abbreviations
E0.02	Lighting Fixture Schedule
E0.03	Electrical Specifications
E0.4A	Hilti Details
E0.4B	Hilti Details
E0.4C	Hilti Details
E0.4D	Hilti Details
E0.4E	Hilti Details
E0.4F	Hilti Details
E0.05	Fire Alarm Riser Diagrams
E0.06	Electrical Site Plan
E1.01	Unit Plans
E1.02	Unit Plans
E1.03	Unit Plans
E2.11	Building 1 – Level 1
E2.12	Building 1 – Level 2
E2.13	Building 1 – Level 3
E2.14	Building 1 – Roof
E2.21	Building 2 – Level 1
E2.22	Building 2 – Level 2
E2.23	Building 2 – Level 3
E2.24	Building 2 – Roof
E5.01	Partial Riser Diagram
E5.02	Partial Riser Diagram
E6.01	Electrical Panel Schedules
E6.02	Electrical Panel Schedules

Plumbing

P0.1	Plumbing Schedule
P0.2	Plumbing Details
P0.3	Plumbing Details
P1.1	Unit Plans
P1.2	Unit Plans
P1.3	Unit Plans
P1.4	Unit Plans
P1.5	Unit Plans
P1.6	Unit Plans
P2.11	Building 1 – Level 1
P2.12	Building 1 – Level 2
P2.13	Building 1 – Level 3
P2.14	Building 1 – Roof

00 0115 - LIST OF DRAWINGS

SHEET NO.	SHEET TITLE
P2.21	Building 2 – Level 1
P2.22	Building 2 – Level 2
P2.23	Building 2 – Level 3
P2.24	Building 2 – Roof

Fire Protection

FP0.1	Fire Protection

Civil

C-000	Cover Sheet
C-001	General Notes
C-120	Erosion Control Plan
C-130	Site Dimension and Utility Plan
C-131	Overall Street and Parking Plan
C-132	Lighting and Photometric Plan
C-133	Drainage Area Map
C-140	Grading Plan
C-150	Landscape Plan
C-200	Utility Profiles
C-201	Utility Profiles
C-500	Site Details
C-501	Water Details
C-502	Sanitary Sewer Details
C-503	Erosion & Sediment Control Details
C-504	Miscellaneous Details
C-504	Miscellaneous Details

END OF SECTION 00 0115

SUPPLEMENTARY CONDITIONS TO THE CONSTRUCTION CONTRACT

U.S. Department of Housing and Urban Development
Office of Housing

OMB Approval No. 2502-0598
(Exp. 9/30/2021)

Public Reporting Burden for this collection of information is estimated to average 0.2 hours per response, including the time for reviewing instructions, searching existing data sources, gathering and maintaining the data needed, and completing and reviewing the collection of information. Response to this request for information is required in order to receive the benefits to be derived. This agency may not collect this information, and you are not required to complete this form unless it displays a currently valid OMB control number. While no assurance of confidentiality is pledged to respondents, HUD generally discloses this data only in response to a Freedom of Information Act request.

Warning: Federal law provides that anyone who knowingly or willfully submits (or causes to submit) a document containing any false, fictitious, misleading, or fraudulent statement/certification or entry may be criminally prosecuted and may incur civil administrative liability. Penalties upon conviction can include a fine and imprisonment, as provided pursuant to applicable law, which includes, but is not limited to, 18 U.S.C. 1001, 1010, 1012; 31 U.S.C. 3729, 3802, 24 C.F.R. Parts 25, 28 and 30, and 2 C.F.R. Parts 180 and 2424.

Article 1: Labor Standards

A. **Applicability.** The Project or program to which the construction work covered by this Contract pertains is being assisted or insured by the United States of America, and the following Federal Labor Standards Provisions are included in this Contract or related instrument pursuant to the provisions applicable to such Federal assistance or insurance. Any statute or regulation contained herein shall also include any subsequent amendment or successor statute or regulation. The terms of this Supplementary Conditions to the Construction Contract (HUD-92554M) takes precedence over all provisions of the “General Conditions of the Contract for Construction” (AIA Document A201) inconsistent with said Supplementary Conditions.

B. **Minimum Wages.** Pursuant to Section 212 of the National Housing Act, as amended, 12 U.S.C. 1715c, the minimum wage provisions contained in this paragraph B do not apply to those projects with Security Instruments insured under Section 221(h)(1) designed for less than 9 families and they do not apply to those projects with Security Instruments insured under either Section 220 or 233 designed for less than 12 families.

1. (i) All laborers and mechanics employed or working upon the site of the work (or under the United States Housing Act of 1937 or under the Housing Act of 1949 in the construction or development of the Project) shall be paid unconditionally and not less often than once a week, and without subsequent deduction or rebate on any account (except such payroll deductions as are permitted by regulations issued by the Secretary of Labor under the Copeland Act (29 CFR Part 3)), the full amount of wages and bona fide fringe benefits (or cash equivalents thereof) due at time of payment computed at rates not less than those contained in the wage determination of the Secretary of Labor which is attached hereto and made a part hereof, regardless of any contractual relationship which may be alleged to exist between the Contractor and such laborers and mechanics. Contributions made or costs reasonably anticipated for bona fide fringe benefits under Section 1 (b)(2) of the Davis-Bacon Act (40 U.S.C. 3141(2)(B)(ii)) on behalf of laborers or mechanics are considered wages paid to such laborers or

mechanics, subject to the provisions of 29 CFR 5.5(a)(1)(iv); also, regular contributions made or costs incurred for more than a weekly period (but not less often than quarterly) under plans, funds, or programs, which cover the particular weekly period, are deemed to be constructively made or incurred during such weekly period. Such laborers and mechanics shall be paid the appropriate wage rate and fringe benefits on the wage determination for the classification of work actually performed, without regard to skill, except as provided in 29 CFR 5.5(a)(4). Laborers or mechanics performing work in more than one classification may be compensated at the rate specified for each classification for the time actually worked therein: *Provided,* that the employer's payroll records accurately set forth the time spent in each classification in which work is performed. The wage determination (including any additional classification and wage rates conformed under 29 CFR 5.5(a)(1)(ii)) and the Davis-Bacon poster (WH-1321) shall be posted at all times by the Contractor and its subcontractors at the site of the work in a prominent and accessible place where it can be easily seen by the workers.

(ii) (a) Any class of laborers or mechanics that is not listed in the wage determination and that is to be employed under this Contract shall be classified in conformance with the wage determination. HUD shall approve an additional classification and wage rate and fringe benefits only when the following criteria have been met:

(1) The work to be performed by the classification requested is not performed by a classification in the wage determination; and

(2) The classification is utilized in the area by the construction industry; and

(3) The proposed wage rate, including any bona fide fringe benefits, bears a reasonable relationship to the wage rates contained in the wage determination.

(b) If the Contractor and the laborers and mechanics to be employed in the classification (if known), or their representatives, and HUD or its designee agree on the classification and wage rate (including the amount designated for fringe benefits where appropriate), a report of the action taken shall be sent by HUD or its designee to the Administrator of the Wage and Hour Division, U.S. Department of Labor, Washington, D.C. 20210 (**"Administrator"**). The Administrator, or an authorized representative, shall approve, modify, or disapprove every additional classification action within thirty (30) days of receipt and so advise HUD or its designee or shall notify HUD or its designee within the thirty (30) day period that additional time is necessary.

(c) In the event the Contractor, the laborers or mechanics to be employed in the classification or their representatives and HUD or its designee do not agree on the proposed classification and wage rate (including the amount designated for fringe benefits, where appropriate), HUD or its designee shall refer the questions, including the views of all interested parties and the recommendation of HUD or its designee, to the Administrator for determination. The Administrator, or an authorized representative, shall issue a determination within thirty (30) days of receipt and so advise HUD or its

designee or shall notify HUD or its designee within the thirty (30) day period that additional time is necessary.

(d) The wage rate (including fringe benefits where appropriate) determined pursuant to subparagraphs B.1.(ii)(b) or (c) of this Article, shall be paid to all workers performing work in the classification under this Contract from the first day on which work is performed in the classification.

(iii) Whenever the minimum wage rate prescribed in the Contract for a class of laborers or mechanics includes a fringe benefit that is not expressed as an hourly rate, the Contractor shall either pay the benefit as stated in the wage determination or shall pay another bona fide fringe benefit or an hourly cash equivalent thereof.

(iv) If the Contractor does not make payments to a trustee or other third person, the Contractor may consider as part of the wages of any laborer or mechanic the amount of any costs reasonably anticipated in providing bona fide fringe benefits under a plan or program, *Provided*, That the Secretary of Labor has found, upon the written request of the Contractor, that the applicable standards of the Davis-Bacon Act have been met. The Secretary of Labor may require the Contractor to set aside in a separate account assets for the meeting of obligations under the plan or program.

2. **Withholding.** HUD or its designee shall upon its own action or upon written request of an authorized representative of the Department of Labor withhold or cause to be withheld from the Contractor under this Contract or any other Federal contract with the same prime contractor, or any other Federally-assisted contract subject to Davis-Bacon prevailing wage requirements, which is held by the same prime contractor, so much of the accrued payments or advances as may be considered necessary to pay laborers and mechanics, including apprentices, trainees and helpers, employed by the Contractor or any subcontractor the full amount of wages required by the Contract. In the event of failure to pay any laborer or mechanic, including any apprentice, trainee or helper, employed or working on the site of the work (or under the United States Housing Act of 1937 or under the Housing Act of 1949 in the construction or development of the Project), all or part of the wages required by the Contract, HUD or its designee may, after written notice to the Contractor, sponsor, applicant, or Owner, take such action as may be necessary to cause the suspension of any further payment, advance, or guarantee of funds until such violations have ceased. HUD or its designee may, after written notice to the Contractor, disburse such amounts withheld for and on account of the Contractor or subcontractor to the respective employees to whom they are due.

3. **Payrolls, records, and certifications.**

(i) Payrolls and basic records relating thereto shall be maintained by the Contractor during the course of the work and preserved for a period of three years thereafter for all laborers and mechanics working at the site of the work (or under the United States Housing Act of 1937, or under the Housing Act of 1949, in the construction or development of the Project). Such records shall contain the name, address, and social security number of each such worker, his or her correct

classification, hourly rates of wages paid (including rates of contributions or costs anticipated for bona fide fringe benefits or cash equivalents thereof of the types described in Section 1 (b)(2)(B) of the Davis-Bacon Act (40 U.S.C. 3141(2)(B)(ii))), daily and weekly number of hours worked, deductions made and actual wages paid. Whenever the Secretary of Labor has found under 29 CFR 5.5(a)(1)(iv) that the wages of any laborer or mechanic include the amount of any costs reasonably anticipated in providing benefits under a plan or program described in Section 1 (b)(2)(B) of the Davis-Bacon Act (40 U.S.C. 3141(2)(B)(ii)), the Contractor shall maintain records which show that the commitment to provide such benefits is enforceable, that the plan or program is financially responsible, and that the plan or program has been communicated in writing to the laborers or mechanics affected, and records which show the costs anticipated or the actual cost incurred in providing such benefits. Contractors employing apprentices or trainees under approved programs shall maintain written evidence of the registration of apprenticeship programs and certification of trainee programs, the registration of the apprentices and trainees, and the ratios and wage rates prescribed in the applicable programs.

(ii)(a) The Contractor shall submit weekly for each week in which any contract work is performed a copy of all payrolls to HUD or its designee if the agency is a party to the Contract, but if the agency is not such a party, the Contractor shall submit the payrolls to the applicant, sponsor, or Owner, as the case may be, for transmission to HUD or its designee. The payrolls submitted shall set out accurately and completely all of the information required to be maintained under 29 CFR 5.5(a)(3)(i), except that full social security numbers and home addresses shall not be included on weekly transmittals. Instead the payrolls shall only need to include an individually identifying number for each employee (e.g., the last four digits of the employee's social security number). The required weekly payroll information may be submitted in any form desired, whether paper (Optional Form WH-347 is available for this purpose from the Wage and Hour Division Web site at http://www.dol.gov/whd/forms/wh347.pdf or its successor site), or electronically pursuant to Program Obligations. The prime contractor is responsible for the submission of copies of payrolls by all subcontractors. Contractors and subcontractors shall maintain the full social security number and current address of each covered worker, and shall provide them upon request to HUD or its designee if the agency is a party to the Contract, but if the agency is not such a party, the Contractor will submit the payrolls to the applicant sponsor, or Owner, as the case may be, for transmission to HUD or its designee, the Contractor, or the Wage and Hour Division of the Department of Labor for purposes of an investigation or audit of compliance with prevailing wage requirements. It is not a violation of this subparagraph for a prime contractor to require a subcontractor to provide addresses and social security numbers to the prime contractor for its own records, without weekly submission to HUD or its designee.

(b) Each payroll submitted shall be accompanied by a "Statement of Compliance," signed by the Contractor or subcontractor or his or her agent who pays or

supervises the payment of the persons employed under the Contract and shall certify the following:

(1) That the payroll for the payroll period contains the information required to be provided under 29 CFR 5.5(a)(3)(ii), the appropriate information is being maintained under 29 CFR 5.5(a)(3)(i), and that such information is correct and complete.
(2) That each laborer or mechanic (including each helper, apprentice, and trainee) employed on the Contract during the payroll period has been paid the full weekly wages earned, without rebate, either directly or indirectly, and that no deductions have been made either directly or indirectly from the full wages earned, other than permissible deductions as set forth in 29 CFR Part 3;

(3) That each laborer or mechanic has been paid not less than the applicable wage rates and fringe benefits or cash equivalents for the classification of work performed, as specified in the applicable wage determination incorporated into the Contract.

(c) The weekly submission of a properly executed certification set forth on the reverse side of Optional Form WH-347 shall satisfy the requirement for submission of the "Statement of Compliance" required by subparagraph B.3.(ii)(b) of this Article.

(d) The falsification of any of the above certifications may subject the Contractor or subcontractor to civil or criminal prosecution under Section 1001 of Title 18 and Sections 3801 et seq of Title 31 of the United States Code.

(iii) The Contractor or subcontractor shall make the records required under subparagraph B.3.(i) of this Article available for inspection, copying, or transcription by authorized representatives of HUD or its designee or the Department of Labor, and shall permit such representatives to interview employees during working hours on the job. If the Contractor or subcontractor fails to submit the required records or to make them available, HUD or its designee may, after written notice to the Contractor, sponsor, applicant, or Owner, take such action as may be necessary to cause the suspension of any further payment, advance, or guarantee of funds. Furthermore, failure to submit the required records upon request or to make such records available may be grounds for debarment action pursuant to 29 CFR 5.12.

4. **Apprentices and Trainees.**

(i) **Apprentices.** Apprentices shall be permitted to work at less than the predetermined rate for the work they performed when they are employed pursuant to and individually registered in a bona fide apprenticeship program registered with the U.S. Department of Labor, Employment and Training Administration, Office of Apprenticeship, or with a State Apprenticeship Agency recognized by such Office, or if a person is employed in his or her first ninety (90) days of probationary employment as an apprentice in such an apprenticeship program, who is not individually registered in the

program, but who has been certified by the Office of Apprenticeship, or a State Apprenticeship Agency (where appropriate) to be eligible for probationary employment as an apprentice. The allowable ratio of apprentices to journeymen on the job site in any craft classification shall not be greater than the ratio permitted to the Contractor as to the entire work force under the registered program. Any worker listed on a payroll at an apprentice wage rate, who is not registered or otherwise employed as stated above, shall be paid not less than the applicable wage rate on the wage determination for the classification of work actually performed. In addition, any apprentice performing work on the job site in excess of the ratio permitted under the registered program shall be paid not less than the applicable wage rate on the wage determination for the work actually performed. Where the Contractor is performing construction on a project in a locality other than that in which its program is registered, the ratios and wage rates (expressed in percentages of the journeyman's hourly rate) specified in the Contractor's or subcontractor's registered program shall be observed. Every apprentice must be paid at not less than the rate specified in the registered program for the apprentice's level of progress, expressed as a percentage of the journeymen hourly rate specified in the applicable wage determination. Apprentices shall be paid fringe benefits in accordance with the provisions of the apprenticeship program. If the apprenticeship program does not specify fringe benefits, apprentices must be paid the full amount of fringe benefits listed on the wage determination for the applicable classification. If the Administrator determines that a different practice prevails for the applicable apprentice classification, fringes shall be paid in accordance with that determination. In the event the Office of Apprenticeship, or a State Apprenticeship Agency recognized by such Office, withdraws approval of an apprenticeship program, the Contractor shall no longer be permitted to utilize apprentices at less than the applicable predetermined rate for the work performed until an acceptable program is approved.

(ii) **Trainees.** Except as provided in 29 CFR 5.16, trainees shall not be permitted to work at less than the predetermined rate for the work performed unless they are employed pursuant to and individually registered in a program which has received prior approval, evidenced by formal certification by the U.S. Department of Labor, Employment and Training Administration. The ratio of trainees to journeymen on the job site shall not be greater than permitted under the plan approved by the Employment and Training Administration. Every trainee must be paid at not less than the rate specified in the approved program for the trainee's level of progress, expressed as a percentage of the journeyman's hourly rate specified in the applicable wage determination. Trainees shall be paid fringe benefits in accordance with the provisions of the trainee program. If the trainee program does not mention fringe benefits, trainees shall be paid the full amount of fringe benefits listed on the wage determination unless the Administrator of the Wage and Hour Division determines that there is an apprenticeship program associated with the corresponding journeyman wage rate on the wage determination which provides for less than full fringe benefits for apprentices. Any employee listed on the payroll at a trainee rate who is not registered and participating in a training plan approved by the Employment and Training Administration shall be paid not less than the applicable wage rate on the wage determination for the classification of work actually performed. In addition, any trainee performing work on

the job site in excess of the ratio permitted under the registered program shall be paid not less than the applicable wage rate on the wage determination for the work actually performed. In the event the Employment and Training Administration withdraws approval of a training program, the Contractor shall no longer be permitted to utilize trainees at less than the applicable predetermined rate for the work performed until an acceptable program is approved.

(iii) **Equal employment opportunity.** The utilization of apprentices, trainees and journeymen under 29 CFR Part 5 shall be in conformity with the equal employment opportunity requirements of Executive Order 11246, as amended, and 29 CFR Part 30.

5. **Compliance with Copeland Act Requirements.** The Contractor shall comply with the requirements of 29 CFR Part 3, which are incorporated by reference in this Contract.

6. **Subcontracts.** The Contractor or subcontractor shall insert in any subcontracts the clauses set forth in subparagraphs 1 through 10 of this paragraph B and such other clauses as HUD or its designee may by appropriate instructions require, and a copy of the applicable prevailing wage determination, and also a clause requiring the subcontractors to include these clauses in any lower tier subcontracts. The prime contractor shall be responsible for the compliance by any subcontractor or lower tier subcontractor with all Contract clauses referenced in this subparagraph.

7. **Contract termination and debarment.** A breach of the Contract clauses in 29 CFR 5.5 may be grounds for termination of the Contract, and for debarment as a contractor or a subcontractor as provided in 29 CFR 5.12.

8. **Compliance with Davis-Bacon and Related Act Requirements.** All rulings and interpretations of the Davis-Bacon and Related Acts contained in 29 CFR Parts 1, 3, and 5 are herein incorporated by reference in this Contract.

9. **Disputes concerning labor standards.** Disputes arising out of the labor standards provisions of this Contract shall not be subject to the general disputes clause of this Contract. Such disputes shall be resolved in accordance with the procedures of the Department of Labor set forth in 29 CFR Parts 5, 6, and 7. Disputes within the meaning of this clause include disputes between the Contractor (or any of its subcontractors) and HUD or its designee, the U.S. Department of Labor, or the employees or their representatives.

10. **Certification of Eligibility.**

(i) By entering into this Contract, the Contractor certifies that neither it (nor he or she) nor any person or firm who has an interest in the Contractor's firm is a person or firm ineligible to be awarded Government contracts by virtue of Section 3(a) of the Davis-Bacon Act (40 U.S.C. 3144(b)(2)) or 29 CFR 5.12(a)(1) or to be awarded HUD contracts or participate in HUD programs pursuant to 24 CFR Part 24.

(ii) No part of this Contract shall be subcontracted to any person or firm ineligible for award of a Government contract by virtue of Section 3(a) of the Davis-Bacon Act (40 U.S.C. 3144(b)(2)) or 29 CFR 5.12(a)(1) or to be awarded HUD contracts or participate in HUD programs pursuant to 24 CFR Part 24.

(iii) The penalty for making false statements is prescribed in the U.S. Criminal Code, 18 U.S.C. 1001. Additionally, U.S. Criminal Code, Section 1010, Title 18, U.S.C., “Federal Housing Administration transactions”, provides in part: “Whoever, for the purpose of . . . influencing in any way the action of such Department . . . makes, passes, utters or publishes any statement, knowing the same to be false . . . shall be fined under this title or imprisoned not more than two years, or both.”

C. **Contract Work Hours and Safety Standards Act.**

1. **Applicability and Definitions.** This paragraph C of Article 1 is applicable only if a direct form of federal assistance is involved, such as Section 8, Section 202/811 Capital Advance, grants etc., and is applicable only where the prime contract is in an amount greater than $100,000. As used in this paragraph C, the terms "laborers" and "mechanics" include watchmen and guards.

2. **Overtime requirements.** No contractor or subcontractor contracting for any part of the Contract work that may require or involve the employment of laborers or mechanics shall require or permit any such laborer or mechanic in any workweek in which he or she is employed on such work to work in excess of forty (40) hours in such workweek unless such laborer or mechanic receives compensation at a rate not less than one and one-half times the basic rate of pay for all hours worked in excess of forty (40) hours in such workweek.

3. **Violation; liability for unpaid wages; liquidated damages.** In the event of any violation of the immediately preceding subparagraph C.2, the Contractor and any subcontractor responsible therefore shall be liable for the unpaid wages. In addition, the Contractor and subcontractor shall be liable to the United States (in the case of work done under contract for the District of Columbia or a territory, to such District or to such territory) for liquidated damages. Such liquidated damages shall be computed with respect to each individual laborer or mechanic, including watchmen and guards, employed in violation of such subparagraph, in the sum of $10 for each calendar day on which such individual was required or permitted to work in excess of the standard workweek of forty (40) hours without payment of the overtime wages required by the clause set forth in such subparagraph.

4. **Withholding for unpaid wages and liquidated damages.** HUD or its designee shall, upon its own action or upon written request of an authorized representative of the Department of Labor, withhold or cause to be withheld from any moneys payable on account of work performed by the Contractor or subcontractor under any such contract, or under any other Federal contract with the same prime contractor, or under any other Federally-assisted contract subject to the Contract Work

Hours and Safety Standards Act which is held by the same prime contractor such sums as may be determined to be necessary to satisfy any liabilities of such Contractor or subcontractor for unpaid wages and liquidated damages as provided in the clause set forth in subparagraph 3 of this paragraph C.

5. **Subcontracts.** The Contractor or subcontractor shall insert in any subcontracts the clauses set forth in subparagraphs 1 through 5 of this paragraph C and also a clause requiring the subcontractors to include these clauses in any lower tier subcontracts. The prime contractor shall be responsible for compliance by any subcontractor or lower tier subcontractor with the clauses set forth in such subparagraphs 1 through 5.

D. **Certification.**

For projects with Security Instruments insured under the National Housing Act, as amended, that are subject to paragraph B of this Article 1, the Contractor is required to execute the Contractor's Prevailing Wage Certificate within HUD-92448 as a condition precedent to insurance by HUD of the Loan, or an advance thereof, made or to be made by the Lender in connection with the construction of the Project.

Article 2: Equal Employment Opportunity

A. **Applicability.** This Article 2 applies to any contract for construction work, or modification thereof, as defined in the regulations of the Secretary of Labor at 41 CFR Chapter 60, which is paid for in whole or in part with funds obtained from the Federal Government or borrowed on the credit of the Federal Government pursuant to a grant, contract, loan insurance, or guarantee, or undertaken pursuant to any Federal program involving such grant, contract, loan, insurance, or guarantee.

B. The Contractor shall not discriminate against any employee or applicant for employment because of race, color, religion, sex, sexual orientation, gender identity, disability, or national origin. The Contractor shall take affirmative action to ensure that applicants are employed, and that employees are treated during employment without regard to their race, color, religion, sex, sexual orientation, gender identity, disability or national origin. Such action shall include, but not be limited to the following: employment, upgrading, demotion, or transfer; recruitment or recruitment advertising; layoff or termination; rates of pay or other forms of compensation; and selection for training including apprenticeship. The Contractor agrees to post in conspicuous places available to employees and applicants for employment notices to be provided setting forth the provisions of this nondiscrimination clause.

C. The Contractor shall, in all solicitations or advertisements for employees placed by or on behalf of the Contractor state that all qualified applicants shall receive consideration for employment without regard to race, color, religion, sex, sexual orientation, gender identity, disability, or national origin.

D. The Contractor shall send to each labor union or representative of workers with which it has a collective bargaining agreement or other contract or understanding a

notice to be provided advising the said labor union or workers representatives of the Contractor's commitments hereunder, and shall post copies of the notice in conspicuous places available to employees and applicants for employment.

E. The Contractor shall comply with all provisions of Executive Order 11246 of September 24, 1965 and of the rules, regulations, and relevant orders of the Secretary of Labor.

F. The Contractor shall furnish all information and reports required by Executive Order 11246 of September 24, 1965, and by rules, regulations, and orders of the Secretary of Labor, or pursuant thereto, and shall permit access to its books, records, and accounts by the Secretary of Labor for purposes of investigation to ascertain compliance with such rules, regulations, and orders.

G. In the event of the Contractor's noncompliance with the nondiscrimination clauses of this Contract or with any of the said rules, regulations, or orders, this Contract may be canceled, terminated, or suspended in whole or in part and Contractor may be declared ineligible for further government contracts or federally assisted construction contracts in accordance with procedures authorized in Executive Order 11246 of September 24, 1965, and such other sanctions may be imposed and remedies invoked as provided in Executive Order 11246 of September 24, 1965, or by rule, regulations or order of the Secretary of Labor, or as otherwise provided by law.

H. The Contractor shall include the provisions of paragraphs A through H of this Article 2 in every subcontract or purchase order unless exempted by rules, regulations, or orders of the Secretary of Labor issued pursuant to Section 204 of Executive Order 11246 of September 24, 1965, so that such provisions shall be binding upon each subcontractor or vendor. The Contractor shall take such action with respect to any subcontract or purchase order as HUD or the Secretary of Labor may direct as a means of enforcing such provisions, including sanctions for noncompliance. *Provided, however,* that in the event the Contractor becomes involved in, or is threatened with, litigation with a subcontractor or vendor as a result of such direction by HUD or the Secretary of Labor, the Contractor may request the United States to enter into such litigation to protect the interests of the United States.

Article 3: Equal Opportunity for Businesses and Lower Income Persons Located Within the Project Area

A. This Article 3 is applicable to projects covered by Section 3, as defined in 24 CFR Part 135.

B. The work to be performed under this Contract is on a project assisted under a program providing Federal financial assistance from HUD and is subject to the requirements of Section 3 of the Housing and Urban Development Act of 1968, as amended, 12 U.S.C. 1701u. Section 3 requires that to the greatest extent feasible opportunities for training and employment be given to low and very-low income residents of the unit of local government or the metropolitan area (or non-metropolitan county) as determined by HUD in which the Project is located and contracts for work in connection with the Project be awarded to business concerns which are located in, or owned in substantial part by persons residing in the same metropolitan area (or non-metropolitan county) as the Project.

Article 4: Health and Safety

A. This Article 4 is applicable only where the prime contract is in an amount greater than $100,000.

B. No laborer or mechanic shall be required to work in surroundings or under working conditions which are unsanitary, hazardous, or dangerous to his or her health and safety as determined under construction safety and health standards promulgated by the Secretary of Labor by regulation.

C. The Contractor shall comply with all regulations issued by the Secretary of Labor pursuant to 29 CFR Part 1926, and failure to comply may result in imposition of sanctions pursuant to the Contract Work Hours and Safety Standards Act, 40 USC 3701 et seq.

D. The Contractor shall include the provisions of this Article 4 in every subcontract so that such provisions shall be binding on each subcontractor. The Contractor shall take such action with respect to any subcontract as HUD or the Secretary of Labor shall direct as a means of enforcing such provisions.

"General Decision Number: VA20250150 09/19/2025

Superseded General Decision Number: VA20240150

State: Virginia

Construction Type: Residential

Counties: Botetourt, Craig, Franklin, Roanoke, Roanoke* and Salem* Counties in Virginia.

*INDEPENDENT CITIES

RESIDENTIAL CONSTRUCTION PROJECTS (consisting of single family homes and apartments up to and including 4 stories).

Note: Contracts subject to the Davis-Bacon Act are generally required to pay at least the applicable minimum wage rate required under Executive Order 14026 or Executive Order 13658. Please note that these Executive Orders apply to covered contracts entered into by the federal government that are subject to the Davis-Bacon Act itself, but do not apply to contracts subject only to the Davis-Bacon Related Acts, including those set forth at 29 CFR 5.1(a)(1).

If the contract is entered into on or after January 30, 2022, or the contract is renewed or extended (e.g., an option is exercised) on or after January 30, 2022:	. Executive Order 14026 generally applies to the contract. . The contractor must pay all covered workers at least $17.75 per hour (or the applicable wage rate listed on this wage determination, if it is higher) for all hours spent performing on the contract in 2025.
If the contract was awarded on or between January 1, 2015 and January 29, 2022, and the contract is not renewed or extended on or after January 30, 2022:	. Executive Order 13658 generally applies to the contract. . The contractor must pay all covered workers at least $13.30 per hour (or the applicable wage rate listed on this wage determination, if it is higher) for all hours spent performing on that contract in 2025.

The applicable Executive Order minimum wage rate will be adjusted annually. If this contract is covered by one of the Executive Orders and a classification considered necessary for performance of work on the contract does not appear on this wage determination, the contractor must still submit a conformance request.

Additional information on contractor requirements and worker

protections under the Executive Orders is available at
http://www.dol.gov/whd/govcontracts.

Modification Number	Publication Date
0	01/03/2025
1	09/19/2025

* ENGI0147-012 06/01/2025

	Rates	Fringes
POWER EQUIPMENT OPERATOR		
Cranes 90 tons & over capacity; Tower & Climbing Cranes with Controls 100 ft. above ground	$ 40.99	18.05
Cranes under 90 tons	$ 39.99	18.05

---

* SUVA2012-029 08/08/2014

	Rates	Fringes
BRICKLAYER	$ 16.35 **	0.00
CARPENTER	$ 12.60 **	0.00
CEMENT MASON/CONCRETE FINISHER	$ 16.84 **	0.00
ELECTRICIAN	$ 16.34 **	0.00
IRONWORKER, ORNAMENTAL	$ 15.59 **	0.00
IRONWORKER, STRUCTURAL	$ 21.55	1.39
LABORER: Common or General	$ 12.79 **	1.30
LABORER: Mason Tender - Brick	$ 12.37 **	0.00
LABORER: Mason Tender - Cement/Concrete	$ 12.37 **	0.00
LABORER: Pipelayer	$ 14.88 **	1.51
OPERATOR: Backhoe/Excavator/Trackhoe	$ 17.36 **	2.25
OPERATOR: Bobcat/Skid Steer/Skid Loader	$ 15.26 **	0.80
OPERATOR: Bulldozer	$ 15.29 **	2.27
OPERATOR: Loader	$ 17.93	2.70
PAINTER (Brush and Roller)	$ 15.41 **	0.00
PLUMBER	$ 16.14 **	1.50
ROOFER	$ 15.33 **	1.95
SHEET METAL WORKER, Includes HVAC Duct Installation	$ 15.54 **	0.00

TRUCK DRIVER: Dump Truck.....$ 16.30 ** 0.00

WELDERS - Receive rate prescribed for craft performing operation to which welding is incidental.

==========

** Workers in this classification may be entitled to a higher minimum wage under Executive Order 14026 ($17.75) or 13658 ($13.30). Please see the Note at the top of the wage determination for more information. Please also note that the minimum wage requirements of Executive Order 14026 are not currently being enforced as to any contract or subcontract to which the states of Texas, Louisiana, or Mississippi, including their agencies, are a party.

Note: Executive Order (EO) 13706, Establishing Paid Sick Leave for Federal Contractors applies to all contracts subject to the Davis-Bacon Act for which the contract is awarded (and any solicitation was issued) on or after January 1, 2017. If this contract is covered by the EO, the contractor must provide employees with 1 hour of paid sick leave for every 30 hours they work, up to 56 hours of paid sick leave each year. Employees must be permitted to use paid sick leave for their own illness, injury or other health-related needs, including preventive care; to assist a family member (or person who is like family to the employee) who is ill, injured, or has other health-related needs, including preventive care; or for reasons resulting from, or to assist a family member (or person who is like family to the employee) who is a victim of, domestic violence, sexual assault, or stalking. Additional information on contractor requirements and worker protections under the EO is available at https://www.dol.gov/agencies/whd/government-contracts.

Unlisted classifications needed for work not included within the scope of the classifications listed may be added after award only as provided in the labor standards contract clauses (29CFR 5.5 (a) (1) (iii)).

The body of each wage determination lists the classifications and wage rates that have been found to be prevailing for the type(s) of construction and geographic area covered by the wage determination. The classifications are listed in alphabetical order under rate identifiers indicating whether the particular rate is a union rate (current union negotiated rate), a survey rate, a weighted union average rate, a state adopted rate, or a supplemental classification rate.

Union Rate Identifiers

A four-letter identifier beginning with characters other than ""SU"", ""UAVG"", ?SA?, or ?SC? denotes that a union rate was prevailing for that classification in the survey. Example: PLUM0198-005 07/01/2024. PLUM is an identifier of the union whose collectively bargained rate prevailed in the survey for this classification, which in this example would be Plumbers.

0198 indicates the local union number or district council number where applicable, i.e., Plumbers Local 0198. The next number, 005 in the example, is an internal number used in processing the wage determination. The date, 07/01/2024 in the example, is the effective date of the most current negotiated rate.

Union prevailing wage rates are updated to reflect all changes over time that are reported to WHD in the rates in the collective bargaining agreement (CBA) governing the classification.

Union Average Rate Identifiers

The UAVG identifier indicates that no single rate prevailed for those classifications, but that 100% of the data reported for the classifications reflected union rates. EXAMPLE: UAVG-OH-0010 01/01/2024. UAVG indicates that the rate is a weighted union average rate. OH indicates the State of Ohio. The next number, 0010 in the example, is an internal number used in producing the wage determination. The date, 01/01/2024 in the example, indicates the date the wage determination was updated to reflect the most current union average rate.

A UAVG rate will be updated once a year, usually in January, to reflect a weighted average of the current rates in the collective bargaining agreements on which the rate is based.

Survey Rate Identifiers

The ""SU"" identifier indicates that either a single non-union rate prevailed (as defined in 29 CFR 1.2) for this classification in the survey or that the rate was derived by computing a weighted average rate based on all the rates reported in the survey for that classification. As a weighted average rate includes all rates reported in the survey, it may include both union and non-union rates. Example: SUFL2022-007 6/27/2024. SU indicates the rate is a single non-union prevailing rate or a weighted average of survey data for that classification. FL indicates the State of Florida. 2022 is the year of the survey on which these classifications and rates are based. The next number, 007 in the example, is an internal number used in producing the wage determination. The date, 6/27/2024 in the example, indicates the survey completion date for the classifications and rates under that identifier.

?SU? wage rates typically remain in effect until a new survey is conducted. However, the Wage and Hour Division (WHD) has the discretion to update such rates under 29 CFR 1.6(c)(1).

State Adopted Rate Identifiers

The ""SA"" identifier indicates that the classifications and prevailing wage rates set by a state (or local) government were adopted under 29 C.F.R 1.3(g)-(h). Example: SAME2023-007 01/03/2024. SA reflects that the rates are state adopted. ME refers to the State of Maine. 2023 is the year during which the state completed the survey on which the listed classifications and rates are based. The next number, 007 in the example, is an internal number used in producing the wage determination. The date, 01/03/2024 in the example, reflects the date on which the classifications and rates under the ?SA? identifier took

effect under state law in the state from which the rates were adopted.

WAGE DETERMINATION APPEALS PROCESS

1) Has there been an initial decision in the matter? This can be:

a) a survey underlying a wage determination
b) an existing published wage determination
c) an initial WHD letter setting forth a position on a wage determination matter
d) an initial conformance (additional classification and rate) determination

On survey related matters, initial contact, including requests for summaries of surveys, should be directed to the WHD Branch of Wage Surveys. Requests can be submitted via email to davisbaconinfo@dol.gov or by mail to:

Branch of Wage Surveys
Wage and Hour Division
U.S. Department of Labor
200 Constitution Avenue, N.W.
Washington, DC 20210

Regarding any other wage determination matter such as conformance decisions, requests for initial decisions should be directed to the WHD Branch of Construction Wage Determinations. Requests can be submitted via email to BCWD-Office@dol.gov or by mail to:

Branch of Construction Wage Determinations
Wage and Hour Division
U.S. Department of Labor
200 Constitution Avenue, N.W.
Washington, DC 20210

2) If an initial decision has been issued, then any interested party (those affected by the action) that disagrees with the decision can request review and reconsideration from the Wage and Hour Administrator (See 29 CFR Part 1.8 and 29 CFR Part 7). Requests for review and reconsideration can be submitted via email to dba.reconsideration@dol.gov or by mail to:

Wage and Hour Administrator
U.S. Department of Labor
200 Constitution Avenue, N.W.
Washington, DC 20210

The request should be accompanied by a full statement of the interested party's position and any information (wage payment data, project description, area practice material, etc.) that the requestor considers relevant to the issue.

3) If the decision of the Administrator is not favorable, an interested party may appeal directly to the Administrative Review Board (formerly the Wage Appeals Board). Write to:

Administrative Review Board

U.S. Department of Labor
200 Constitution Avenue, N.W.
Washington, DC 20210.

==========

END OF GENERAL DECISION"

DOCUMENT 00 1116 - INVITATION TO BID

1.1 PROJECT INFORMATION

A. Notice to Bidders: Qualified bidders are invited to submit bids for Project as described in this Document according to the Instructions to Bidders.

B. Project Identification: 25015

1. Project Location: Daleville, VA

C. Owner: Daleville Town Center Apartments III, LLC

D. Owner's Representative: Dylan Fox

E. Architect: Poole and Poole Architecture .

F. Project Description: Project consists of 2 three story wood framed building with 60 apartments

G. Construction Contract: Bids will be received for the following Work:

1. General Contract (all trades).

1.2 BID SUBMITTAL AND OPENING

A. Owner will receive sealed bids until the bid time and date at the location indicated below. Owner will consider bids prepared in compliance with the Instructions to Bidders issued by Owner, and delivered as follows:

1. Bid Date: **TBD**
2. Bid Time: **TBD**

1.3 BID SECURITY

A. Failure to provide security deposit, bonding or insurance requirements may, at the discretion of Owner, be waived

1.4 DOCUMENTS

A. Printed Procurement and Contracting Documents: Obtain after <DATE> by contacting owner. Documents will be provided to prime bidders only; only complete sets of documents will be issued.

1.5 BIDDER'S QUALIFICATIONS

A. To demonstrate qualification for performing the Work of this Contract, bidders may be requested to submit written evidence of financial position, license to perform work in the Chester, VA.

B. Include the cost of performance assurance bond in the Bid Amount and identify the cost on the Bid Form.

END OF DOCUMENT 00 1116

DOCUMENT 00 4133 - BID FORM - COST-PLUS-FEE (SINGLE-PRIME CONTRACT)

1.1 BID INFORMATION

A. Bidder: _____.

B. Project Name: Daleville Town Center Apartments III

C. Project Location: Daleville, VA.

D. Owner: Daleville Town Center Apartments III, LLC

E. Architect: Poole and Poole Architecture.

F. Architect Project Number: 25015

1.2 CERTIFICATIONS AND CONTRACTOR'S FEE

A. Base Bid, Single-Prime (All Trades) Cost-Plus-Fee Contract: The undersigned Bidder, having carefully examined the Procurement and Contracting Requirements, Conditions of the Contract, Drawings, Specifications, and all subsequent Addenda, as prepared by Poole & Poole Architecture and Architect's consultants, having visited the site, and being familiar with all conditions and requirements of the Work, hereby agrees to furnish all material, labor, equipment, and services necessary to complete the construction of the above-named project, according to the requirements of the Procurement and Contracting Documents, for the Cost of the Work as defined in the Contract Documents, plus the following Contractor's Fee of:

1. _____ Dollars ($_____).
2. _____ percent (___%) of the Cost of the Work.

1.3 BID GUARANTEE

A. The undersigned Bidder agrees to execute a contract for this Work in the above amount and to furnish surety as specified within 7 days after a written Notice of Award, if offered within 90 days after receipt of bids, and on failure to do so agrees to forfeit to Owner the attached cash, cashier's check, certified check, U.S. money order, or bid bond, as liquidated damages for such failure, in the following amount constituting five percent (5%) of the Base Bid amount above:

1. _____ Dollars ($_____).

B. In the event Owner does not offer a Notice of Award within the time limits stated above, Owner will return to the undersigned the cash, cashier's check, certified check, U.S. money order, or bid bond.

1.4 SUBCONTRACTORS AND SUPPLIERS

A. The following companies shall execute subcontracts for the portions of the Work indicated:

1. Concrete Work: _____.
2. Masonry Work:_____.
3. Roofing Work: _____.
4. Plumbing Work: _____.
5. HVAC Work: _____.
6. Electrical Work: _____.

1.5 TIME OF COMPLETION

A. The undersigned Bidder proposes and agrees hereby to commence the Work of the Contract Documents on a date specified in a written Notice to Proceed to be issued by Architect and shall fully complete the Work within _____ calendar days.

1.6 ACKNOWLEDGEMENT OF ADDENDA

A. The undersigned Bidder acknowledges receipt of and use of the following Addenda in the preparation of this Bid:

1. Addendum No. 1, dated _____.
2. Addendum No. 2, dated _____.
3. Addendum No. 3, dated _____.
4. Addendum No. 4, dated _____.

1.7 BID SUPPLEMENTS

1.8 CONTRACTOR'S LICENSE

A. The undersigned further states that it is a duly licensed contractor, for the type of work proposed, in <**Insert Project jurisdiction**>, and that all fees, permits, etc., pursuant to submitting this proposal have been paid in full.

1.9 SUBMISSION OF BID

A. Submitted By:_____(Name of bidding firm or corporation).

B. Authorized Signature:_____(Handwritten signature).

C. Signed By:_____(Type or print name).

D. Title:_____(Owner/Partner/President/Vice President).

E. Witness By:_____(Handwritten signature).

F. Attest:_____(Handwritten signature).

G. By:_____(Type or print name).

H. Title:_____(Corporate Secretary or Assistant Secretary).

I. Street Address:_____.

J. City, State, Zip_____.

K. Phone:_____.

L. License No.:_____

M. Federal ID No.:_____(Affix Corporate Seal Here).

END OF DOCUMENT 00 4133

AIA® Document A201™ – 2017

General Conditions of the Contract for Construction

for the following PROJECT:
(Name and location or address)

Daleville Towncenter Apartments - Phase III
Daleville, VA 24083

THE OWNER:
(Name, legal status and address)

Daleville Towncenter Apartments III, LLC
2903-A Boulevard
Colonial Heights, VA 23834

THE ARCHITECT:
(Name, legal status and address)

Poole & Poole Architecture
4240 Park Place Court
Glen Allen, VA 23060

This document has important legal consequences. Consultation with an attorney is encouraged with respect to its completion or modification.

For guidance in modifying this document to include supplementary conditions, see AIA Document A503™, Guide for Supplementary Conditions.

TABLE OF ARTICLES

1 GENERAL PROVISIONS

2 OWNER

3 CONTRACTOR

4 ARCHITECT

5 SUBCONTRACTORS

6 CONSTRUCTION BY OWNER OR BY SEPARATE CONTRACTORS

7 CHANGES IN THE WORK

8 TIME

9 PAYMENTS AND COMPLETION

10 PROTECTION OF PERSONS AND PROPERTY

11 INSURANCE AND BONDS

12 UNCOVERING AND CORRECTION OF WORK

13 MISCELLANEOUS PROVISIONS

14 TERMINATION OR SUSPENSION OF THE CONTRACT

15 CLAIMS AND DISPUTES

Sample

Init.

AIA Document A201™ – 2017. Copyright © 1911, 1915, 1918, 1925, 1937, 1951, 1958, 1961, 1963, 1966, 1970, 1976, 1987, 1997, 2007 and 2017 by The American Institute of Architects. All rights reserved. WARNING: This AIA® Document is protected by U.S. Copyright Law and International Treaties. Unauthorized reproduction or distribution of this AIA® Document, or any portion of it, may result in severe civil and criminal penalties, and will be prosecuted to the maximum extent possible under the law. To report copyright violations of AIA Contract Documents, e-mail The American Institute of Architects' legal counsel, copyright@aia.org.

INDEX
(Topics and numbers in bold are Section headings.)

Acceptance of Nonconforming Work
9.6.6, 9.9.3, **12.3**
Acceptance of Work
9.6.6, 9.8.2, 9.9.3, 9.10.1, 9.10.3, 12.3
Access to Work
3.16, 6.2.1, 12.1
Accident Prevention
10
Acts and Omissions
3.2, 3.3.2, 3.12.8, 3.18, 4.2.3, 8.3.1, 9.5.1, 10.2.5, 10.2.8, 13.3.2, 14.1, 15.1.2, 15.2
Addenda
1.1.1
Additional Costs, Claims for
3.7.4, 3.7.5, 10.3.2, 15.1.5
Additional Inspections and Testing
9.4.2, 9.8.3, 12.2.1, **13.4**
Additional Time, Claims for
3.2.4, 3.7.4, 3.7.5, 3.10.2, 8.3.2, **15.1.6**
Administration of the Contract
3.1.3, **4.2**, 9.4, 9.5
Advertisement or Invitation to Bid
1.1.1
Aesthetic Effect
4.2.13
Allowances
3.8
Applications for Payment
4.2.5, 7.3.9, 9.2, **9.3**, 9.4, 9.5.1, 9.5.4, 9.6.3, 9.7, 9.10
Approvals
2.1.1, 2.3.1, 2.5, 3.1.3, 3.10.2, 3.12.8, 3.12.9, 3.12.10.1, 4.2.7, 9.3.2, 13.4.1
Arbitration
8.3.1, 15.3.2, **15.4**
ARCHITECT
4
Architect, Definition of
4.1.1
Architect, Extent of Authority
2.5, 3.12.7, 4.1.2, 4.2, 5.2, 6.3, 7.1.2, 7.3.4, 7.4, 9.2, 9.3.1, 9.4, 9.5, 9.6.3, 9.8, 9.10.1, 9.10.3, 12.1, 12.2.1, 13.4.1, 13.4.2, 14.2.2, 14.2.4, 15.1.4, 15.2.1
Architect, Limitations of Authority and Responsibility
2.1.1, 3.12.4, 3.12.8, 3.12.10, 4.1.2, 4.2.1, 4.2.2, 4.2.3, 4.2.6, 4.2.7, 4.2.10, 4.2.12, 4.2.13, 5.2.1, 7.4, 9.4.2, 9.5.4, 9.6.4, 15.1.4, 15.2
Architect's Additional Services and Expenses
2.5, 12.2.1, 13.4.2, 13.4.3, 14.2.4
Architect's Administration of the Contract
3.1.3, 3.7.4, 15.2, 9.4.1, 9.5
Architect's Approvals
2.5, 3.1.3, 3.5, 3.10.2, 4.2.7
Architect's Authority to Reject Work
3.5, 4.2.6, 12.1.2, 12.2.1
Architect's Copyright
1.1.7, 1.5
Architect's Decisions
3.7.4, 4.2.6, 4.2.7, 4.2.11, 4.2.12, 4.2.13, 4.2.14, 6.3, 7.3.4, 7.3.9, 8.1.3, 8.3.1, 9.2, 9.4.1, 9.5, 9.8.4, 9.9.1, 13.4.2, 15.2
Architect's Inspections
3.7.4, 4.2.2, 4.2.9, 9.4.2, 9.8.3, 9.9.2, 9.10.1, 13.4
Architect's Instructions
3.2.4, 3.3.1, 4.2.6, 4.2.7, 13.4.2
Architect's Interpretations
4.2.11, 4.2.12
Architect's Project Representative
4.2.10
Architect's Relationship with Contractor
1.1.2, 1.5, 2.3.3, 3.1.3, 3.2.2, 3.2.3, 3.2.4, 3.3.1, 3.4.2, 3.5, 3.7.4, 3.7.5, 3.9.2, 3.9.3, 3.10, 3.11, 3.12, 3.16, 3.18, 4.1.2, 4.2, 5.2, 6.2.2, 7, 8.3.1, 9.2, 9.3, 9.4, 9.5, 9.7, 9.8, 9.9, 10.2.6, 10.3, 11.3, 12, 13.3.2, 13.4, 15.2
Architect's Relationship with Subcontractors
1.1.2, 4.2.3, 4.2.4, 4.2.6, 9.6.3, 9.6.4, 11.3
Architect's Representations
9.4.2, 9.5.1, 9.10.1
Architect's Site Visits
3.7.4, 4.2.2, 4.2.9, 9.4.2, 9.5.1, 9.9.2, 9.10.1, 13.4
Asbestos
10.3.1
Attorneys' Fees
3.18.1, 9.6.8, 9.10.2, 10.3.3
Award of Separate Contracts
6.1.1, 6.1.2
Award of Subcontracts and Other Contracts for Portions of the Work
5.2
Basic Definitions
1.1
Bidding Requirements
1.1.1
Binding Dispute Resolution
8.3.1, 9.7, 11.5, 13.1, 15.1.2, 15.1.3, 15.2.1, 15.2.5, 15.2.6.1, 15.3.1, 15.3.2, 15.3.3, 15.4.1
Bonds, Lien
7.3.4.4, 9.6.8, 9.10.2, 9.10.3
Bonds, Performance, and Payment
7.3.4.4, 9.6.7, 9.10.3, **11.1.2**, 11.1.3, **11.5**
Building Information Models Use and Reliance
1.8
Building Permit
3.7.1
Capitalization
1.3
Certificate of Substantial Completion
9.8.3, 9.8.4, 9.8.5
Certificates for Payment
4.2.1, 4.2.5, 4.2.9, 9.3.3, **9.4**, 9.5, 9.6.1, 9.6.6, 9.7, 9.10.1, 9.10.3, 14.1.1.3, 14.2.4, 15.1.4
Certificates of Inspection, Testing or Approval
13.4.4

Init.
/
AIA Document A201™ – 2017. Copyright © 1911, 1915, 1918, 1925, 1937, 1951, 1958, 1961, 1963, 1966, 1970, 1976, 1987, 1997, 2007 and 2017 by The American Institute of Architects. All rights reserved. WARNING: This AIA® Document is protected by U.S. Copyright Law and International Treaties. Unauthorized reproduction or distribution of this AIA® Document, or any portion of it, may result in severe civil and criminal penalties, and will be prosecuted to the maximum extent possible under the law. To report copyright violations of AIA Contract Documents, e-mail The American Institute of Architects' legal counsel, copyright@aia.org.

Certificates of Insurance
9.10.2
Change Orders
1.1.1, 3.4.2, 3.7.4, 3.8.2.3, 3.11, 3.12.8, 4.2.8, 5.2.3, 7.1.2, 7.1.3, **7.2**, 7.3.2, 7.3.7, 7.3.9, 7.3.10, 8.3.1, 9.3.1.1, 9.10.3, 10.3.2, 11.2, 11.5, 12.1.2
Change Orders, Definition of
7.2.1
CHANGES IN THE WORK
2.2.2, 3.11, 4.2.8, **7**, 7.2.1, 7.3.1, 7.4, 8.3.1, 9.3.1.1, 11.5
Claims, Definition of
15.1.1
Claims, Notice of
1.6.2, 15.1.3
CLAIMS AND DISPUTES
3.2.4, 6.1.1, 6.3, 7.3.9, 9.3.3, 9.10.4, 10.3.3, **15**, 15.4
Claims and Timely Assertion of Claims
15.4.1
Claims for Additional Cost
3.2.4, 3.3.1, 3.7.4, 7.3.9, 9.5.2, 10.2.5, 10.3.2, **15.1.5**
Claims for Additional Time
3.2.4, 3.3.1, 3.7.4, 6.1.1, 8.3.2, 9.5.2, 10.3.2, **15.1.6**
Concealed or Unknown Conditions, Claims for
3.7.4
Claims for Damages
3.2.4, 3.18, 8.3.3, 9.5.1, 9.6.7, 10.2.5, 10.3.3, 11.3, 11.3.2, 14.2.4, 15.1.7
Claims Subject to Arbitration
15.4.1
Cleaning Up
3.15, 6.3
Commencement of the Work, Conditions Relating to
2.2.1, 3.2.2, 3.4.1, 3.7.1, 3.10.1, 3.12.6, 5.2.1, 5.2.3, 6.2.2, 8.1.2, 8.2.2, 8.3.1, 11.1, 11.2, **15.1.5**
Commencement of the Work, Definition of
8.1.2
Communications
3.9.1, **4.2.4**
Completion, Conditions Relating to
3.4.1, 3.11, 3.15, 4.2.2, 4.2.9, 8.2, 9.4.2, 9.8, 9.9.1, 9.10, 12.2, 14.1.2, 15.1.2
COMPLETION, PAYMENTS AND
9
Completion, Substantial
3.10.1, 4.2.9, 8.1.1, 8.1.3, 8.2.3, 9.4.2, 9.8, 9.9.1, 9.10.3, 12.2, 15.1.2
Compliance with Laws
2.3.2, 3.2.3, 3.6, 3.7, 3.12.10, 3.13, 9.6.4, 10.2.2, 13.1, 13.3, 13.4.1, 13.4.2, 13.5, 14.1.1, 14.2.1.3, 15.2.8, 15.4.2, 15.4.3
Concealed or Unknown Conditions
3.7.4, 4.2.8, 8.3.1, 10.3
Conditions of the Contract
1.1.1, 6.1.1, 6.1.4
Consent, Written
3.4.2, 3.14.2, 4.1.2, 9.8.5, 9.9.1, 9.10.2, 9.10.3, 13.2, 15.4.4.2
Consolidation or Joinder
15.4.4
CONSTRUCTION BY OWNER OR BY SEPARATE CONTRACTORS
1.1.4, **6**
Construction Change Directive, Definition of
7.3.1
Construction Change Directives
1.1.1, 3.4.2, 3.11, 3.12.8, 4.2.8, 7.1.1, 7.1.2, 7.1.3, **7.3**, 9.3.1.1
Construction Schedules, Contractor's
3.10, 3.11, 3.12.1, 3.12.2, 6.1.3, 15.1.6.2
Contingent Assignment of Subcontracts
5.4, 14.2.2.2
Continuing Contract Performance
15.1.4
Contract, Definition of
1.1.2
CONTRACT, TERMINATION OR SUSPENSION OF THE
5.4.1.1, 5.4.2, 11.5, **14**
Contract Administration
3.1.3, **4**, 9.4, 9.5
Contract Award and Execution, Conditions Relating to
3.7.1, 3.10, 5.2, 6.1
Contract Documents, Copies Furnished and Use of
1.5.2, 2.3.6, 5.3
Contract Documents, Definition of
1.1.1
Contract Sum
2.2.2, 2.2.4, 3.7.4, 3.7.5, 3.8, 3.10.2, 5.2.3, 7.3, 7.4, **9.1**, 9.2, 9.4.2, 9.5.1.4, 9.6.7, 9.7, 10.3.2, 11.5, 12.1.2, 12.3, 14.2.4, 14.3.2, 15.1.4.2, **15.1.5, 15.2.5**
Contract Sum, Definition of
9.1
Contract Time
1.1.4, 2.2.1, 2.2.2, 3.7.4, 3.7.5, 3.10.2, 5.2.3, 6.1.5, 7.2.1.3, 7.3.1, 7.3.5, 7.3.6, 7, 7, 7.3.10, 7.4, 8.1.1, 8.2.1, 8.2.3, 8.3.1, 9.5.1, 9.7, 10.3.2, 12.1.1, 12.1.2, 14.3.2, 15.1.4.2, 15.1.6.1, 15.2.5
Contract Time, Definition of
8.1.1
CONTRACTOR
3
Contractor, Definition of
3.1, 6.1.2
Contractor's Construction and Submittal Schedules
3.10, 3.12.1, 3.12.2, 4.2.3, 6.1.3, 15.1.6.2
Contractor's Employees
2.2.4, 3.3.2, 3.4.3, 3.8.1, 3.9, 3.18.2, 4.2.3, 4.2.6, 10.2, 10.3, 11.3, 14.1, 14.2.1.1
Contractor's Liability Insurance
11.1
Contractor's Relationship with Separate Contractors and Owner's Forces
3.12.5, 3.14.2, 4.2.4, 6, 11.3, 12.2.4

AIA Document A201™ – 2017. Copyright © 1911, 1915, 1918, 1925, 1937, 1951, 1958, 1961, 1963, 1966, 1970, 1976, 1987, 1997, 2007 and 2017 by The American Institute of Architects. **All rights reserved. WARNING: This AIA® Document is protected by U.S. Copyright Law and International Treaties. Unauthorized reproduction or distribution of this AIA® Document, or any portion of it, may result in severe civil and criminal penalties, and will be prosecuted to the maximum extent possible under the law.** To report copyright violations of AIA Contract Documents, e-mail The American Institute of Architects' legal counsel, copyright@aia.org.

Contractor's Relationship with Subcontractors
1.2.2, 2.2.4, 3.3.2, 3.18.1, 3.18.2, 4.2.4, 5, 9.6.2, 9.6.7, 9.10.2, 11.2, 11.3, 11.4
Contractor's Relationship with the Architect
1.1.2, 1.5, 2.3.3, 3.1.3, 3.2.2, 3.2.3, 3.2.4, 3.3.1, 3.4.2, 3.5.1, 3.7.4, 3.10, 3.11, 3.12, 3.16, 3.18, 4.2, 5.2, 6.2.2, 7, 8.3.1, 9.2, 9.3, 9.4, 9.5, 9.7, 9.8, 9.9, 10.2.6, 10.3, 11.3, 12, 13.4, 15.1.3, 15.2.1
Contractor's Representations
3.2.1, 3.2.2, 3.5, 3.12.6, 6.2.2, 8.2.1, 9.3.3, 9.8.2
Contractor's Responsibility for Those Performing the Work
3.3.2, 3.18, 5.3, 6.1.3, 6.2, 9.5.1, 10.2.8
Contractor's Review of Contract Documents
3.2
Contractor's Right to Stop the Work
2.2.2, 9.7
Contractor's Right to Terminate the Contract
14.1
Contractor's Submittals
3.10, 3.11, 3.12, 4.2.7, 5.2.1, 5.2.3, 9.2, 9.3, 9.8.2, 9.8.3, 9.9.1, 9.10.2, 9.10.3
Contractor's Superintendent
3.9, 10.2.6
Contractor's Supervision and Construction Procedures
1.2.2, 3.3, 3.4, 3.12.10, 4.2.2, 4.2.7, 6.1.3, 6.2.4, 7.1.3, 7.3.4, 7.3.6, 8.2, 10, 12, 14, 15.1.4
Coordination and Correlation
1.2, 3.2.1, 3.3.1, 3.10, 3.12.6, 6.1.3, 6.2.1
Copies Furnished of Drawings and Specifications
1.5, 2.3.6, 3.11
Copyrights
1.5, **3.17**
Correction of Work
2.5, 3.7.3, 9.4.2, 9.8.2, 9.8.3, 9.9.1, 12.1.2, **12.2**, 12.3, 15.1.3.1, 15.1.3.2, 15.2.1
Correlation and Intent of the Contract Documents
1.2
Cost, Definition of
7.3.4
Costs
2.5, 3.2.4, 3.7.3, 3.8.2, 3.15.2, 5.4.2, 6.1.1, 6.2.3, 7.3.3.3, 7.3.4, 7.3.8, 7.3.9, 9.10.2, 10.3.2, 10.3.6, 11.2, 12.1.2, 12.2.1, 12.2.4, 13.4, 14
Cutting and Patching
3.14, 6.2.5
Damage to Construction of Owner or Separate Contractors
3.14.2, 6.2.4, 10.2.1.2, 10.2.5, 10.4, 12.2.4
Damage to the Work
3.14.2, 9.9.1, 10.2.1.2, 10.2.5, 10.4, 12.2.4
Damages, Claims for
3.2.4, 3.18, 6.1.1, 8.3.3, 9.5.1, 9.6.7, 10.3.3, 11.3.2, 11.3, 14.2.4, 15.1.7
Damages for Delay
6.2.3, 8.3.3, 9.5.1.6, 9.7, 10.3.2, 14.3.2
Date of Commencement of the Work, Definition of
8.1.2
Date of Substantial Completion, Definition of
8.1.3
Day, Definition of
8.1.4
Decisions of the Architect
3.7.4, 4.2.6, 4.2.7, 4.2.11, 4.2.12, 4.2.13, 6.3, 7.3.4, 7.3.9, 8.1.3, 8.3.1, 9.2, 9.4, 9.5.1, 9.8.4, 9.9.1, 13.4.2, 14.2.2, 14.2.4, 15.1, 15.2
Decisions to Withhold Certification
9.4.1, **9.5**, 9.7, 14.1.1.3
Defective or Nonconforming Work, Acceptance, Rejection and Correction of
2.5, 3.5, 4.2.6, 6.2.3, 9.5.1, 9.5.3, 9.6.6, 9.8.2, 9.9.3, 9.10.4, 12.2.1
Definitions
1.1, 2.1.1, 3.1.1, 3.5, 3.12.1, 3.12.2, 3.12.3, 4.1.1, 5.1, 6.1.2, 7.2.1, 7.3.1, 8.1, 9.1, 9.8.1, 15.1.1
Delays and Extensions of Time
3.2, **3.7.4**, 5.2.3, 7.2.1, 7.3.1, **7.4**, **8.3**, 9.5.1, **9.7**, 10.3.2, **10.4**, 14.3.2, **15.1.6**, 15.2.5
Digital Data Use and Transmission
1.7
Disputes
6.3, 7.3.9, 15.1, 15.2
Documents and Samples at the Site
3.11
Drawings, Definition of
1.1.5
Drawings and Specifications, Use and Ownership of
3.11
Effective Date of Insurance
8.2.2
Emergencies
10.4, 14.1.1.2, **15.1.5**
Employees, Contractor's
3.3.2, 3.4.3, 3.8.1, 3.9, 3.18.2, 4.2.3, 4.2.6, 10.2, 10.3.3, 11.3, 14.1, 14.2.1.1
Equipment, Labor, or Materials
1.1.3, 1.1.6, 3.4, 3.5, 3.8.2, 3.8.3, 3.12, 3.13, 3.15.1, 4.2.6, 4.2.7, 5.2.1, 6.2.1, 7.3.4, 9.3.2, 9.3.3, 9.5.1.3, 9.10.2, 10.2.1, 10.2.4, 14.2.1.1, 14.2.1.2
Execution and Progress of the Work
1.1.3, 1.2.1, 1.2.2, 2.3.4, 2.3.6, 3.1, 3.3.1, 3.4.1, 3.7.1, 3.10.1, 3.12, 3.14, 4.2, 6.2.2, 7.1.3, 7.3.6, 8.2, 9.5.1, 9.9.1, 10.2, 10.3, 12.1, 12.2, 14.2, 14.3.1, 15.1.4
Extensions of Time
3.2.4, 3.7.4, 5.2.3, 7.2.1, 7.3, 7.4, 9.5.1, 9.7, 10.3.2, 10.4, 14.3, 15.1.6, **15.2.5**
Failure of Payment
9.5.1.3, **9.7**, 9.10.2, 13.5, 14.1.1.3, 14.2.1.2
Faulty Work
(See Defective or Nonconforming Work)
Final Completion and Final Payment
4.2.1, 4.2.9, 9.8.2, **9.10**, 12.3, 14.2.4, 14.4.3
Financial Arrangements, Owner's
2.2.1, 13.2.2, 14.1.1.4
GENERAL PROVISIONS
1

Init.
/
AIA Document A201™ – 2017. Copyright © 1911, 1915, 1918, 1925, 1937, 1951, 1958, 1961, 1963, 1966, 1970, 1976, 1987, 1997, 2007 and 2017 by The American Institute of Architects. All rights reserved. WARNING: This AIA® Document is protected by U.S. Copyright Law and International Treaties. Unauthorized reproduction or distribution of this AIA® Document, or any portion of it, may result in severe civil and criminal penalties, and will be prosecuted to the maximum extent possible under the law. To report copyright violations of AIA Contract Documents, e-mail The American Institute of Architects' legal counsel, copyright@aia.org.

Governing Law
13.1
Guarantees (See Warranty)
Hazardous Materials and Substances
10.2.4, **10.3**
Identification of Subcontractors and Suppliers
5.2.1
Indemnification
3.17, **3.18**, 9.6.8, 9.10.2, 10.3.3, 11.3
Information and Services Required of the Owner
2.1.2, **2.2**, 2.3, 3.2.2, 3.12.10.1, 6.1.3, 6.1.4, 6.2.5, 9.6.1, 9.9.2, 9.10.3, 10.3.3, 11.2, 13.4.1, 13.4.2, 14.1.1.4, 14.1.4, 15.1.4
Initial Decision
15.2
Initial Decision Maker, Definition of
1.1.8
Initial Decision Maker, Decisions
14.2.4, 15.1.4.2, 15.2.1, 15.2.2, 15.2.3, 15.2.4, 15.2.5
Initial Decision Maker, Extent of Authority
14.2.4, 15.1.4.2, 15.2.1, 15.2.2, 15.2.3, 15.2.4, 15.2.5
Injury or Damage to Person or Property
10.2.8, 10.4
Inspections
3.1.3, 3.3.3, 3.7.1, 4.2.2, 4.2.6, 4.2.9, 9.4.2, 9.8.3, 9.9.2, 9.10.1, 12.2.1, 13.4
Instructions to Bidders
1.1.1
Instructions to the Contractor
3.2.4, 3.3.1, 3.8.1, 5.2.1, 7, 8.2.2, 12, 13.4.2
Instruments of Service, Definition of
1.1.7
Insurance
6.1.1, 7.3.4, 8.2.2, 9.3.2, 9.8.4, 9.9.1, 9.10.2, 10.2.5, **11**
Insurance, Notice of Cancellation or Expiration
11.1.4, 11.2.3
Insurance, Contractor's Liability
11.1
Insurance, Effective Date of
8.2.2, 14.4.2
Insurance, Owner's Liability
11.2
Insurance, Property
10.2.5, 11.2, 11.4, 11.5
Insurance, Stored Materials
9.3.2
INSURANCE AND BONDS
11
Insurance Companies, Consent to Partial Occupancy
9.9.1
Insured loss, Adjustment and Settlement of
11.5
Intent of the Contract Documents
1.2.1, 4.2.7, 4.2.12, 4.2.13
Interest
13.5
Interpretation
1.1.8, 1.2.3, **1.4**, 4.1.1, 5.1, 6.1.2, 15.1.1
Interpretations, Written
4.2.11, 4.2.12
Judgment on Final Award
15.4.2
Labor and Materials, Equipment
1.1.3, 1.1.6, **3.4**, 3.5, 3.8.2, 3.8.3, 3.12, 3.13, 3.15.1, 5.2.1, 6.2.1, 7.3.4, 9.3.2, 9.3.3, 9.5.1.3, 9.10.2, 10.2.1, 10.2.4, 14.2.1.1, 14.2.1.2
Labor Disputes
8.3.1
Laws and Regulations
1.5, 2.3.2, 3.2.3, 3.2.4, 3.6, 3.7, 3.12.10, 3.13, 9.6.4, 9.9.1, 10.2.2, 13.1, 13.3.1, 13.4.2, 13.5, 14, 15.2.8, 15.4
Liens
2.1.2, 9.3.1, 9.3.3, 9.6.8, 9.10.2, 9.10.4, 15.2.8
Limitations, Statutes of
12.2.5, 15.1.2, 15.4.1.1
Limitations of Liability
3.2.2, 3.5, 3.12.10, 3.12.10.1, 3.17, 3.18.1, 4.2.6, 4.2.7, 6.2.2, 9.4.2, 9.6.4, 9.6.7, 9.6.8, 10.2.5, 10.3.3, 11.3, 12.2.5, 13.3.1
Limitations of Time
2.1.2, 2.2, 2.5, 3.2.2, 3.10, 3.11, 3.12.5, 3.15.1, 4.2.7, 5.2, 5.3, 5.4.1, 6.2.4, 7.3, 7.4, 8.2, 9.2, 9.3.1, 9.3.3, 9.4.1, 9.5, 9.6, 9.7, 9.8, 9.9, 9.10, 12.2, 13.4, 14, 15, 15.1.2, 15.1.3, 15.1.5
Materials, Hazardous
10.2.4, **10.3**
Materials, Labor, Equipment and
1.1.3, 1.1.6, 3.4.1, 3.5, 3.8.2, 3.8.3, 3.12, 3.13, 3.15.1, 5.2.1, 6.2.1, 7.3.4, 9.3.2, 9.3.3, 9.5.1.3, 9.10.2, 10.2.1.2, 10.2.4, 14.2.1.1, 14.2.1.2
Means, Methods, Techniques, Sequences and Procedures of Construction
3.3.1, 3.12.10, 4.2.2, 4.2.7, 9.4.2
Mechanic's Lien
2.1.2, 9.3.1, 9.3.3, 9.6.8, 9.10.2, 9.10.4, 15.2.8
Mediation
8.3.1, 15.1.3.2, 15.2.1, 15.2.5, 15.2.6, **15.3**, 15.4.1, 15.4.1.1
Minor Changes in the Work
1.1.1, 3.4.2, 3.12.8, 4.2.8, 7.1, **7.4**
MISCELLANEOUS PROVISIONS
13
Modifications, Definition of
1.1.1
Modifications to the Contract
1.1.1, 1.1.2, 2.5, 3.11, 4.1.2, 4.2.1, 5.2.3, 7, 8.3.1, 9.7, 10.3.2
Mutual Responsibility
6.2
Nonconforming Work, Acceptance of
9.6.6, 9.9.3, **12.3**
Nonconforming Work, Rejection and Correction of
2.4, 2.5, 3.5, 4.2.6, 6.2.4, 9.5.1, 9.8.2, 9.9.3, 9.10.4, 12.2

Init.
/
AIA Document A201™ – 2017. Copyright © 1911, 1915, 1918, 1925, 1937, 1951, 1958, 1961, 1963, 1966, 1970, 1976, 1987, 1997, 2007 and 2017 by The American Institute of Architects. All rights reserved. WARNING: This AIA® Document is protected by U.S. Copyright Law and International Treaties. Unauthorized reproduction or distribution of this AIA® Document, or any portion of it, may result in severe civil and criminal penalties, and will be prosecuted to the maximum extent possible under the law. To report copyright violations of AIA Contract Documents, e-mail The American Institute of Architects' legal counsel, copyright@aia.org.

Notice
1.6, 1.6.1, 1.6.2, 2.1.2, 2.2.2., 2.2.3, 2.2.4, 2.5, 3.2.4, 3.3.1, 3.7.4, 3.7.5, 3.9.2, 3.12.9, 3.12.10, 5.2.1, 7.4, 8.2.2 9.6.8, 9.7, 9.10.1, 10.2.8, 10.3.2, 11.5, 12.2.2.1, 13.4.1, 13.4.2, 14.1, 14.2.2, 14.4.2, 15.1.3, 15.1.5, 15.1.6, 15.4.1
Notice of Cancellation or Expiration of Insurance
11.1.4, 11.2.3
Notice of Claims
1.6.2, 2.1.2, 3.7.4, 9.6.8, 10.2.8, **15.1.3**, 15.1.5, 15.1.6, 15.2.8, 15.3.2, 15.4.1
Notice of Testing and Inspections
13.4.1, 13.4.2
Observations, Contractor's
3.2, 3.7.4
Occupancy
2.3.1, 9.6.6, 9.8
Orders, Written
1.1.1, 2.4, 3.9.2, 7, 8.2.2, 11.5, 12.1, 12.2.2.1, 13.4.2, 14.3.1
OWNER
2
Owner, Definition of
2.1.1
Owner, Evidence of Financial Arrangements
2.2, 13.2.2, 14.1.1.4
Owner, Information and Services Required of the
2.1.2, **2.2**, 2.3, 3.2.2, 3.12.10, 6.1.3, 6.1.4, 6.2.5, 9.3.2, 9.6.1, 9.6.4, 9.9.2, 9.10.3, 10.3.3, 11.2, 13.4.1, 13.4.2, 14.1.1.4, 14.1.4, 15.1.4
Owner's Authority
1.5, 2.1.1, 2.3.32.4, 2.5, 3.4.2, 3.8.1, 3.12.10, 3.14.2, 4.1.2, 4.2.4, 4.2.9, 5.2.1, 5.2.4, 5.4.1, 6.1, 6.3, 7.2.1, 7.3.1, 8.2.2, 8.3.1, 9.3.2, 9.5.1, 9.6.4, 9.9.1, 9.10.2, 10.3.2, 11.4, 11.5, 12.2.2, 12.3, 13.2.2, 14.3, 14.4, 15.2.7
Owner's Insurance
11.2
Owner's Relationship with Subcontractors
1.1.2, 5.2, 5.3, 5.4, 9.6.4, 9.10.2, 14.2.2
Owner's Right to Carry Out the Work
2.5, 14.2.2
Owner's Right to Clean Up
6.3
Owner's Right to Perform Construction and to Award Separate Contracts
6.1
Owner's Right to Stop the Work
2.4
Owner's Right to Suspend the Work
14.3
Owner's Right to Terminate the Contract
14.2, 14.4
Ownership and Use of Drawings, Specifications and Other Instruments of Service
1.1.1, 1.1.6, 1.1.7, **1.5**, 2.3.6, 3.2.2, 3.11, 3.17, 4.2.12, 5.3
Partial Occupancy or Use
9.6.6, **9.9**
Patching, Cutting and
3.14, 6.2.5
Patents
3.17
Payment, Applications for
4.2.5, 7.3.9, 9.2, **9.3**, 9.4, 9.5, 9.6.3, 9.7, 9.8.5, 9.10.1, 14.2.3, 14.2.4, 14.4.3
Payment, Certificates for
4.2.5, 4.2.9, 9.3.3, **9.4**, 9.5, 9.6.1, 9.6.6, 9.7, 9.10.1, 9.10.3, 14.1.1.3, 14.2.4
Payment, Failure of
9.5.1.3, **9.7**, 9.10.2, 13.5, 14.1.1.3, 14.2.1.2
Payment, Final
4.2.1, 4.2.9, **9.10**, 12.3, 14.2.4, 14.4.3
Payment Bond, Performance Bond and
7.3.4.4, 9.6.7, 9.10.3, **11.1.2**
Payments, Progress
9.3, **9.6**, 9.8.5, 9.10.3, 14.2.3, 15.1.4
PAYMENTS AND COMPLETION
9
Payments to Subcontractors
5.4.2, 9.5.1.3, 9.6.2, 9.6.3, 9.6.4, 9.6.7, 14.2.1.2
PCB
10.3.1
Performance Bond and Payment Bond
7.3.4.4, 9.6.7, 9.10.3, **11.1.2**
Permits, Fees, Notices and Compliance with Laws
2.3.1, **3.7**, 3.13, 7.3.4.4, 10.2.2
PERSONS AND PROPERTY, PROTECTION OF
10
Polychlorinated Biphenyl
10.3.1
Product Data, Definition of
3.12.2
Product Data and Samples, Shop Drawings
3.11, **3.12**, 4.2.7
Progress and Completion
4.2.2, **8.2**, 9.8, 9.9.1, 14.1.4, 15.1.4
Progress Payments
9.3, **9.6**, 9.8.5, 9.10.3, 14.2.3, 15.1.4
Project, Definition of
1.1.4
Project Representatives
4.2.10
Property Insurance
10.2.5, **11.2**
Proposal Requirements
1.1.1
PROTECTION OF PERSONS AND PROPERTY
10
Regulations and Laws
1.5, 2.3.2, 3.2.3, 3.6, 3.7, 3.12.10, 3.13, 9.6.4, 9.9.1, 10.2.2, 13.1, 13.3, 13.4.1, 13.4.2, 13.5, 14, 15.2.8, 15.4
Rejection of Work
4.2.6, 12.2.1

Init.
/
AIA Document A201™ – 2017. Copyright © 1911, 1915, 1918, 1925, 1937, 1951, 1958, 1961, 1963, 1966, 1970, 1976, 1987, 1997, 2007 and 2017 by The American Institute of Architects. All rights reserved. WARNING: This AIA® Document is protected by U.S. Copyright Law and International Treaties. Unauthorized reproduction or distribution of this AIA® Document, or any portion of it, may result in severe civil and criminal penalties, and will be prosecuted to the maximum extent possible under the law. To report copyright violations of AIA Contract Documents, e-mail The American Institute of Architects' legal counsel, copyright@aia.org.

Releases and Waivers of Liens
9.3.1, 9.10.2
Representations
3.2.1, 3.5, 3.12.6, 8.2.1, 9.3.3, 9.4.2, 9.5.1, 9.10.1
Representatives
2.1.1, 3.1.1, 3.9, 4.1.1, 4.2.10, 13.2.1
Responsibility for Those Performing the Work
3.3.2, 3.18, 4.2.2, 4.2.3, 5.3, 6.1.3, 6.2, 6.3, 9.5.1, 10
Retainage
9.3.1, 9.6.2, 9.8.5, 9.9.1, 9.10.2, 9.10.3
Review of Contract Documents and Field Conditions by Contractor
3.2, 3.12.7, 6.1.3
Review of Contractor's Submittals by Owner and Architect
3.10.1, 3.10.2, 3.11, 3.12, 4.2, 5.2, 6.1.3, 9.2, 9.8.2
Review of Shop Drawings, Product Data and Samples by Contractor
3.12
Rights and Remedies
1.1.2, 2.4, 2.5, 3.5, 3.7.4, 3.15.2, 4.2.6, 5.3, 5.4, 6.1, 6.3, 7.3.1, 8.3, 9.5.1, 9.7, 10.2.5, 10.3, 12.2.1, 12.2.2, 12.2.4, **13.3**, 14, 15.4
Royalties, Patents and Copyrights
3.17
Rules and Notices for Arbitration
15.4.1
Safety of Persons and Property
10.2, 10.4
Safety Precautions and Programs
3.3.1, 4.2.2, 4.2.7, 5.3, **10.1**, 10.2, 10.4
Samples, Definition of
3.12.3
Samples, Shop Drawings, Product Data and
3.11, **3.12**, 4.2.7
Samples at the Site, Documents and
3.11
Schedule of Values
9.2, 9.3.1
Schedules, Construction
3.10, 3.12.1, 3.12.2, 6.1.3, 15.1.6.2
Separate Contracts and Contractors
1.1.4, 3.12.5, 3.14.2, 4.2.4, 4.2.7, 6, 8.3.1, 12.1.2
Separate Contractors, Definition of
6.1.1
Shop Drawings, Definition of
3.12.1
Shop Drawings, Product Data and Samples
3.11, **3.12**, 4.2.7
Site, Use of
3.13, 6.1.1, 6.2.1
Site Inspections
3.2.2, 3.3.3, 3.7.1, 3.7.4, 4.2, 9.9.2, 9.4.2, 9.10.1, 13.4
Site Visits, Architect's
3.7.4, 4.2.2, 4.2.9, 9.4.2, 9.5.1, 9.9.2, 9.10.1, 13.4
Special Inspections and Testing
4.2.6, 12.2.1, 13.4
Specifications, Definition of
1.1.6
Specifications
1.1.1, **1.1.6**, 1.2.2, 1.5, 3.12.10, 3.17, 4.2.14
Statute of Limitations
15.1.2, 15.4.1.1
Stopping the Work
2.2.2, 2.4, 9.7, 10.3, 14.1
Stored Materials
6.2.1, 9.3.2, 10.2.1.2, 10.2.4
Subcontractor, Definition of
5.1.1
SUBCONTRACTORS
5
Subcontractors, Work by
1.2.2, 3.3.2, 3.12.1, 3.18, 4.2.3, 5.2.3, 5.3, 5.4, 9.3.1.2, 9.6.7
Subcontractual Relations
5.3, 5.4, 9.3.1.2, 9.6, 9.10, 10.2.1, 14.1, 14.2.1
Submittals
3.10, 3.11, 3.12, 4.2.7, 5.2.1, 5.2.3, 7.3.4, 9.2, 9.3, 9.8, 9.9.1, 9.10.2, 9.10.3
Submittal Schedule
3.10.2, 3.12.5, 4.2.7
Subrogation, Waivers of
6.1.1, **11.3**
Substances, Hazardous
10.3
Substantial Completion
4.2.9, 8.1.1, 8.1.3, 8.2.3, 9.4.2, **9.8**, 9.9.1, 9.10.3, 12.2, 15.1.2
Substantial Completion, Definition of
9.8.1
Substitution of Subcontractors
5.2.3, 5.2.4
Substitution of Architect
2.3.3
Substitutions of Materials
3.4.2, 3.5, 7.3.8
Sub-subcontractor, Definition of
5.1.2
Subsurface Conditions
3.7.4
Successors and Assigns
13.2
Superintendent
3.9, 10.2.6
Supervision and Construction Procedures
1.2.2, **3.3**, 3.4, 3.12.10, 4.2.2, 4.2.7, 6.1.3, 6.2.4, 7.1.3, 7.3.4, 8.2, 8.3.1, 9.4.2, 10, 12, 14, 15.1.4
Suppliers
1.5, 3.12.1, 4.2.4, 4.2.6, 5.2.1, 9.3, 9.4.2, 9.5.4, 9.6, 9.10.5, 14.2.1
Surety
5.4.1.2, 9.6.8, 9.8.5, 9.10.2, 9.10.3, 11.1.2, 14.2.2, 15.2.7
Surety, Consent of
9.8.5, 9.10.2, 9.10.3

Init.
/
AIA Document A201™ – 2017. Copyright © 1911, 1915, 1918, 1925, 1937, 1951, 1958, 1961, 1963, 1966, 1970, 1976, 1987, 1997, 2007 and 2017 by The American Institute of Architects. **All rights reserved. WARNING:** This AIA® Document is protected by U.S. Copyright Law and International Treaties. Unauthorized reproduction or distribution of this AIA® Document, or any portion of it, may result in severe civil and criminal penalties, and will be prosecuted to the maximum extent possible under the law. To report copyright violations of AIA Contract Documents, e-mail The American Institute of Architects' legal counsel, copyright@aia.org.

Surveys
1.1.7, 2.3.4
Suspension by the Owner for Convenience
14.3
Suspension of the Work
3.7.5, 5.4.2, 14.3
Suspension or Termination of the Contract
5.4.1.1, 14
Taxes
3.6, 3.8.2.1, 7.3.4.4
Termination by the Contractor
14.1, 15.1.7
Termination by the Owner for Cause
5.4.1.1, **14.2**, 15.1.7
Termination by the Owner for Convenience
14.4
Termination of the Architect
2.3.3
Termination of the Contractor Employment
14.2.2

TERMINATION OR SUSPENSION OF THE CONTRACT
14
Tests and Inspections
3.1.3, 3.3.3, 3.7.1, 4.2.2, 4.2.6, 4.2.9, 9.4.2, 9.8.3, 9.9.2, 9.10.1, 10.3.2, 12.2.1, **13.4**
TIME
8
Time, Delays and Extensions of
3.2.4, 3.7.4, 5.2.3, 7.2.1, 7.3.1, 7.4, **8.3**, 9.5.1, 9.7, 10.3.2, 10.4, 14.3.2, 15.1.6, 15.2.5
Time Limits
2.1.2, 2.2, 2.5, 3.2.2, 3.10, 3.11, 3.12.5, 3.15.1, 4.2, 5.2, 5.3, 5.4, 6.2.4, 7.3, 7.4, 8.2, 9.2, 9.3.1, 9.3.3, 9.4.1, 9.5, 9.6, 9.7, 9.8, 9.9, 9.10, 12.2, 13.4, 14, 15.1.2, 15.1.3, 15.4
Time Limits on Claims
3.7.4, 10.2.8, 15.1.2, 15.1.3
Title to Work
9.3.2, 9.3.3

UNCOVERING AND CORRECTION OF WORK
12
Uncovering of Work
12.1
Unforeseen Conditions, Concealed or Unknown
3.7.4, 8.3.1, 10.3
Unit Prices
7.3.3.2, 9.1.2
Use of Documents
1.1.1, 1.5, 2.3.6, 3.12.6, 5.3
Use of Site
3.13, 6.1.1, 6.2.1
Values, Schedule of
9.2, 9.3.1
Waiver of Claims by the Architect
13.3.2
Waiver of Claims by the Contractor
9.10.5, 13.3.2, **15.1.7**
Waiver of Claims by the Owner
9.9.3, 9.10.3, 9.10.4, 12.2.2.1, 13.3.2, 14.2.4, **15.1.7**
Waiver of Consequential Damages
14.2.4, 15.1.7
Waiver of Liens
9.3, 9.10.2, 9.10.4
Waivers of Subrogation
6.1.1, **11.3**
Warranty
3.5, 4.2.9, 9.3.3, 9.8.4, 9.9.1, 9.10.2, 9.10.4, 12.2.2, 15.1.2
Weather Delays
8.3, 15.1.6.2
Work, Definition of
1.1.3
Written Consent
1.5.2, 3.4.2, 3.7.4, 3.12.8, 3.14.2, 4.1.2, 9.3.2, 9.10.3, 13.2, 13.3.2, 15.4.4.2
Written Interpretations
4.2.11, 4.2.12
Written Orders
1.1.1, 2.4, 3.9, 7, 8.2.2, 12.1, 12.2, 13.4.2, 14.3.1

Init.
/
AIA Document A201™ – 2017. Copyright © 1911, 1915, 1918, 1925, 1937, 1951, 1958, 1961, 1963, 1966, 1970, 1976, 1987, 1997, 2007 and 2017 by The American Institute of Architects. **All rights reserved.** WARNING: This AIA® Document is protected by U.S. Copyright Law and International Treaties. Unauthorized reproduction or distribution of this AIA® Document, or any portion of it, may result in severe civil and criminal penalties, and will be prosecuted to the maximum extent possible under the law. To report copyright violations of AIA Contract Documents, e-mail The American Institute of Architects' legal counsel, copyright@aia.org.

ARTICLE 1 GENERAL PROVISIONS

§ 1.1 Basic Definitions

§ 1.1.1 The Contract Documents

The Contract Documents are enumerated in the Agreement between the Owner and Contractor (hereinafter the Agreement) and consist of the Agreement, Conditions of the Contract (General, Supplementary and other Conditions), Drawings, Specifications, Addenda issued prior to execution of the Contract, other documents listed in the Agreement, and Modifications issued after execution of the Contract. A Modification is (1) a written amendment to the Contract signed by both parties, (2) a Change Order, (3) a Construction Change Directive, or (4) a written order for a minor change in the Work issued by the Architect. Unless specifically enumerated in the Agreement, the Contract Documents do not include the advertisement or invitation to bid, Instructions to Bidders, sample forms, other information furnished by the Owner in anticipation of receiving bids or proposals, the Contractor's bid or proposal, or portions of Addenda relating to bidding or proposal requirements.

§ 1.1.2 The Contract

The Contract Documents form the Contract for Construction. The Contract represents the entire and integrated agreement between the parties hereto and supersedes prior negotiations, representations, or agreements, either written or oral. The Contract may be amended or modified only by a Modification. The Contract Documents shall not be construed to create a contractual relationship of any kind (1) between the Contractor and the Architect or the Architect's consultants, (2) between the Owner and a Subcontractor or a Sub-subcontractor, (3) between the Owner and the Architect or the Architect's consultants, or (4) between any persons or entities other than the Owner and the Contractor. The Architect shall, however, be entitled to performance and enforcement of obligations under the Contract intended to facilitate performance of the Architect's duties.

§ 1.1.3 The Work

The term "Work" means the construction and services required by the Contract Documents, whether completed or partially completed, and includes all other labor, materials, equipment, and services provided or to be provided by the Contractor to fulfill the Contractor's obligations. The Work may constitute the whole or a part of the Project.

§ 1.1.4 The Project

The Project is the total construction of which the Work performed under the Contract Documents may be the whole or a part and which may include construction by the Owner and by Separate Contractors.

§ 1.1.5 The Drawings

The Drawings are the graphic and pictorial portions of the Contract Documents showing the design, location and dimensions of the Work, generally including plans, elevations, sections, details, schedules, and diagrams.

§ 1.1.6 The Specifications

The Specifications are that portion of the Contract Documents consisting of the written requirements for materials, equipment, systems, standards and workmanship for the Work, and performance of related services.

§ 1.1.7 Instruments of Service

Instruments of Service are representations, in any medium of expression now known or later developed, of the tangible and intangible creative work performed by the Architect and the Architect's consultants under their respective professional services agreements. Instruments of Service may include, without limitation, studies, surveys, models, sketches, drawings, specifications, and other similar materials.

§ 1.1.8 Initial Decision Maker

The Initial Decision Maker is the person identified in the Agreement to render initial decisions on Claims in accordance with Section 15.2. The Initial Decision Maker shall not show partiality to the Owner or Contractor and shall not be liable for results of interpretations or decisions rendered in good faith.

§ 1.2 Correlation and Intent of the Contract Documents

§ 1.2.1 The intent of the Contract Documents is to include all items necessary for the proper execution and completion of the Work by the Contractor. The Contract Documents are complementary, and what is required by one shall be as binding as if required by all; performance by the Contractor shall be required only to the extent consistent with the Contract Documents and reasonably inferable from them as being necessary to produce the indicated results.

§ 1.2.1.1 The invalidity of any provision of the Contract Documents shall not invalidate the Contract or its remaining

AIA Document A201™ – 2017. Copyright © 1911, 1915, 1918, 1925, 1937, 1951, 1958, 1961, 1963, 1966, 1970, 1976, 1987, 1997, 2007 and 2017 by The American Institute of Architects. All rights reserved. WARNING: This AIA® Document is protected by U.S. Copyright Law and International Treaties. Unauthorized reproduction or distribution of this AIA® Document, or any portion of it, may result in severe civil and criminal penalties, and will be prosecuted to the maximum extent possible under the law. To report copyright violations of AIA Contract Documents, e-mail The American Institute of Architects' legal counsel, copyright@aia.org.

provisions. If it is determined that any provision of the Contract Documents violates any law, or is otherwise invalid or unenforceable, then that provision shall be revised to the extent necessary to make that provision legal and enforceable. In such case the Contract Documents shall be construed, to the fullest extent permitted by law, to give effect to the parties' intentions and purposes in executing the Contract.

§ 1.2.2 Organization of the Specifications into divisions, sections and articles, and arrangement of Drawings shall not control the Contractor in dividing the Work among Subcontractors or in establishing the extent of Work to be performed by any trade.

§ 1.2.3 Unless otherwise stated in the Contract Documents, words that have well-known technical or construction industry meanings are used in the Contract Documents in accordance with such recognized meanings.

§ 1.3 Capitalization

Terms capitalized in these General Conditions include those that are (1) specifically defined, (2) the titles of numbered articles, or (3) the titles of other documents published by the American Institute of Architects.

§ 1.4 Interpretation

In the interest of brevity the Contract Documents frequently omit modifying words such as "all" and "any" and articles such as "the" and "an," but the fact that a modifier or an article is absent from one statement and appears in another is not intended to affect the interpretation of either statement.

§ 1.5 Ownership and Use of Drawings, Specifications, and Other Instruments of Service

§ 1.5.1 The Architect and the Architect's consultants shall be deemed the authors and owners of their respective Instruments of Service, including the Drawings and Specifications, and retain all common law, statutory, and other reserved rights in their Instruments of Service, including copyrights. The Contractor, Subcontractors, Sub-subcontractors, and suppliers shall not own or claim a copyright in the Instruments of Service. Submittal or distribution to meet official regulatory requirements or for other purposes in connection with the Project is not to be construed as publication in derogation of the Architect's or Architect's consultants' reserved rights.

§ 1.5.2 The Contractor, Subcontractors, Sub-subcontractors, and suppliers are authorized to use and reproduce the Instruments of Service provided to them, subject to any protocols established pursuant to Sections 1.7 and 1.8, solely and exclusively for execution of the Work. All copies made under this authorization shall bear the copyright notice, if any, shown on the Instruments of Service. The Contractor, Subcontractors, Sub-subcontractors, and suppliers may not use the Instruments of Service on other projects or for additions to the Project outside the scope of the Work without the specific written consent of the Owner, Architect, and the Architect's consultants.

§ 1.6 Notice

§ 1.6.1 Except as otherwise provided in Section 1.6.2, where the Contract Documents require one party to notify or give notice to the other party, such notice shall be provided in writing to the designated representative of the party to whom the notice is addressed and shall be deemed to have been duly served if delivered in person, by mail, by courier, or by electronic transmission if a method for electronic transmission is set forth in the Agreement.

§ 1.6.2 Notice of Claims as provided in Section 15.1.3 shall be provided in writing and shall be deemed to have been duly served only if delivered to the designated representative of the party to whom the notice is addressed by certified or registered mail, or by courier providing proof of delivery.

§ 1.7 Digital Data Use and Transmission

The parties shall agree upon protocols governing the transmission and use of Instruments of Service or any other information or documentation in digital form. The parties will use AIA Document E203™–2013, Building Information Modeling and Digital Data Exhibit, to establish the protocols for the development, use, transmission, and exchange of digital data.

§ 1.8 Building Information Models Use and Reliance

Any use of, or reliance on, all or a portion of a building information model without agreement to protocols governing the use of, and reliance on, the information contained in the model and without having those protocols set forth in AIA Document E203™–2013, Building Information Modeling and Digital Data Exhibit, and the requisite AIA Document G202™–2013, Project Building Information Modeling Protocol Form, shall be at the using or relying party's sole risk and without liability to the other party and its contractors or consultants, the authors of, or contributors to, the building

AIA Document A201™ – 2017. Copyright © 1911, 1915, 1918, 1925, 1937, 1951, 1958, 1961, 1963, 1966, 1970, 1976, 1987, 1997, 2007 and 2017 by The American Institute of Architects. All rights reserved. WARNING: This AIA® Document is protected by U.S. Copyright Law and International Treaties. Unauthorized reproduction or distribution of this AIA® Document, or any portion of it, may result in severe civil and criminal penalties, and will be prosecuted to the maximum extent possible under the law. To report copyright violations of AIA Contract Documents, e-mail The American Institute of Architects' legal counsel, copyright@aia.org.

information model, and each of their agents and employees.

ARTICLE 2 OWNER

§ 2.1 General

§ 2.1.1 The Owner is the person or entity identified as such in the Agreement and is referred to throughout the Contract Documents as if singular in number. The Owner shall designate in writing a representative who shall have express authority to bind the Owner with respect to all matters requiring the Owner's approval or authorization. Except as otherwise provided in Section 4.2.1, the Architect does not have such authority. The term "Owner" means the Owner or the Owner's authorized representative.

§ 2.1.2 The Owner shall furnish to the Contractor, within fifteen days after receipt of a written request, information necessary and relevant for the Contractor to evaluate, give notice of, or enforce mechanic's lien rights. Such information shall include a correct statement of the record legal title to the property on which the Project is located, usually referred to as the site, and the Owner's interest therein.

§ 2.2 Evidence of the Owner's Financial Arrangements

§ 2.2.1 Prior to commencement of the Work and upon written request by the Contractor, the Owner shall furnish to the Contractor reasonable evidence that the Owner has made financial arrangements to fulfill the Owner's obligations under the Contract. The Contractor shall have no obligation to commence the Work until the Owner provides such evidence. If commencement of the Work is delayed under this Section 2.2.1, the Contract Time shall be extended appropriately.

§ 2.2.2 Following commencement of the Work and upon written request by the Contractor, the Owner shall furnish to the Contractor reasonable evidence that the Owner has made financial arrangements to fulfill the Owner's obligations under the Contract only if (1) the Owner fails to make payments to the Contractor as the Contract Documents require; (2) the Contractor identifies in writing a reasonable concern regarding the Owner's ability to make payment when due; or (3) a change in the Work materially changes the Contract Sum. If the Owner fails to provide such evidence, as required, within fourteen days of the Contractor's request, the Contractor may immediately stop the Work and, in that event, shall notify the Owner that the Work has stopped. However, if the request is made because a change in the Work materially changes the Contract Sum under (3) above, the Contractor may immediately stop only that portion of the Work affected by the change until reasonable evidence is provided. If the Work is stopped under this Section 2.2.2, the Contract Time shall be extended appropriately and the Contract Sum shall be increased by the amount of the Contractor's reasonable costs of shutdown, delay and start-up, plus interest as provided in the Contract Documents.

§ 2.2.3 After the Owner furnishes evidence of financial arrangements under this Section 2.2, the Owner shall not materially vary such financial arrangements without prior notice to the Contractor.

§ 2.2.4 Where the Owner has designated information furnished under this Section 2.2 as "confidential," the Contractor shall keep the information confidential and shall not disclose it to any other person. However, the Contractor may disclose "confidential" information, after seven (7) days' notice to the Owner, where disclosure is required by law, including a subpoena or other form of compulsory legal process issued by a court or governmental entity, or by court or arbitrator(s) order. The Contractor may also disclose "confidential" information to its employees, consultants, sureties, Subcontractors and their employees, Sub-subcontractors, and others who need to know the content of such information solely and exclusively for the Project and who agree to maintain the confidentiality of such information.

§ 2.3 Information and Services Required of the Owner

§ 2.3.1 Except for permits and fees that are the responsibility of the Contractor under the Contract Documents, including those required under Section 3.7.1, the Owner shall secure and pay for necessary approvals, easements, assessments and charges required for construction, use or occupancy of permanent structures or for permanent changes in existing facilities.

§ 2.3.2 The Owner shall retain an architect lawfully licensed to practice architecture, or an entity lawfully practicing architecture, in the jurisdiction where the Project is located. That person or entity is identified as the Architect in the Agreement and is referred to throughout the Contract Documents as if singular in number.

§ 2.3.3 If the employment of the Architect terminates, the Owner shall employ a successor to whom the Contractor has no reasonable objection and whose status under the Contract Documents shall be that of the Architect.

§ 2.3.4 The Owner shall furnish surveys describing physical characteristics, legal limitations and utility locations for the

AIA Document A201™ – 2017. Copyright © 1911, 1915, 1918, 1925, 1937, 1951, 1958, 1961, 1963, 1966, 1970, 1976, 1987, 1997, 2007 and 2017 by The American Institute of Architects. All rights reserved. WARNING: This AIA® Document is protected by U.S. Copyright Law and International Treaties. Unauthorized reproduction or distribution of this AIA® Document, or any portion of it, may result in severe civil and criminal penalties, and will be prosecuted to the maximum extent possible under the law. To report copyright violations of AIA Contract Documents, e-mail The American Institute of Architects' legal counsel, copyright@aia.org.

site of the Project, and a legal description of the site. The Contractor shall be entitled to rely on the accuracy of information furnished by the Owner but shall exercise proper precautions relating to the safe performance of the Work.

§ 2.3.5 The Owner shall furnish information or services required of the Owner by the Contract Documents with reasonable promptness. The Owner shall also furnish any other information or services under the Owner's control and relevant to the Contractor's performance of the Work with reasonable promptness after receiving the Contractor's written request for such information or services.

§ 2.3.6 Unless otherwise provided in the Contract Documents, the Owner shall furnish to the Contractor one copy of the Contract Documents for purposes of making reproductions pursuant to Section 1.5.2.

§ 2.4 Owner's Right to Stop the Work

If the Contractor fails to correct Work that is not in accordance with the requirements of the Contract Documents as required by Section 12.2 or repeatedly fails to carry out Work in accordance with the Contract Documents, the Owner may issue a written order to the Contractor to stop the Work, or any portion thereof, until the cause for such order has been eliminated; however, the right of the Owner to stop the Work shall not give rise to a duty on the part of the Owner to exercise this right for the benefit of the Contractor or any other person or entity, except to the extent required by Section 6.1.3.

§ 2.5 Owner's Right to Carry Out the Work

If the Contractor defaults or neglects to carry out the Work in accordance with the Contract Documents and fails within a ten-day period after receipt of notice from the Owner to commence and continue correction of such default or neglect with diligence and promptness, the Owner may, without prejudice to other remedies the Owner may have, correct such default or neglect. Such action by the Owner and amounts charged to the Contractor are both subject to prior approval of the Architect and the Architect may, pursuant to Section 9.5.1, withhold or nullify a Certificate for Payment in whole or in part, to the extent reasonably necessary to reimburse the Owner for the reasonable cost of correcting such deficiencies, including Owner's expenses and compensation for the Architect's additional services made necessary by such default, neglect, or failure. If current and future payments are not sufficient to cover such amounts, the Contractor shall pay the difference to the Owner. If the Contractor disagrees with the actions of the Owner or the Architect, or the amounts claimed as costs to the Owner, the Contractor may file a Claim pursuant to Article 15.

ARTICLE 3 CONTRACTOR

§ 3.1 General

§ 3.1.1 The Contractor is the person or entity identified as such in the Agreement and is referred to throughout the Contract Documents as if singular in number. The Contractor shall be lawfully licensed, if required in the jurisdiction where the Project is located. The Contractor shall designate in writing a representative who shall have express authority to bind the Contractor with respect to all matters under this Contract. The term "Contractor" means the Contractor or the Contractor's authorized representative.

§ 3.1.2 The Contractor shall perform the Work in accordance with the Contract Documents.

§ 3.1.3 The Contractor shall not be relieved of its obligations to perform the Work in accordance with the Contract Documents either by activities or duties of the Architect in the Architect's administration of the Contract, or by tests, inspections or approvals required or performed by persons or entities other than the Contractor.

§ 3.2 Review of Contract Documents and Field Conditions by Contractor

§ 3.2.1 Execution of the Contract by the Contractor is a representation that the Contractor has visited the site, become generally familiar with local conditions under which the Work is to be performed, and correlated personal observations with requirements of the Contract Documents.

§ 3.2.2 Because the Contract Documents are complementary, the Contractor shall, before starting each portion of the Work, carefully study and compare the various Contract Documents relative to that portion of the Work, as well as the information furnished by the Owner pursuant to Section 2.3.4, shall take field measurements of any existing conditions related to that portion of the Work, and shall observe any conditions at the site affecting it. These obligations are for the purpose of facilitating coordination and construction by the Contractor and are not for the purpose of discovering errors, omissions, or inconsistencies in the Contract Documents; however, the Contractor shall promptly report to the Architect any errors, inconsistencies or omissions discovered by or made known to the Contractor as a request for information in such form as the Architect may require. It is recognized that the Contractor's review is made in the Contractor's

AIA Document A201™ – 2017. Copyright © 1911, 1915, 1918, 1925, 1937, 1951, 1958, 1961, 1963, 1966, 1970, 1976, 1987, 1997, 2007 and 2017 by The American Institute of Architects. All rights reserved. WARNING: This AIA® Document is protected by U.S. Copyright Law and International Treaties. Unauthorized reproduction or distribution of this AIA® Document, or any portion of it, may result in severe civil and criminal penalties, and will be prosecuted to the maximum extent possible under the law. To report copyright violations of AIA Contract Documents, e-mail The American Institute of Architects' legal counsel, copyright@aia.org.

capacity as a contractor and not as a licensed design professional, unless otherwise specifically provided in the Contract Documents.

§ 3.2.3 The Contractor is not required to ascertain that the Contract Documents are in accordance with applicable laws, statutes, ordinances, codes, rules and regulations, or lawful orders of public authorities, but the Contractor shall promptly report to the Architect any nonconformity discovered by or made known to the Contractor as a request for information in such form as the Architect may require.

§ 3.2.4 If the Contractor believes that additional cost or time is involved because of clarifications or instructions the Architect issues in response to the Contractor's notices or requests for information pursuant to Sections 3.2.2 or 3.2.3, the Contractor shall submit Claims as provided in Article 15. If the Contractor fails to perform the obligations of Sections 3.2.2 or 3.2.3, the Contractor shall pay such costs and damages to the Owner, subject to Section 15.1.7, as would have been avoided if the Contractor had performed such obligations. If the Contractor performs those obligations, the Contractor shall not be liable to the Owner or Architect for damages resulting from errors, inconsistencies or omissions in the Contract Documents, for differences between field measurements or conditions and the Contract Documents, or for nonconformities of the Contract Documents to applicable laws, statutes, ordinances, codes, rules and regulations, and lawful orders of public authorities.

§ 3.3 Supervision and Construction Procedures

§ 3.3.1 The Contractor shall supervise and direct the Work, using the Contractor's best skill and attention. The Contractor shall be solely responsible for, and have control over, construction means, methods, techniques, sequences, and procedures, and for coordinating all portions of the Work under the Contract. If the Contract Documents give specific instructions concerning construction means, methods, techniques, sequences, or procedures, the Contractor shall evaluate the jobsite safety thereof and shall be solely responsible for the jobsite safety of such means, methods, techniques, sequences, or procedures. If the Contractor determines that such means, methods, techniques, sequences or procedures may not be safe, the Contractor shall give timely notice to the Owner and Architect, and shall propose alternative means, methods, techniques, sequences, or procedures. The Architect shall evaluate the proposed alternative solely for conformance with the design intent for the completed construction. Unless the Architect objects to the Contractor's proposed alternative, the Contractor shall perform the Work using its alternative means, methods, techniques, sequences, or procedures.

§ 3.3.2 The Contractor shall be responsible to the Owner for acts and omissions of the Contractor's employees, Subcontractors and their agents and employees, and other persons or entities performing portions of the Work for, or on behalf of, the Contractor or any of its Subcontractors.

§ 3.3.3 The Contractor shall be responsible for inspection of portions of Work already performed to determine that such portions are in proper condition to receive subsequent Work.

§ 3.4 Labor and Materials

§ 3.4.1 Unless otherwise provided in the Contract Documents, the Contractor shall provide and pay for labor, materials, equipment, tools, construction equipment and machinery, water, heat, utilities, transportation, and other facilities and services necessary for proper execution and completion of the Work, whether temporary or permanent and whether or not incorporated or to be incorporated in the Work.

§ 3.4.2 Except in the case of minor changes in the Work approved by the Architect in accordance with Section 3.12.8 or ordered by the Architect in accordance with Section 7.4, the Contractor may make substitutions only with the consent of the Owner, after evaluation by the Architect and in accordance with a Change Order or Construction Change Directive.

§ 3.4.3 The Contractor shall enforce strict discipline and good order among the Contractor's employees and other persons carrying out the Work. The Contractor shall not permit employment of unfit persons or persons not properly skilled in tasks assigned to them.

§ 3.5 Warranty

§ 3.5.1 The Contractor warrants to the Owner and Architect that materials and equipment furnished under the Contract will be of good quality and new unless the Contract Documents require or permit otherwise. The Contractor further warrants that the Work will conform to the requirements of the Contract Documents and will be free from defects, except for those inherent in the quality of the Work the Contract Documents require or permit. Work, materials, or equipment not conforming to these requirements may be considered defective. The Contractor's warranty excludes

AIA Document A201™ – 2017. Copyright © 1911, 1915, 1918, 1925, 1937, 1951, 1958, 1961, 1963, 1966, 1970, 1976, 1987, 1997, 2007 and 2017 by The American Institute of Architects. **All rights reserved.** WARNING: This AIA® Document is protected by U.S. Copyright Law and International Treaties. Unauthorized reproduction or distribution of this AIA® Document, or any portion of it, may result in severe civil and criminal penalties, and will be prosecuted to the maximum extent possible under the law. To report copyright violations of AIA Contract Documents, e-mail The American Institute of Architects' legal counsel, copyright@aia.org.

remedy for damage or defect caused by abuse, alterations to the Work not executed by the Contractor, improper or insufficient maintenance, improper operation, or normal wear and tear and normal usage. If required by the Architect, the Contractor shall furnish satisfactory evidence as to the kind and quality of materials and equipment.

§ 3.5.2 All material, equipment, or other special warranties required by the Contract Documents shall be issued in the name of the Owner, or shall be transferable to the Owner, and shall commence in accordance with Section 9.8.4.

§ 3.6 Taxes

The Contractor shall pay sales, consumer, use and similar taxes for the Work provided by the Contractor that are legally enacted when bids are received or negotiations concluded, whether or not yet effective or merely scheduled to go into effect.

§ 3.7 Permits, Fees, Notices and Compliance with Laws

§ 3.7.1 Unless otherwise provided in the Contract Documents, the Contractor shall secure and pay for the building permit as well as for other permits, fees, licenses, and inspections by government agencies necessary for proper execution and completion of the Work that are customarily secured after execution of the Contract and legally required at the time bids are received or negotiations concluded.

§ 3.7.2 The Contractor shall comply with and give notices required by applicable laws, statutes, ordinances, codes, rules and regulations, and lawful orders of public authorities applicable to performance of the Work.

§ 3.7.3 If the Contractor performs Work knowing it to be contrary to applicable laws, statutes, ordinances, codes, rules and regulations, or lawful orders of public authorities, the Contractor shall assume appropriate responsibility for such Work and shall bear the costs attributable to correction.

§ 3.7.4 Concealed or Unknown Conditions

If the Contractor encounters conditions at the site that are (1) subsurface or otherwise concealed physical conditions that differ materially from those indicated in the Contract Documents or (2) unknown physical conditions of an unusual nature that differ materially from those ordinarily found to exist and generally recognized as inherent in construction activities of the character provided for in the Contract Documents, the Contractor shall promptly provide notice to the Owner and the Architect before conditions are disturbed and in no event later than 14 days after first observance of the conditions. The Architect will promptly investigate such conditions and, if the Architect determines that they differ materially and cause an increase or decrease in the Contractor's cost of, or time required for, performance of any part of the Work, will recommend that an equitable adjustment be made in the Contract Sum or Contract Time, or both. If the Architect determines that the conditions at the site are not materially different from those indicated in the Contract Documents and that no change in the terms of the Contract is justified, the Architect shall promptly notify the Owner and Contractor, stating the reasons. If either party disputes the Architect's determination or recommendation, that party may submit a Claim as provided in Article 15.

§ 3.7.5 If, in the course of the Work, the Contractor encounters human remains or recognizes the existence of burial markers, archaeological sites or wetlands not indicated in the Contract Documents, the Contractor shall immediately suspend any operations that would affect them and shall notify the Owner and Architect. Upon receipt of such notice, the Owner shall promptly take any action necessary to obtain governmental authorization required to resume the operations. The Contractor shall continue to suspend such operations until otherwise instructed by the Owner but shall continue with all other operations that do not affect those remains or features. Requests for adjustments in the Contract Sum and Contract Time arising from the existence of such remains or features may be made as provided in Article 15.

§ 3.8 Allowances

§ 3.8.1 The Contractor shall include in the Contract Sum all allowances stated in the Contract Documents. Items covered by allowances shall be supplied for such amounts and by such persons or entities as the Owner may direct, but the Contractor shall not be required to employ persons or entities to whom the Contractor has reasonable objection.

§ 3.8.2 Unless otherwise provided in the Contract Documents,

- **.1** allowances shall cover the cost to the Contractor of materials and equipment delivered at the site and all required taxes, less applicable trade discounts;
- **.2** Contractor's costs for unloading and handling at the site, labor, installation costs, overhead, profit, and other expenses contemplated for stated allowance amounts shall be included in the Contract Sum but not in the allowances; and

AIA Document A201™ – 2017. Copyright © 1911, 1915, 1918, 1925, 1937, 1951, 1958, 1961, 1963, 1966, 1970, 1976, 1987, 1997, 2007 and 2017 by The American Institute of Architects. **All rights reserved. WARNING: This AIA® Document is protected by U.S. Copyright Law and International Treaties. Unauthorized reproduction or distribution of this AIA® Document, or any portion of it, may result in severe civil and criminal penalties, and will be prosecuted to the maximum extent possible under the law.** To report copyright violations of AIA Contract Documents, e-mail The American Institute of Architects' legal counsel, copyright@aia.org.

.3 whenever costs are more than or less than allowances, the Contract Sum shall be adjusted accordingly by Change Order. The amount of the Change Order shall reflect (1) the difference between actual costs and the allowances under Section 3.8.2.1 and (2) changes in Contractor's costs under Section 3.8.2.2.

§ 3.8.3 Materials and equipment under an allowance shall be selected by the Owner with reasonable promptness.

§ 3.9 Superintendent

§ 3.9.1 The Contractor shall employ a competent superintendent and necessary assistants who shall be in attendance at the Project site during performance of the Work. The superintendent shall represent the Contractor, and communications given to the superintendent shall be as binding as if given to the Contractor.

§ 3.9.2 The Contractor, as soon as practicable after award of the Contract, shall notify the Owner and Architect of the name and qualifications of a proposed superintendent. Within 14 days of receipt of the information, the Architect may notify the Contractor, stating whether the Owner or the Architect (1) has reasonable objection to the proposed superintendent or (2) requires additional time for review. Failure of the Architect to provide notice within the 14-day period shall constitute notice of no reasonable objection.

§ 3.9.3 The Contractor shall not employ a proposed superintendent to whom the Owner or Architect has made reasonable and timely objection. The Contractor shall not change the superintendent without the Owner's consent, which shall not unreasonably be withheld or delayed.

§ 3.10 Contractor's Construction and Submittal Schedules

§ 3.10.1 The Contractor, promptly after being awarded the Contract, shall submit for the Owner's and Architect's information a Contractor's construction schedule for the Work. The schedule shall contain detail appropriate for the Project, including (1) the date of commencement of the Work, interim schedule milestone dates, and the date of Substantial Completion; (2) an apportionment of the Work by construction activity; and (3) the time required for completion of each portion of the Work. The schedule shall provide for the orderly progression of the Work to completion and shall not exceed time limits current under the Contract Documents. The schedule shall be revised at appropriate intervals as required by the conditions of the Work and Project.

§ 3.10.2 The Contractor, promptly after being awarded the Contract and thereafter as necessary to maintain a current submittal schedule, shall submit a submittal schedule for the Architect's approval. The Architect's approval shall not be unreasonably delayed or withheld. The submittal schedule shall (1) be coordinated with the Contractor's construction schedule, and (2) allow the Architect reasonable time to review submittals. If the Contractor fails to submit a submittal schedule, or fails to provide submittals in accordance with the approved submittal schedule, the Contractor shall not be entitled to any increase in Contract Sum or extension of Contract Time based on the time required for review of submittals.

§ 3.10.3 The Contractor shall perform the Work in general accordance with the most recent schedules submitted to the Owner and Architect.

§ 3.11 Documents and Samples at the Site

The Contractor shall make available, at the Project site, the Contract Documents, including Change Orders, Construction Change Directives, and other Modifications, in good order and marked currently to indicate field changes and selections made during construction, and the approved Shop Drawings, Product Data, Samples, and similar required submittals. These shall be in electronic form or paper copy, available to the Architect and Owner, and delivered to the Architect for submittal to the Owner upon completion of the Work as a record of the Work as constructed.

§ 3.12 Shop Drawings, Product Data and Samples

§ 3.12.1 Shop Drawings are drawings, diagrams, schedules, and other data specially prepared for the Work by the Contractor or a Subcontractor, Sub-subcontractor, manufacturer, supplier, or distributor to illustrate some portion of the Work.

§ 3.12.2 Product Data are illustrations, standard schedules, performance charts, instructions, brochures, diagrams, and other information furnished by the Contractor to illustrate materials or equipment for some portion of the Work.

§ 3.12.3 Samples are physical examples that illustrate materials, equipment, or workmanship, and establish standards by which the Work will be judged.

AIA Document A201™ – 2017. Copyright © 1911, 1915, 1918, 1925, 1937, 1951, 1958, 1961, 1963, 1966, 1970, 1976, 1987, 1997, 2007 and 2017 by The American Institute of Architects. All rights reserved. WARNING: This AIA® Document is protected by U.S. Copyright Law and International Treaties. Unauthorized reproduction or distribution of this AIA® Document, or any portion of it, may result in severe civil and criminal penalties, and will be prosecuted to the maximum extent possible under the law. To report copyright violations of AIA Contract Documents, e-mail The American Institute of Architects' legal counsel, copyright@aia.org.

§ 3.12.4 Shop Drawings, Product Data, Samples, and similar submittals are not Contract Documents. Their purpose is to demonstrate how the Contractor proposes to conform to the information given and the design concept expressed in the Contract Documents for those portions of the Work for which the Contract Documents require submittals. Review by the Architect is subject to the limitations of Section 4.2.7. Informational submittals upon which the Architect is not expected to take responsive action may be so identified in the Contract Documents. Submittals that are not required by the Contract Documents may be returned by the Architect without action.

§ 3.12.5 The Contractor shall review for compliance with the Contract Documents, approve, and submit to the Architect, Shop Drawings, Product Data, Samples, and similar submittals required by the Contract Documents, in accordance with the submittal schedule approved by the Architect or, in the absence of an approved submittal schedule, with reasonable promptness and in such sequence as to cause no delay in the Work or in the activities of the Owner or of Separate Contractors.

§ 3.12.6 By submitting Shop Drawings, Product Data, Samples, and similar submittals, the Contractor represents to the Owner and Architect that the Contractor has (1) reviewed and approved them, (2) determined and verified materials, field measurements and field construction criteria related thereto, or will do so, and (3) checked and coordinated the information contained within such submittals with the requirements of the Work and of the Contract Documents.

§ 3.12.7 The Contractor shall perform no portion of the Work for which the Contract Documents require submittal and review of Shop Drawings, Product Data, Samples, or similar submittals, until the respective submittal has been approved by the Architect.

§ 3.12.8 The Work shall be in accordance with approved submittals except that the Contractor shall not be relieved of responsibility for deviations from the requirements of the Contract Documents by the Architect's approval of Shop Drawings, Product Data, Samples, or similar submittals, unless the Contractor has specifically notified the Architect of such deviation at the time of submittal and (1) the Architect has given written approval to the specific deviation as a minor change in the Work, or (2) a Change Order or Construction Change Directive has been issued authorizing the deviation. The Contractor shall not be relieved of responsibility for errors or omissions in Shop Drawings, Product Data, Samples, or similar submittals, by the Architect's approval thereof.

§ 3.12.9 The Contractor shall direct specific attention, in writing or on resubmitted Shop Drawings, Product Data, Samples, or similar submittals, to revisions other than those requested by the Architect on previous submittals. In the absence of such notice, the Architect's approval of a resubmission shall not apply to such revisions.

§ 3.12.10 The Contractor shall not be required to provide professional services that constitute the practice of architecture or engineering unless such services are specifically required by the Contract Documents for a portion of the Work or unless the Contractor needs to provide such services in order to carry out the Contractor's responsibilities for construction means, methods, techniques, sequences, and procedures. The Contractor shall not be required to provide professional services in violation of applicable law.

§ 3.12.10.1 If professional design services or certifications by a design professional related to systems, materials, or equipment are specifically required of the Contractor by the Contract Documents, the Owner and the Architect will specify all performance and design criteria that such services must satisfy. The Contractor shall be entitled to rely upon the adequacy and accuracy of the performance and design criteria provided in the Contract Documents. The Contractor shall cause such services or certifications to be provided by an appropriately licensed design professional, whose signature and seal shall appear on all drawings, calculations, specifications, certifications, Shop Drawings, and other submittals prepared by such professional. Shop Drawings, and other submittals related to the Work, designed or certified by such professional, if prepared by others, shall bear such professional's written approval when submitted to the Architect. The Owner and the Architect shall be entitled to rely upon the adequacy and accuracy of the services, certifications, and approvals performed or provided by such design professionals, provided the Owner and Architect have specified to the Contractor the performance and design criteria that such services must satisfy. Pursuant to this Section 3.12.10, the Architect will review and approve or take other appropriate action on submittals only for the limited purpose of checking for conformance with information given and the design concept expressed in the Contract Documents.

§ 3.12.10.2 If the Contract Documents require the Contractor's design professional to certify that the Work has been performed in accordance with the design criteria, the Contractor shall furnish such certifications to the Architect at the

AIA Document A201™ – 2017. Copyright © 1911, 1915, 1918, 1925, 1937, 1951, 1958, 1961, 1963, 1966, 1970, 1976, 1987, 1997, 2007 and 2017 by The American Institute of Architects. **All rights reserved. WARNING: This AIA® Document is protected by U.S. Copyright Law and International Treaties. Unauthorized reproduction or distribution of this AIA® Document, or any portion of it, may result in severe civil and criminal penalties, and will be prosecuted to the maximum extent possible under the law.** To report copyright violations of AIA Contract Documents, e-mail The American Institute of Architects' legal counsel, copyright@aia.org.

time and in the form specified by the Architect.

§ 3.13 Use of Site

The Contractor shall confine operations at the site to areas permitted by applicable laws, statutes, ordinances, codes, rules and regulations, lawful orders of public authorities, and the Contract Documents and shall not unreasonably encumber the site with materials or equipment.

§ 3.14 Cutting and Patching

§ 3.14.1 The Contractor shall be responsible for cutting, fitting, or patching required to complete the Work or to make its parts fit together properly. All areas requiring cutting, fitting, or patching shall be restored to the condition existing prior to the cutting, fitting, or patching, unless otherwise required by the Contract Documents.

§ 3.14.2 The Contractor shall not damage or endanger a portion of the Work or fully or partially completed construction of the Owner or Separate Contractors by cutting, patching, or otherwise altering such construction, or by excavation. The Contractor shall not cut or otherwise alter construction by the Owner or a Separate Contractor except with written consent of the Owner and of the Separate Contractor. Consent shall not be unreasonably withheld. The Contractor shall not unreasonably withhold, from the Owner or a Separate Contractor, its consent to cutting or otherwise altering the Work.

§ 3.15 Cleaning Up

§ 3.15.1 The Contractor shall keep the premises and surrounding area free from accumulation of waste materials and rubbish caused by operations under the Contract. At completion of the Work, the Contractor shall remove waste materials, rubbish, the Contractor's tools, construction equipment, machinery, and surplus materials from and about the Project.

§ 3.15.2 If the Contractor fails to clean up as provided in the Contract Documents, the Owner may do so and the Owner shall be entitled to reimbursement from the Contractor.

§ 3.16 Access to Work

The Contractor shall provide the Owner and Architect with access to the Work in preparation and progress wherever located.

§ 3.17 Royalties, Patents and Copyrights

The Contractor shall pay all royalties and license fees. The Contractor shall defend suits or claims for infringement of copyrights and patent rights and shall hold the Owner and Architect harmless from loss on account thereof, but shall not be responsible for defense or loss when a particular design, process, or product of a particular manufacturer or manufacturers is required by the Contract Documents, or where the copyright violations are contained in Drawings, Specifications, or other documents prepared by the Owner or Architect. However, if an infringement of a copyright or patent is discovered by, or made known to, the Contractor, the Contractor shall be responsible for the loss unless the information is promptly furnished to the Architect.

§ 3.18 Indemnification

§ 3.18.1 To the fullest extent permitted by law, the Contractor shall indemnify and hold harmless the Owner, Architect, Architect's consultants, and agents and employees of any of them from and against claims, damages, losses, and expenses, including but not limited to attorneys' fees, arising out of or resulting from performance of the Work, provided that such claim, damage, loss, or expense is attributable to bodily injury, sickness, disease or death, or to injury to or destruction of tangible property (other than the Work itself), but only to the extent caused by the negligent acts or omissions of the Contractor, a Subcontractor, anyone directly or indirectly employed by them, or anyone for whose acts they may be liable, regardless of whether or not such claim, damage, loss, or expense is caused in part by a party indemnified hereunder. Such obligation shall not be construed to negate, abridge, or reduce other rights or obligations of indemnity that would otherwise exist as to a party or person described in this Section 3.18.

§ 3.18.2 In claims against any person or entity indemnified under this Section 3.18 by an employee of the Contractor, a Subcontractor, anyone directly or indirectly employed by them, or anyone for whose acts they may be liable, the indemnification obligation under Section 3.18.1 shall not be limited by a limitation on amount or type of damages, compensation, or benefits payable by or for the Contractor or a Subcontractor under workers' compensation acts, disability benefit acts, or other employee benefit acts.

AIA Document A201™ – 2017. Copyright © 1911, 1915, 1918, 1925, 1937, 1951, 1958, 1961, 1963, 1966, 1970, 1976, 1987, 1997, 2007 and 2017 by The American Institute of Architects. **All rights reserved. WARNING: This AIA® Document is protected by U.S. Copyright Law and International Treaties. Unauthorized reproduction or distribution of this AIA® Document, or any portion of it, may result in severe civil and criminal penalties, and will be prosecuted to the maximum extent possible under the law.** To report copyright violations of AIA Contract Documents, e-mail The American Institute of Architects' legal counsel, copyright@aia.org.

ARTICLE 4 ARCHITECT

§ 4.1 General

§ 4.1.1 The Architect is the person or entity retained by the Owner pursuant to Section 2.3.2 and identified as such in the Agreement.

§ 4.1.2 Duties, responsibilities, and limitations of authority of the Architect as set forth in the Contract Documents shall not be restricted, modified, or extended without written consent of the Owner, Contractor, and Architect. Consent shall not be unreasonably withheld.

§ 4.2 Administration of the Contract

§ 4.2.1 The Architect will provide administration of the Contract as described in the Contract Documents and will be an Owner's representative during construction until the date the Architect issues the final Certificate for Payment. The Architect will have authority to act on behalf of the Owner only to the extent provided in the Contract Documents.

§ 4.2.2 The Architect will visit the site at intervals appropriate to the stage of construction, or as otherwise agreed with the Owner, to become generally familiar with the progress and quality of the portion of the Work completed, and to determine in general if the Work observed is being performed in a manner indicating that the Work, when fully completed, will be in accordance with the Contract Documents. However, the Architect will not be required to make exhaustive or continuous on-site inspections to check the quality or quantity of the Work. The Architect will not have control over, charge of, or responsibility for the construction means, methods, techniques, sequences or procedures, or for the safety precautions and programs in connection with the Work, since these are solely the Contractor's rights and responsibilities under the Contract Documents.

§ 4.2.3 On the basis of the site visits, the Architect will keep the Owner reasonably informed about the progress and quality of the portion of the Work completed, and promptly report to the Owner (1) known deviations from the Contract Documents, (2) known deviations from the most recent construction schedule submitted by the Contractor, and (3) defects and deficiencies observed in the Work. The Architect will not be responsible for the Contractor's failure to perform the Work in accordance with the requirements of the Contract Documents. The Architect will not have control over or charge of, and will not be responsible for acts or omissions of, the Contractor, Subcontractors, or their agents or employees, or any other persons or entities performing portions of the Work.

§ 4.2.4 Communications

The Owner and Contractor shall include the Architect in all communications that relate to or affect the Architect's services or professional responsibilities. The Owner shall promptly notify the Architect of the substance of any direct communications between the Owner and the Contractor otherwise relating to the Project. Communications by and with the Architect's consultants shall be through the Architect. Communications by and with Subcontractors and suppliers shall be through the Contractor. Communications by and with Separate Contractors shall be through the Owner. The Contract Documents may specify other communication protocols.

§ 4.2.5 Based on the Architect's evaluations of the Contractor's Applications for Payment, the Architect will review and certify the amounts due the Contractor and will issue Certificates for Payment in such amounts.

§ 4.2.6 The Architect has authority to reject Work that does not conform to the Contract Documents. Whenever the Architect considers it necessary or advisable, the Architect will have authority to require inspection or testing of the Work in accordance with Sections 13.4.2 and 13.4.3, whether or not the Work is fabricated, installed or completed. However, neither this authority of the Architect nor a decision made in good faith either to exercise or not to exercise such authority shall give rise to a duty or responsibility of the Architect to the Contractor, Subcontractors, suppliers, their agents or employees, or other persons or entities performing portions of the Work.

§ 4.2.7 The Architect will review and approve, or take other appropriate action upon, the Contractor's submittals such as Shop Drawings, Product Data, and Samples, but only for the limited purpose of checking for conformance with information given and the design concept expressed in the Contract Documents. The Architect's action will be taken in accordance with the submittal schedule approved by the Architect or, in the absence of an approved submittal schedule, with reasonable promptness while allowing sufficient time in the Architect's professional judgment to permit adequate review. Review of such submittals is not conducted for the purpose of determining the accuracy and completeness of other details such as dimensions and quantities, or for substantiating instructions for installation or performance of equipment or systems, all of which remain the responsibility of the Contractor as required by the Contract Documents. The Architect's review of the Contractor's submittals shall not relieve the Contractor of the obligations under

AIA Document A201™ – 2017. Copyright © 1911, 1915, 1918, 1925, 1937, 1951, 1958, 1961, 1963, 1966, 1970, 1976, 1987, 1997, 2007 and 2017 by The American Institute of Architects. All rights reserved. WARNING: This AIA® Document is protected by U.S. Copyright Law and International Treaties. Unauthorized reproduction or distribution of this AIA® Document, or any portion of it, may result in severe civil and criminal penalties, and will be prosecuted to the maximum extent possible under the law. To report copyright violations of AIA Contract Documents, e-mail The American Institute of Architects' legal counsel, copyright@aia.org.

Sections 3.3, 3.5, and 3.12. The Architect's review shall not constitute approval of safety precautions or of any construction means, methods, techniques, sequences, or procedures. The Architect's approval of a specific item shall not indicate approval of an assembly of which the item is a component.

§ 4.2.8 The Architect will prepare Change Orders and Construction Change Directives, and may order minor changes in the Work as provided in Section 7.4. The Architect will investigate and make determinations and recommendations regarding concealed and unknown conditions as provided in Section 3.7.4.

§ 4.2.9 The Architect will conduct inspections to determine the date or dates of Substantial Completion and the date of final completion; issue Certificates of Substantial Completion pursuant to Section 9.8; receive and forward to the Owner, for the Owner's review and records, written warranties and related documents required by the Contract and assembled by the Contractor pursuant to Section 9.10; and issue a final Certificate for Payment pursuant to Section 9.10.

§ 4.2.10 If the Owner and Architect agree, the Architect will provide one or more Project representatives to assist in carrying out the Architect's responsibilities at the site. The Owner shall notify the Contractor of any change in the duties, responsibilities and limitations of authority of the Project representatives.

§ 4.2.11 The Architect will interpret and decide matters concerning performance under, and requirements of, the Contract Documents on written request of either the Owner or Contractor. The Architect's response to such requests will be made in writing within any time limits agreed upon or otherwise with reasonable promptness.

§ 4.2.12 Interpretations and decisions of the Architect will be consistent with the intent of, and reasonably inferable from, the Contract Documents and will be in writing or in the form of drawings. When making such interpretations and decisions, the Architect will endeavor to secure faithful performance by both Owner and Contractor, will not show partiality to either, and will not be liable for results of interpretations or decisions rendered in good faith.

§ 4.2.13 The Architect's decisions on matters relating to aesthetic effect will be final if consistent with the intent expressed in the Contract Documents.

§ 4.2.14 The Architect will review and respond to requests for information about the Contract Documents. The Architect's response to such requests will be made in writing within any time limits agreed upon or otherwise with reasonable promptness. If appropriate, the Architect will prepare and issue supplemental Drawings and Specifications in response to the requests for information.

ARTICLE 5 SUBCONTRACTORS

§ 5.1 Definitions

§ 5.1.1 A Subcontractor is a person or entity who has a direct contract with the Contractor to perform a portion of the Work at the site. The term "Subcontractor" is referred to throughout the Contract Documents as if singular in number and means a Subcontractor or an authorized representative of the Subcontractor. The term "Subcontractor" does not include a Separate Contractor or the subcontractors of a Separate Contractor.

§ 5.1.2 A Sub-subcontractor is a person or entity who has a direct or indirect contract with a Subcontractor to perform a portion of the Work at the site. The term "Sub-subcontractor" is referred to throughout the Contract Documents as if singular in number and means a Sub-subcontractor or an authorized representative of the Sub-subcontractor.

§ 5.2 Award of Subcontracts and Other Contracts for Portions of the Work

§ 5.2.1 Unless otherwise stated in the Contract Documents, the Contractor, as soon as practicable after award of the Contract, shall notify the Owner and Architect of the persons or entities proposed for each principal portion of the Work, including those who are to furnish materials or equipment fabricated to a special design. Within 14 days of receipt of the information, the Architect may notify the Contractor whether the Owner or the Architect (1) has reasonable objection to any such proposed person or entity or (2) requires additional time for review. Failure of the Architect to provide notice within the 14-day period shall constitute notice of no reasonable objection.

§ 5.2.2 The Contractor shall not contract with a proposed person or entity to whom the Owner or Architect has made reasonable and timely objection. The Contractor shall not be required to contract with anyone to whom the Contractor has made reasonable objection.

§ 5.2.3 If the Owner or Architect has reasonable objection to a person or entity proposed by the Contractor, the

AIA Document A201™ – 2017. Copyright © 1911, 1915, 1918, 1925, 1937, 1951, 1958, 1961, 1963, 1966, 1970, 1976, 1987, 1997, 2007 and 2017 by The American Institute of Architects. All rights reserved. WARNING: This AIA® Document is protected by U.S. Copyright Law and International Treaties. Unauthorized reproduction or distribution of this AIA® Document, or any portion of it, may result in severe civil and criminal penalties, and will be prosecuted to the maximum extent possible under the law. To report copyright violations of AIA Contract Documents, e-mail The American Institute of Architects' legal counsel, copyright@aia.org.

Contractor shall propose another to whom the Owner or Architect has no reasonable objection. If the proposed but rejected Subcontractor was reasonably capable of performing the Work, the Contract Sum and Contract Time shall be increased or decreased by the difference, if any, occasioned by such change, and an appropriate Change Order shall be issued before commencement of the substitute Subcontractor's Work. However, no increase in the Contract Sum or Contract Time shall be allowed for such change unless the Contractor has acted promptly and responsively in submitting names as required.

§ 5.2.4 The Contractor shall not substitute a Subcontractor, person, or entity for one previously selected if the Owner or Architect makes reasonable objection to such substitution.

§ 5.3 Subcontractual Relations

By appropriate written agreement, the Contractor shall require each Subcontractor, to the extent of the Work to be performed by the Subcontractor, to be bound to the Contractor by terms of the Contract Documents, and to assume toward the Contractor all the obligations and responsibilities, including the responsibility for safety of the Subcontractor's Work that the Contractor, by these Contract Documents, assumes toward the Owner and Architect. Each subcontract agreement shall preserve and protect the rights of the Owner and Architect under the Contract Documents with respect to the Work to be performed by the Subcontractor so that subcontracting thereof will not prejudice such rights, and shall allow to the Subcontractor, unless specifically provided otherwise in the subcontract agreement, the benefit of all rights, remedies, and redress against the Contractor that the Contractor, by the Contract Documents, has against the Owner. Where appropriate, the Contractor shall require each Subcontractor to enter into similar agreements with Sub-subcontractors. The Contractor shall make available to each proposed Subcontractor, prior to the execution of the subcontract agreement, copies of the Contract Documents to which the Subcontractor will be bound, and, upon written request of the Subcontractor, identify to the Subcontractor terms and conditions of the proposed subcontract agreement that may be at variance with the Contract Documents. Subcontractors will similarly make copies of applicable portions of such documents available to their respective proposed Sub-subcontractors.

§ 5.4 Contingent Assignment of Subcontracts

§ 5.4.1 Each subcontract agreement for a portion of the Work is assigned by the Contractor to the Owner, provided that

- **.1** assignment is effective only after termination of the Contract by the Owner for cause pursuant to Section 14.2 and only for those subcontract agreements that the Owner accepts by notifying the Subcontractor and Contractor; and
- **.2** assignment is subject to the prior rights of the surety, if any, obligated under bond relating to the Contract.

When the Owner accepts the assignment of a subcontract agreement, the Owner assumes the Contractor's rights and obligations under the subcontract.

§ 5.4.2 Upon such assignment, if the Work has been suspended for more than 30 days, the Subcontractor's compensation shall be equitably adjusted for increases in cost resulting from the suspension.

§ 5.4.3 Upon assignment to the Owner under this Section 5.4, the Owner may further assign the subcontract to a successor contractor or other entity. If the Owner assigns the subcontract to a successor contractor or other entity, the Owner shall nevertheless remain legally responsible for all of the successor contractor's obligations under the subcontract.

ARTICLE 6 CONSTRUCTION BY OWNER OR BY SEPARATE CONTRACTORS

§ 6.1 Owner's Right to Perform Construction and to Award Separate Contracts

§ 6.1.1 The term "Separate Contractor(s)" shall mean other contractors retained by the Owner under separate agreements. The Owner reserves the right to perform construction or operations related to the Project with the Owner's own forces, and with Separate Contractors retained under Conditions of the Contract substantially similar to those of this Contract, including those provisions of the Conditions of the Contract related to insurance and waiver of subrogation.

§ 6.1.2 When separate contracts are awarded for different portions of the Project or other construction or operations on the site, the term "Contractor" in the Contract Documents in each case shall mean the Contractor who executes each separate Owner-Contractor Agreement.

§ 6.1.3 The Owner shall provide for coordination of the activities of the Owner's own forces and of each Separate

AIA Document A201™ – 2017. Copyright © 1911, 1915, 1918, 1925, 1937, 1951, 1958, 1961, 1963, 1966, 1970, 1976, 1987, 1997, 2007 and 2017 by The American Institute of Architects. **All rights reserved.** WARNING: This AIA® Document is protected by U.S. Copyright Law and International Treaties. Unauthorized reproduction or distribution of this AIA® Document, or any portion of it, may result in severe civil and criminal penalties, and will be prosecuted to the maximum extent possible under the law. To report copyright violations of AIA Contract Documents, e-mail The American Institute of Architects' legal counsel, copyright@aia.org.

Contractor with the Work of the Contractor, who shall cooperate with them. The Contractor shall participate with any Separate Contractors and the Owner in reviewing their construction schedules. The Contractor shall make any revisions to its construction schedule deemed necessary after a joint review and mutual agreement. The construction schedules shall then constitute the schedules to be used by the Contractor, Separate Contractors, and the Owner until subsequently revised.

§ 6.1.4 Unless otherwise provided in the Contract Documents, when the Owner performs construction or operations related to the Project with the Owner's own forces or with Separate Contractors, the Owner or its Separate Contractors shall have the same obligations and rights that the Contractor has under the Conditions of the Contract, including, without excluding others, those stated in Article 3, this Article 6, and Articles 10, 11, and 12.

§ 6.2 Mutual Responsibility

§ 6.2.1 The Contractor shall afford the Owner and Separate Contractors reasonable opportunity for introduction and storage of their materials and equipment and performance of their activities, and shall connect and coordinate the Contractor's construction and operations with theirs as required by the Contract Documents.

§ 6.2.2 If part of the Contractor's Work depends for proper execution or results upon construction or operations by the Owner or a Separate Contractor, the Contractor shall, prior to proceeding with that portion of the Work, promptly notify the Architect of apparent discrepancies or defects in the construction or operations by the Owner or Separate Contractor that would render it unsuitable for proper execution and results of the Contractor's Work. Failure of the Contractor to notify the Architect of apparent discrepancies or defects prior to proceeding with the Work shall constitute an acknowledgment that the Owner's or Separate Contractor's completed or partially completed construction is fit and proper to receive the Contractor's Work. The Contractor shall not be responsible for discrepancies or defects in the construction or operations by the Owner or Separate Contractor that are not apparent.

§ 6.2.3 The Contractor shall reimburse the Owner for costs the Owner incurs that are payable to a Separate Contractor because of the Contractor's delays, improperly timed activities or defective construction. The Owner shall be responsible to the Contractor for costs the Contractor incurs because of a Separate Contractor's delays, improperly timed activities, damage to the Work or defective construction.

§ 6.2.4 The Contractor shall promptly remedy damage that the Contractor wrongfully causes to completed or partially completed construction or to property of the Owner or Separate Contractor as provided in Section 10.2.5.

§ 6.2.5 The Owner and each Separate Contractor shall have the same responsibilities for cutting and patching as are described for the Contractor in Section 3.14.

§ 6.3 Owner's Right to Clean Up

If a dispute arises among the Contractor, Separate Contractors, and the Owner as to the responsibility under their respective contracts for maintaining the premises and surrounding area free from waste materials and rubbish, the Owner may clean up and the Architect will allocate the cost among those responsible.

ARTICLE 7 CHANGES IN THE WORK

§ 7.1 General

§ 7.1.1 Changes in the Work may be accomplished after execution of the Contract, and without invalidating the Contract, by Change Order, Construction Change Directive or order for a minor change in the Work, subject to the limitations stated in this Article 7 and elsewhere in the Contract Documents.

§ 7.1.2 A Change Order shall be based upon agreement among the Owner, Contractor, and Architect. A Construction Change Directive requires agreement by the Owner and Architect and may or may not be agreed to by the Contractor. An order for a minor change in the Work may be issued by the Architect alone.

§ 7.1.3 Changes in the Work shall be performed under applicable provisions of the Contract Documents. The Contractor shall proceed promptly with changes in the Work, unless otherwise provided in the Change Order, Construction Change Directive, or order for a minor change in the Work.

§ 7.2 Change Orders

§ 7.2.1 A Change Order is a written instrument prepared by the Architect and signed by the Owner, Contractor, and Architect stating their agreement upon all of the following:

AIA Document A201™ – 2017. Copyright © 1911, 1915, 1918, 1925, 1937, 1951, 1958, 1961, 1963, 1966, 1970, 1976, 1987, 1997, 2007 and 2017 by The American Institute of Architects. **All rights reserved. WARNING: This AIA® Document is protected by U.S. Copyright Law and International Treaties. Unauthorized reproduction or distribution of this AIA® Document, or any portion of it, may result in severe civil and criminal penalties, and will be prosecuted to the maximum extent possible under the law.** To report copyright violations of AIA Contract Documents, e-mail The American Institute of Architects' legal counsel, copyright@aia.org.

.1 The change in the Work;
.2 The amount of the adjustment, if any, in the Contract Sum; and
.3 The extent of the adjustment, if any, in the Contract Time.

§ 7.3 Construction Change Directives

§ 7.3.1 A Construction Change Directive is a written order prepared by the Architect and signed by the Owner and Architect, directing a change in the Work prior to agreement on adjustment, if any, in the Contract Sum or Contract Time, or both. The Owner may by Construction Change Directive, without invalidating the Contract, order changes in the Work within the general scope of the Contract consisting of additions, deletions, or other revisions, the Contract Sum and Contract Time being adjusted accordingly.

§ 7.3.2 A Construction Change Directive shall be used in the absence of total agreement on the terms of a Change Order.

§ 7.3.3 If the Construction Change Directive provides for an adjustment to the Contract Sum, the adjustment shall be based on one of the following methods:

.1 Mutual acceptance of a lump sum properly itemized and supported by sufficient substantiating data to permit evaluation;
.2 Unit prices stated in the Contract Documents or subsequently agreed upon;
.3 Cost to be determined in a manner agreed upon by the parties and a mutually acceptable fixed or percentage fee; or
.4 As provided in Section 7.3.4.

§ 7.3.4 If the Contractor does not respond promptly or disagrees with the method for adjustment in the Contract Sum, the Architect shall determine the adjustment on the basis of reasonable expenditures and savings of those performing the Work attributable to the change, including, in case of an increase in the Contract Sum, an amount for overhead and profit as set forth in the Agreement, or if no such amount is set forth in the Agreement, a reasonable amount. In such case, and also under Section 7.3.3.3, the Contractor shall keep and present, in such form as the Architect may prescribe, an itemized accounting together with appropriate supporting data. Unless otherwise provided in the Contract Documents, costs for the purposes of this Section 7.3.4 shall be limited to the following:

.1 Costs of labor, including applicable payroll taxes, fringe benefits required by agreement or custom, workers' compensation insurance, and other employee costs approved by the Architect;
.2 Costs of materials, supplies, and equipment, including cost of transportation, whether incorporated or consumed;
.3 Rental costs of machinery and equipment, exclusive of hand tools, whether rented from the Contractor or others;
.4 Costs of premiums for all bonds and insurance, permit fees, and sales, use, or similar taxes, directly related to the change; and
.5 Costs of supervision and field office personnel directly attributable to the change.

§ 7.3.5 If the Contractor disagrees with the adjustment in the Contract Time, the Contractor may make a Claim in accordance with applicable provisions of Article 15.

§ 7.3.6 Upon receipt of a Construction Change Directive, the Contractor shall promptly proceed with the change in the Work involved and advise the Architect of the Contractor's agreement or disagreement with the method, if any, provided in the Construction Change Directive for determining the proposed adjustment in the Contract Sum or Contract Time.

§ 7.3.7 A Construction Change Directive signed by the Contractor indicates the Contractor's agreement therewith, including adjustment in Contract Sum and Contract Time or the method for determining them. Such agreement shall be effective immediately and shall be recorded as a Change Order.

§ 7.3.8 The amount of credit to be allowed by the Contractor to the Owner for a deletion or change that results in a net decrease in the Contract Sum shall be actual net cost as confirmed by the Architect. When both additions and credits covering related Work or substitutions are involved in a change, the allowance for overhead and profit shall be figured on the basis of net increase, if any, with respect to that change.

§ 7.3.9 Pending final determination of the total cost of a Construction Change Directive to the Owner, the Contractor may request payment for Work completed under the Construction Change Directive in Applications for Payment. The

AIA Document A201™ – 2017. Copyright © 1911, 1915, 1918, 1925, 1937, 1951, 1958, 1961, 1963, 1966, 1970, 1976, 1987, 1997, 2007 and 2017 by The American Institute of Architects. All rights reserved. WARNING: This AIA® Document is protected by U.S. Copyright Law and International Treaties. Unauthorized reproduction or distribution of this AIA® Document, or any portion of it, may result in severe civil and criminal penalties, and will be prosecuted to the maximum extent possible under the law. To report copyright violations of AIA Contract Documents, e-mail The American Institute of Architects' legal counsel, copyright@aia.org.

Architect will make an interim determination for purposes of monthly certification for payment for those costs and certify for payment the amount that the Architect determines, in the Architect's professional judgment, to be reasonably justified. The Architect's interim determination of cost shall adjust the Contract Sum on the same basis as a Change Order, subject to the right of either party to disagree and assert a Claim in accordance with Article 15.

§ 7.3.10 When the Owner and Contractor agree with a determination made by the Architect concerning the adjustments in the Contract Sum and Contract Time, or otherwise reach agreement upon the adjustments, such agreement shall be effective immediately and the Architect will prepare a Change Order. Change Orders may be issued for all or any part of a Construction Change Directive.

§ 7.4 Minor Changes in the Work

The Architect may order minor changes in the Work that are consistent with the intent of the Contract Documents and do not involve an adjustment in the Contract Sum or an extension of the Contract Time. The Architect's order for minor changes shall be in writing. If the Contractor believes that the proposed minor change in the Work will affect the Contract Sum or Contract Time, the Contractor shall notify the Architect and shall not proceed to implement the change in the Work. If the Contractor performs the Work set forth in the Architect's order for a minor change without prior notice to the Architect that such change will affect the Contract Sum or Contract Time, the Contractor waives any adjustment to the Contract Sum or extension of the Contract Time.

ARTICLE 8 TIME

§ 8.1 Definitions

§ 8.1.1 Unless otherwise provided, Contract Time is the period of time, including authorized adjustments, allotted in the Contract Documents for Substantial Completion of the Work.

§ 8.1.2 The date of commencement of the Work is the date established in the Agreement.

§ 8.1.3 The date of Substantial Completion is the date certified by the Architect in accordance with Section 9.8.

§ 8.1.4 The term "day" as used in the Contract Documents shall mean calendar day unless otherwise specifically defined.

§ 8.2 Progress and Completion

§ 8.2.1 Time limits stated in the Contract Documents are of the essence of the Contract. By executing the Agreement, the Contractor confirms that the Contract Time is a reasonable period for performing the Work.

§ 8.2.2 The Contractor shall not knowingly, except by agreement or instruction of the Owner in writing, commence the Work prior to the effective date of insurance required to be furnished by the Contractor and Owner.

§ 8.2.3 The Contractor shall proceed expeditiously with adequate forces and shall achieve Substantial Completion within the Contract Time.

§ 8.3 Delays and Extensions of Time

§ 8.3.1 If the Contractor is delayed at any time in the commencement or progress of the Work by (1) an act or neglect of the Owner or Architect, of an employee of either, or of a Separate Contractor; (2) by changes ordered in the Work; (3) by labor disputes, fire, unusual delay in deliveries, unavoidable casualties, adverse weather conditions documented in accordance with Section 15.1.6.2, or other causes beyond the Contractor's control; (4) by delay authorized by the Owner pending mediation and binding dispute resolution; or (5) by other causes that the Contractor asserts, and the Architect determines, justify delay, then the Contract Time shall be extended for such reasonable time as the Architect may determine.

§ 8.3.2 Claims relating to time shall be made in accordance with applicable provisions of Article 15.

§ 8.3.3 This Section 8.3 does not preclude recovery of damages for delay by either party under other provisions of the Contract Documents.

ARTICLE 9 PAYMENTS AND COMPLETION

§ 9.1 Contract Sum

§ 9.1.1 The Contract Sum is stated in the Agreement and, including authorized adjustments, is the total amount payable

Init.
/
AIA Document A201™ – 2017. Copyright © 1911, 1915, 1918, 1925, 1937, 1951, 1958, 1961, 1963, 1966, 1970, 1976, 1987, 1997, 2007 and 2017 by The American Institute of Architects. All rights reserved. WARNING: This AIA® Document is protected by U.S. Copyright Law and International Treaties. Unauthorized reproduction or distribution of this AIA® Document, or any portion of it, may result in severe civil and criminal penalties, and will be prosecuted to the maximum extent possible under the law. To report copyright violations of AIA Contract Documents, e-mail The American Institute of Architects' legal counsel, copyright@aia.org.

by the Owner to the Contractor for performance of the Work under the Contract Documents.

§ 9.1.2 If unit prices are stated in the Contract Documents or subsequently agreed upon, and if quantities originally contemplated are materially changed so that application of such unit prices to the actual quantities causes substantial inequity to the Owner or Contractor, the applicable unit prices shall be equitably adjusted.

§ 9.2 Schedule of Values

Where the Contract is based on a stipulated sum or Guaranteed Maximum Price, the Contractor shall submit a schedule of values to the Architect before the first Application for Payment, allocating the entire Contract Sum to the various portions of the Work. The schedule of values shall be prepared in the form, and supported by the data to substantiate its accuracy, required by the Architect. This schedule, unless objected to by the Architect, shall be used as a basis for reviewing the Contractor's Applications for Payment. Any changes to the schedule of values shall be submitted to the Architect and supported by such data to substantiate its accuracy as the Architect may require, and unless objected to by the Architect, shall be used as a basis for reviewing the Contractor's subsequent Applications for Payment.

§ 9.3 Applications for Payment

§ 9.3.1 At least ten days before the date established for each progress payment, the Contractor shall submit to the Architect an itemized Application for Payment prepared in accordance with the schedule of values, if required under Section 9.2, for completed portions of the Work. The application shall be notarized, if required, and supported by all data substantiating the Contractor's right to payment that the Owner or Architect require, such as copies of requisitions, and releases and waivers of liens from Subcontractors and suppliers, and shall reflect retainage if provided for in the Contract Documents.

§ 9.3.1.1 As provided in Section 7.3.9, such applications may include requests for payment on account of changes in the Work that have been properly authorized by Construction Change Directives, or by interim determinations of the Architect, but not yet included in Change Orders.

§ 9.3.1.2 Applications for Payment shall not include requests for payment for portions of the Work for which the Contractor does not intend to pay a Subcontractor or supplier, unless such Work has been performed by others whom the Contractor intends to pay.

§ 9.3.2 Unless otherwise provided in the Contract Documents, payments shall be made on account of materials and equipment delivered and suitably stored at the site for subsequent incorporation in the Work. If approved in advance by the Owner, payment may similarly be made for materials and equipment suitably stored off the site at a location agreed upon in writing. Payment for materials and equipment stored on or off the site shall be conditioned upon compliance by the Contractor with procedures satisfactory to the Owner to establish the Owner's title to such materials and equipment or otherwise protect the Owner's interest, and shall include the costs of applicable insurance, storage, and transportation to the site, for such materials and equipment stored off the site.

§ 9.3.3 The Contractor warrants that title to all Work covered by an Application for Payment will pass to the Owner no later than the time of payment. The Contractor further warrants that upon submittal of an Application for Payment all Work for which Certificates for Payment have been previously issued and payments received from the Owner shall, to the best of the Contractor's knowledge, information, and belief, be free and clear of liens, claims, security interests, or encumbrances, in favor of the Contractor, Subcontractors, suppliers, or other persons or entities that provided labor, materials, and equipment relating to the Work.

§ 9.4 Certificates for Payment

§ 9.4.1 The Architect will, within seven days after receipt of the Contractor's Application for Payment, either (1) issue to the Owner a Certificate for Payment in the full amount of the Application for Payment, with a copy to the Contractor; or (2) issue to the Owner a Certificate for Payment for such amount as the Architect determines is properly due, and notify the Contractor and Owner of the Architect's reasons for withholding certification in part as provided in Section 9.5.1; or (3) withhold certification of the entire Application for Payment, and notify the Contractor and Owner of the Architect's reason for withholding certification in whole as provided in Section 9.5.1.

§ 9.4.2 The issuance of a Certificate for Payment will constitute a representation by the Architect to the Owner, based on the Architect's evaluation of the Work and the data in the Application for Payment, that, to the best of the Architect's knowledge, information, and belief, the Work has progressed to the point indicated, the quality of the Work is in accordance with the Contract Documents, and that the Contractor is entitled to payment in the amount certified. The

AIA Document A201™ – 2017. Copyright © 1911, 1915, 1918, 1925, 1937, 1951, 1958, 1961, 1963, 1966, 1970, 1976, 1987, 1997, 2007 and 2017 by The American Institute of Architects. All rights reserved. WARNING: This AIA® Document is protected by U.S. Copyright Law and International Treaties. Unauthorized reproduction or distribution of this AIA® Document, or any portion of it, may result in severe civil and criminal penalties, and will be prosecuted to the maximum extent possible under the law. To report copyright violations of AIA Contract Documents, e-mail The American Institute of Architects' legal counsel, copyright@aia.org.

foregoing representations are subject to an evaluation of the Work for conformance with the Contract Documents upon Substantial Completion, to results of subsequent tests and inspections, to correction of minor deviations from the Contract Documents prior to completion, and to specific qualifications expressed by the Architect. However, the issuance of a Certificate for Payment will not be a representation that the Architect has (1) made exhaustive or continuous on-site inspections to check the quality or quantity of the Work; (2) reviewed construction means, methods, techniques, sequences, or procedures; (3) reviewed copies of requisitions received from Subcontractors and suppliers and other data requested by the Owner to substantiate the Contractor's right to payment; or (4) made examination to ascertain how or for what purpose the Contractor has used money previously paid on account of the Contract Sum.

§ 9.5 Decisions to Withhold Certification

§ 9.5.1 The Architect may withhold a Certificate for Payment in whole or in part, to the extent reasonably necessary to protect the Owner, if in the Architect's opinion the representations to the Owner required by Section 9.4.2 cannot be made. If the Architect is unable to certify payment in the amount of the Application, the Architect will notify the Contractor and Owner as provided in Section 9.4.1. If the Contractor and Architect cannot agree on a revised amount, the Architect will promptly issue a Certificate for Payment for the amount for which the Architect is able to make such representations to the Owner. The Architect may also withhold a Certificate for Payment or, because of subsequently discovered evidence, may nullify the whole or a part of a Certificate for Payment previously issued, to such extent as may be necessary in the Architect's opinion to protect the Owner from loss for which the Contractor is responsible, including loss resulting from acts and omissions described in Section 3.3.2, because of

- .1 defective Work not remedied;
- .2 third party claims filed or reasonable evidence indicating probable filing of such claims, unless security acceptable to the Owner is provided by the Contractor;
- .3 failure of the Contractor to make payments properly to Subcontractors or suppliers for labor, materials or equipment;
- .4 reasonable evidence that the Work cannot be completed for the unpaid balance of the Contract Sum;
- .5 damage to the Owner or a Separate Contractor;
- .6 reasonable evidence that the Work will not be completed within the Contract Time, and that the unpaid balance would not be adequate to cover actual or liquidated damages for the anticipated delay; or
- .7 repeated failure to carry out the Work in accordance with the Contract Documents.

§ 9.5.2 When either party disputes the Architect's decision regarding a Certificate for Payment under Section 9.5.1, in whole or in part, that party may submit a Claim in accordance with Article 15.

§ 9.5.3 When the reasons for withholding certification are removed, certification will be made for amounts previously withheld.

§ 9.5.4 If the Architect withholds certification for payment under Section 9.5.1.3, the Owner may, at its sole option, issue joint checks to the Contractor and to any Subcontractor or supplier to whom the Contractor failed to make payment for Work properly performed or material or equipment suitably delivered. If the Owner makes payments by joint check, the Owner shall notify the Architect and the Contractor shall reflect such payment on its next Application for Payment.

§ 9.6 Progress Payments

§ 9.6.1 After the Architect has issued a Certificate for Payment, the Owner shall make payment in the manner and within the time provided in the Contract Documents, and shall so notify the Architect.

§ 9.6.2 The Contractor shall pay each Subcontractor, no later than seven days after receipt of payment from the Owner, the amount to which the Subcontractor is entitled, reflecting percentages actually retained from payments to the Contractor on account of the Subcontractor's portion of the Work. The Contractor shall, by appropriate agreement with each Subcontractor, require each Subcontractor to make payments to Sub-subcontractors in a similar manner.

§ 9.6.3 The Architect will, on request, furnish to a Subcontractor, if practicable, information regarding percentages of completion or amounts applied for by the Contractor and action taken thereon by the Architect and Owner on account of portions of the Work done by such Subcontractor.

§ 9.6.4 The Owner has the right to request written evidence from the Contractor that the Contractor has properly paid Subcontractors and suppliers amounts paid by the Owner to the Contractor for subcontracted Work. If the Contractor fails to furnish such evidence within seven days, the Owner shall have the right to contact Subcontractors and suppliers

AIA Document A201™ – 2017. Copyright © 1911, 1915, 1918, 1925, 1937, 1951, 1958, 1961, 1963, 1966, 1970, 1976, 1987, 1997, 2007 and 2017 by The American Institute of Architects. All rights reserved. WARNING: This AIA® Document is protected by U.S. Copyright Law and International Treaties. Unauthorized reproduction or distribution of this AIA® Document, or any portion of it, may result in severe civil and criminal penalties, and will be prosecuted to the maximum extent possible under the law. To report copyright violations of AIA Contract Documents, e-mail The American Institute of Architects' legal counsel, copyright@aia.org.

to ascertain whether they have been properly paid. Neither the Owner nor Architect shall have an obligation to pay, or to see to the payment of money to, a Subcontractor or supplier, except as may otherwise be required by law.

§ 9.6.5 The Contractor's payments to suppliers shall be treated in a manner similar to that provided in Sections 9.6.2, 9.6.3 and 9.6.4.

§ 9.6.6 A Certificate for Payment, a progress payment, or partial or entire use or occupancy of the Project by the Owner shall not constitute acceptance of Work not in accordance with the Contract Documents.

§ 9.6.7 Unless the Contractor provides the Owner with a payment bond in the full penal sum of the Contract Sum, payments received by the Contractor for Work properly performed by Subcontractors or provided by suppliers shall be held by the Contractor for those Subcontractors or suppliers who performed Work or furnished materials, or both, under contract with the Contractor for which payment was made by the Owner. Nothing contained herein shall require money to be placed in a separate account and not commingled with money of the Contractor, create any fiduciary liability or tort liability on the part of the Contractor for breach of trust, or entitle any person or entity to an award of punitive damages against the Contractor for breach of the requirements of this provision.

§ 9.6.8 Provided the Owner has fulfilled its payment obligations under the Contract Documents, the Contractor shall defend and indemnify the Owner from all loss, liability, damage or expense, including reasonable attorney's fees and litigation expenses, arising out of any lien claim or other claim for payment by any Subcontractor or supplier of any tier. Upon receipt of notice of a lien claim or other claim for payment, the Owner shall notify the Contractor. If approved by the applicable court, when required, the Contractor may substitute a surety bond for the property against which the lien or other claim for payment has been asserted.

§ 9.7 Failure of Payment

If the Architect does not issue a Certificate for Payment, through no fault of the Contractor, within seven days after receipt of the Contractor's Application for Payment, or if the Owner does not pay the Contractor within seven days after the date established in the Contract Documents, the amount certified by the Architect or awarded by binding dispute resolution, then the Contractor may, upon seven additional days' notice to the Owner and Architect, stop the Work until payment of the amount owing has been received. The Contract Time shall be extended appropriately and the Contract Sum shall be increased by the amount of the Contractor's reasonable costs of shutdown, delay and start-up, plus interest as provided for in the Contract Documents.

§ 9.8 Substantial Completion

§ 9.8.1 Substantial Completion is the stage in the progress of the Work when the Work or designated portion thereof is sufficiently complete in accordance with the Contract Documents so that the Owner can occupy or utilize the Work for its intended use.

§ 9.8.2 When the Contractor considers that the Work, or a portion thereof which the Owner agrees to accept separately, is substantially complete, the Contractor shall prepare and submit to the Architect a comprehensive list of items to be completed or corrected prior to final payment. Failure to include an item on such list does not alter the responsibility of the Contractor to complete all Work in accordance with the Contract Documents.

§ 9.8.3 Upon receipt of the Contractor's list, the Architect will make an inspection to determine whether the Work or designated portion thereof is substantially complete. If the Architect's inspection discloses any item, whether or not included on the Contractor's list, which is not sufficiently complete in accordance with the Contract Documents so that the Owner can occupy or utilize the Work or designated portion thereof for its intended use, the Contractor shall, before issuance of the Certificate of Substantial Completion, complete or correct such item upon notification by the Architect. In such case, the Contractor shall then submit a request for another inspection by the Architect to determine Substantial Completion.

§ 9.8.4 When the Work or designated portion thereof is substantially complete, the Architect will prepare a Certificate of Substantial Completion that shall establish the date of Substantial Completion; establish responsibilities of the Owner and Contractor for security, maintenance, heat, utilities, damage to the Work and insurance; and fix the time within which the Contractor shall finish all items on the list accompanying the Certificate. Warranties required by the Contract Documents shall commence on the date of Substantial Completion of the Work or designated portion thereof unless otherwise provided in the Certificate of Substantial Completion.

AIA Document A201™ – 2017. Copyright © 1911, 1915, 1918, 1925, 1937, 1951, 1958, 1961, 1963, 1966, 1970, 1976, 1987, 1997, 2007 and 2017 by The American Institute of Architects. **All rights reserved. WARNING: This AIA® Document is protected by U.S. Copyright Law and International Treaties. Unauthorized reproduction or distribution of this AIA® Document, or any portion of it, may result in severe civil and criminal penalties, and will be prosecuted to the maximum extent possible under the law.** To report copyright violations of AIA Contract Documents, e-mail The American Institute of Architects' legal counsel, copyright@aia.org.

§ 9.8.5 The Certificate of Substantial Completion shall be submitted to the Owner and Contractor for their written acceptance of responsibilities assigned to them in the Certificate. Upon such acceptance, and consent of surety if any, the Owner shall make payment of retainage applying to the Work or designated portion thereof. Such payment shall be adjusted for Work that is incomplete or not in accordance with the requirements of the Contract Documents.

§ 9.9 Partial Occupancy or Use

§ 9.9.1 The Owner may occupy or use any completed or partially completed portion of the Work at any stage when such portion is designated by separate agreement with the Contractor, provided such occupancy or use is consented to by the insurer and authorized by public authorities having jurisdiction over the Project. Such partial occupancy or use may commence whether or not the portion is substantially complete, provided the Owner and Contractor have accepted in writing the responsibilities assigned to each of them for payments, retainage, if any, security, maintenance, heat, utilities, damage to the Work and insurance, and have agreed in writing concerning the period for correction of the Work and commencement of warranties required by the Contract Documents. When the Contractor considers a portion substantially complete, the Contractor shall prepare and submit a list to the Architect as provided under Section 9.8.2. Consent of the Contractor to partial occupancy or use shall not be unreasonably withheld. The stage of the progress of the Work shall be determined by written agreement between the Owner and Contractor or, if no agreement is reached, by decision of the Architect.

§ 9.9.2 Immediately prior to such partial occupancy or use, the Owner, Contractor, and Architect shall jointly inspect the area to be occupied or portion of the Work to be used in order to determine and record the condition of the Work.

§ 9.9.3 Unless otherwise agreed upon, partial occupancy or use of a portion or portions of the Work shall not constitute acceptance of Work not complying with the requirements of the Contract Documents.

§ 9.10 Final Completion and Final Payment

§ 9.10.1 Upon receipt of the Contractor's notice that the Work is ready for final inspection and acceptance and upon receipt of a final Application for Payment, the Architect will promptly make such inspection. When the Architect finds the Work acceptable under the Contract Documents and the Contract fully performed, the Architect will promptly issue a final Certificate for Payment stating that to the best of the Architect's knowledge, information and belief, and on the basis of the Architect's on-site visits and inspections, the Work has been completed in accordance with the Contract Documents and that the entire balance found to be due the Contractor and noted in the final Certificate is due and payable. The Architect's final Certificate for Payment will constitute a further representation that conditions listed in Section 9.10.2 as precedent to the Contractor's being entitled to final payment have been fulfilled.

§ 9.10.2 Neither final payment nor any remaining retained percentage shall become due until the Contractor submits to the Architect (1) an affidavit that payrolls, bills for materials and equipment, and other indebtedness connected with the Work for which the Owner or the Owner's property might be responsible or encumbered (less amounts withheld by Owner) have been paid or otherwise satisfied, (2) a certificate evidencing that insurance required by the Contract Documents to remain in force after final payment is currently in effect, (3) a written statement that the Contractor knows of no reason that the insurance will not be renewable to cover the period required by the Contract Documents, (4) consent of surety, if any, to final payment, (5) documentation of any special warranties, such as manufacturers' warranties or specific Subcontractor warranties, and (6) if required by the Owner, other data establishing payment or satisfaction of obligations, such as receipts and releases and waivers of liens, claims, security interests, or encumbrances arising out of the Contract, to the extent and in such form as may be designated by the Owner. If a Subcontractor refuses to furnish a release or waiver required by the Owner, the Contractor may furnish a bond satisfactory to the Owner to indemnify the Owner against such lien, claim, security interest, or encumbrance. If a lien, claim, security interest, or encumbrance remains unsatisfied after payments are made, the Contractor shall refund to the Owner all money that the Owner may be compelled to pay in discharging the lien, claim, security interest, or encumbrance, including all costs and reasonable attorneys' fees.

§ 9.10.3 If, after Substantial Completion of the Work, final completion thereof is materially delayed through no fault of the Contractor or by issuance of Change Orders affecting final completion, and the Architect so confirms, the Owner shall, upon application by the Contractor and certification by the Architect, and without terminating the Contract, make payment of the balance due for that portion of the Work fully completed, corrected, and accepted. If the remaining balance for Work not fully completed or corrected is less than retainage stipulated in the Contract Documents, and if bonds have been furnished, the written consent of the surety to payment of the balance due for that portion of the Work fully completed and accepted shall be submitted by the Contractor to the Architect prior to certification of such payment. Such payment shall be made under terms and conditions governing final payment, except that it shall not

AIA Document A201™ – 2017. Copyright © 1911, 1915, 1918, 1925, 1937, 1951, 1958, 1961, 1963, 1966, 1970, 1976, 1987, 1997, 2007 and 2017 by The American Institute of Architects. All rights reserved. WARNING: This AIA® Document is protected by U.S. Copyright Law and International Treaties. Unauthorized reproduction or distribution of this AIA® Document, or any portion of it, may result in severe civil and criminal penalties, and will be prosecuted to the maximum extent possible under the law. To report copyright violations of AIA Contract Documents, e-mail The American Institute of Architects' legal counsel, copyright@aia.org.

constitute a waiver of Claims.

§ 9.10.4 The making of final payment shall constitute a waiver of Claims by the Owner except those arising from

- **.1** liens, Claims, security interests, or encumbrances arising out of the Contract and unsettled;
- **.2** failure of the Work to comply with the requirements of the Contract Documents;
- **.3** terms of special warranties required by the Contract Documents; or
- **.4** audits performed by the Owner, if permitted by the Contract Documents, after final payment.

§ 9.10.5 Acceptance of final payment by the Contractor, a Subcontractor, or a supplier, shall constitute a waiver of claims by that payee except those previously made in writing and identified by that payee as unsettled at the time of final Application for Payment.

ARTICLE 10 PROTECTION OF PERSONS AND PROPERTY

§ 10.1 Safety Precautions and Programs

The Contractor shall be responsible for initiating, maintaining, and supervising all safety precautions and programs in connection with the performance of the Contract.

§ 10.2 Safety of Persons and Property

§ 10.2.1 The Contractor shall take reasonable precautions for safety of, and shall provide reasonable protection to prevent damage, injury, or loss to

- **.1** employees on the Work and other persons who may be affected thereby;
- **.2** the Work and materials and equipment to be incorporated therein, whether in storage on or off the site, under care, custody, or control of the Contractor, a Subcontractor, or a Sub-subcontractor; and
- **.3** other property at the site or adjacent thereto, such as trees, shrubs, lawns, walks, pavements, roadways, structures, and utilities not designated for removal, relocation, or replacement in the course of construction.

§ 10.2.2 The Contractor shall comply with, and give notices required by applicable laws, statutes, ordinances, codes, rules and regulations, and lawful orders of public authorities, bearing on safety of persons or property or their protection from damage, injury, or loss.

§ 10.2.3 The Contractor shall implement, erect, and maintain, as required by existing conditions and performance of the Contract, reasonable safeguards for safety and protection, including posting danger signs and other warnings against hazards; promulgating safety regulations; and notifying the owners and users of adjacent sites and utilities of the safeguards.

§ 10.2.4 When use or storage of explosives or other hazardous materials or equipment, or unusual methods are necessary for execution of the Work, the Contractor shall exercise utmost care and carry on such activities under supervision of properly qualified personnel.

§ 10.2.5 The Contractor shall promptly remedy damage and loss (other than damage or loss insured under property insurance required by the Contract Documents) to property referred to in Sections 10.2.1.2 and 10.2.1.3 caused in whole or in part by the Contractor, a Subcontractor, a Sub-subcontractor, or anyone directly or indirectly employed by any of them, or by anyone for whose acts they may be liable and for which the Contractor is responsible under Sections 10.2.1.2 and 10.2.1.3. The Contractor may make a Claim for the cost to remedy the damage or loss to the extent such damage or loss is attributable to acts or omissions of the Owner or Architect or anyone directly or indirectly employed by either of them, or by anyone for whose acts either of them may be liable, and not attributable to the fault or negligence of the Contractor. The foregoing obligations of the Contractor are in addition to the Contractor's obligations under Section 3.18.

§ 10.2.6 The Contractor shall designate a responsible member of the Contractor's organization at the site whose duty shall be the prevention of accidents. This person shall be the Contractor's superintendent unless otherwise designated by the Contractor in writing to the Owner and Architect.

§ 10.2.7 The Contractor shall not permit any part of the construction or site to be loaded so as to cause damage or create an unsafe condition.

AIA Document A201™ – 2017. Copyright © 1911, 1915, 1918, 1925, 1937, 1951, 1958, 1961, 1963, 1966, 1970, 1976, 1987, 1997, 2007 and 2017 by The American Institute of Architects. All rights reserved. WARNING: This AIA® Document is protected by U.S. Copyright Law and International Treaties. Unauthorized reproduction or distribution of this AIA® Document, or any portion of it, may result in severe civil and criminal penalties, and will be prosecuted to the maximum extent possible under the law. To report copyright violations of AIA Contract Documents, e-mail The American Institute of Architects' legal counsel, copyright@aia.org.

§ 10.2.8 Injury or Damage to Person or Property
If either party suffers injury or damage to person or property because of an act or omission of the other party, or of others for whose acts such party is legally responsible, notice of the injury or damage, whether or not insured, shall be given to the other party within a reasonable time not exceeding 21 days after discovery. The notice shall provide sufficient detail to enable the other party to investigate the matter.

§ 10.3 Hazardous Materials and Substances
§ 10.3.1 The Contractor is responsible for compliance with any requirements included in the Contract Documents regarding hazardous materials or substances. If the Contractor encounters a hazardous material or substance not addressed in the Contract Documents and if reasonable precautions will be inadequate to prevent foreseeable bodily injury or death to persons resulting from a material or substance, including but not limited to asbestos or polychlorinated biphenyl (PCB), encountered on the site by the Contractor, the Contractor shall, upon recognizing the condition, immediately stop Work in the affected area and notify the Owner and Architect of the condition.

§ 10.3.2 Upon receipt of the Contractor's notice, the Owner shall obtain the services of a licensed laboratory to verify the presence or absence of the material or substance reported by the Contractor and, in the event such material or substance is found to be present, to cause it to be rendered harmless. Unless otherwise required by the Contract Documents, the Owner shall furnish in writing to the Contractor and Architect the names and qualifications of persons or entities who are to perform tests verifying the presence or absence of the material or substance or who are to perform the task of removal or safe containment of the material or substance. The Contractor and the Architect will promptly reply to the Owner in writing stating whether or not either has reasonable objection to the persons or entities proposed by the Owner. If either the Contractor or Architect has an objection to a person or entity proposed by the Owner, the Owner shall propose another to whom the Contractor and the Architect have no reasonable objection. When the material or substance has been rendered harmless, Work in the affected area shall resume upon written agreement of the Owner and Contractor. By Change Order, the Contract Time shall be extended appropriately and the Contract Sum shall be increased by the amount of the Contractor's reasonable additional costs of shutdown, delay, and start-up.

§ 10.3.3 To the fullest extent permitted by law, the Owner shall indemnify and hold harmless the Contractor, Subcontractors, Architect, Architect's consultants, and agents and employees of any of them from and against claims, damages, losses, and expenses, including but not limited to attorneys' fees, arising out of or resulting from performance of the Work in the affected area if in fact the material or substance presents the risk of bodily injury or death as described in Section 10.3.1 and has not been rendered harmless, provided that such claim, damage, loss, or expense is attributable to bodily injury, sickness, disease or death, or to injury to or destruction of tangible property (other than the Work itself), except to the extent that such damage, loss, or expense is due to the fault or negligence of the party seeking indemnity.

§ 10.3.4 The Owner shall not be responsible under this Section 10.3 for hazardous materials or substances the Contractor brings to the site unless such materials or substances are required by the Contract Documents. The Owner shall be responsible for hazardous materials or substances required by the Contract Documents, except to the extent of the Contractor's fault or negligence in the use and handling of such materials or substances.

§ 10.3.5 The Contractor shall reimburse the Owner for the cost and expense the Owner incurs (1) for remediation of hazardous materials or substances the Contractor brings to the site and negligently handles, or (2) where the Contractor fails to perform its obligations under Section 10.3.1, except to the extent that the cost and expense are due to the Owner's fault or negligence.

§ 10.3.6 If, without negligence on the part of the Contractor, the Contractor is held liable by a government agency for the cost of remediation of a hazardous material or substance solely by reason of performing Work as required by the Contract Documents, the Owner shall reimburse the Contractor for all cost and expense thereby incurred.

§ 10.4 Emergencies
In an emergency affecting safety of persons or property, the Contractor shall act, at the Contractor's discretion, to prevent threatened damage, injury, or loss. Additional compensation or extension of time claimed by the Contractor on account of an emergency shall be determined as provided in Article 15 and Article 7.

ARTICLE 11 INSURANCE AND BONDS
§ 11.1 Contractor's Insurance and Bonds
§ 11.1.1 The Contractor shall purchase and maintain insurance of the types and limits of liability, containing the

AIA Document A201™ – 2017. Copyright © 1911, 1915, 1918, 1925, 1937, 1951, 1958, 1961, 1963, 1966, 1970, 1976, 1987, 1997, 2007 and 2017 by The American Institute of Architects. All rights reserved. WARNING: This AIA© Document is protected by U.S. Copyright Law and International Treaties. Unauthorized reproduction or distribution of this AIA© Document, or any portion of it, may result in severe civil and criminal penalties, and will be prosecuted to the maximum extent possible under the law. To report copyright violations of AIA Contract Documents, e-mail The American Institute of Architects' legal counsel, copyright@aia.org.

endorsements, and subject to the terms and conditions, as described in the Agreement or elsewhere in the Contract Documents. The Contractor shall purchase and maintain the required insurance from an insurance company or insurance companies lawfully authorized to issue insurance in the jurisdiction where the Project is located. The Owner, Architect, and Architect's consultants shall be named as additional insureds under the Contractor's commercial general liability policy or as otherwise described in the Contract Documents.

§ 11.1.2 The Contractor shall provide surety bonds of the types, for such penal sums, and subject to such terms and conditions as required by the Contract Documents. The Contractor shall purchase and maintain the required bonds from a company or companies lawfully authorized to issue surety bonds in the jurisdiction where the Project is located.

§ 11.1.3 Upon the request of any person or entity appearing to be a potential beneficiary of bonds covering payment of obligations arising under the Contract, the Contractor shall promptly furnish a copy of the bonds or shall authorize a copy to be furnished.

§ 11.1.4 Notice of Cancellation or Expiration of Contractor's Required Insurance. Within three (3) business days of the date the Contractor becomes aware of an impending or actual cancellation or expiration of any insurance required by the Contract Documents, the Contractor shall provide notice to the Owner of such impending or actual cancellation or expiration. Upon receipt of notice from the Contractor, the Owner shall, unless the lapse in coverage arises from an act or omission of the Owner, have the right to stop the Work until the lapse in coverage has been cured by the procurement of replacement coverage by the Contractor. The furnishing of notice by the Contractor shall not relieve the Contractor of any contractual obligation to provide any required coverage.

§ 11.2 Owner's Insurance

§ 11.2.1 The Owner shall purchase and maintain insurance of the types and limits of liability, containing the endorsements, and subject to the terms and conditions, as described in the Agreement or elsewhere in the Contract Documents. The Owner shall purchase and maintain the required insurance from an insurance company or insurance companies lawfully authorized to issue insurance in the jurisdiction where the Project is located.

§ 11.2.2 Failure to Purchase Required Property Insurance. If the Owner fails to purchase and maintain the required property insurance, with all of the coverages and in the amounts described in the Agreement or elsewhere in the Contract Documents, the Owner shall inform the Contractor in writing prior to commencement of the Work. Upon receipt of notice from the Owner, the Contractor may delay commencement of the Work and may obtain insurance that will protect the interests of the Contractor, Subcontractors, and Sub-Subcontractors in the Work. When the failure to provide coverage has been cured or resolved, the Contract Sum and Contract Time shall be equitably adjusted. In the event the Owner fails to procure coverage, the Owner waives all rights against the Contractor, Subcontractors, and Sub-subcontractors to the extent the loss to the Owner would have been covered by the insurance to have been procured by the Owner. The cost of the insurance shall be charged to the Owner by a Change Order. If the Owner does not provide written notice, and the Contractor is damaged by the failure or neglect of the Owner to purchase or maintain the required insurance, the Owner shall reimburse the Contractor for all reasonable costs and damages attributable thereto.

§ 11.2.3 Notice of Cancellation or Expiration of Owner's Required Property Insurance. Within three (3) business days of the date the Owner becomes aware of an impending or actual cancellation or expiration of any property insurance required by the Contract Documents, the Owner shall provide notice to the Contractor of such impending or actual cancellation or expiration. Unless the lapse in coverage arises from an act or omission of the Contractor: (1) the Contractor, upon receipt of notice from the Owner, shall have the right to stop the Work until the lapse in coverage has been cured by the procurement of replacement coverage by either the Owner or the Contractor; (2) the Contract Time and Contract Sum shall be equitably adjusted; and (3) the Owner waives all rights against the Contractor, Subcontractors, and Sub-subcontractors to the extent any loss to the Owner would have been covered by the insurance had it not expired or been cancelled. If the Contractor purchases replacement coverage, the cost of the insurance shall be charged to the Owner by an appropriate Change Order. The furnishing of notice by the Owner shall not relieve the Owner of any contractual obligation to provide required insurance.

§ 11.3 Waivers of Subrogation

§ 11.3.1 The Owner and Contractor waive all rights against (1) each other and any of their subcontractors, sub-subcontractors, agents, and employees, each of the other; (2) the Architect and Architect's consultants; and (3) Separate Contractors, if any, and any of their subcontractors, sub-subcontractors, agents, and employees, for damages caused by fire, or other causes of loss, to the extent those losses are covered by property insurance required by the Agreement or other property insurance applicable to the Project, except such rights as they have to proceeds of such insurance. The

AIA Document A201™ – 2017. Copyright © 1911, 1915, 1918, 1925, 1937, 1951, 1958, 1961, 1963, 1966, 1970, 1976, 1987, 1997, 2007 and 2017 by The American Institute of Architects. All rights reserved. WARNING: This AIA® Document is protected by U.S. Copyright Law and International Treaties. Unauthorized reproduction or distribution of this AIA® Document, or any portion of it, may result in severe civil and criminal penalties, and will be prosecuted to the maximum extent possible under the law. To report copyright violations of AIA Contract Documents, e-mail The American Institute of Architects' legal counsel, copyright@aia.org.

Owner or Contractor, as appropriate, shall require similar written waivers in favor of the individuals and entities identified above from the Architect, Architect's consultants, Separate Contractors, subcontractors, and sub-subcontractors. The policies of insurance purchased and maintained by each person or entity agreeing to waive claims pursuant to this section 11.3.1 shall not prohibit this waiver of subrogation. This waiver of subrogation shall be effective as to a person or entity (1) even though that person or entity would otherwise have a duty of indemnification, contractual or otherwise, (2) even though that person or entity did not pay the insurance premium directly or indirectly, or (3) whether or not the person or entity had an insurable interest in the damaged property.

§ 11.3.2 If during the Project construction period the Owner insures properties, real or personal or both, at or adjacent to the site by property insurance under policies separate from those insuring the Project, or if after final payment property insurance is to be provided on the completed Project through a policy or policies other than those insuring the Project during the construction period, to the extent permissible by such policies, the Owner waives all rights in accordance with the terms of Section 11.3.1 for damages caused by fire or other causes of loss covered by this separate property insurance.

§ 11.4 Loss of Use, Business Interruption, and Delay in Completion Insurance

The Owner, at the Owner's option, may purchase and maintain insurance that will protect the Owner against loss of use of the Owner's property, or the inability to conduct normal operations, due to fire or other causes of loss. The Owner waives all rights of action against the Contractor and Architect for loss of use of the Owner's property, due to fire or other hazards however caused.

§11.5 Adjustment and Settlement of Insured Loss

§ 11.5.1 A loss insured under the property insurance required by the Agreement shall be adjusted by the Owner as fiduciary and made payable to the Owner as fiduciary for the insureds, as their interests may appear, subject to requirements of any applicable mortgagee clause and of Section 11.5.2. The Owner shall pay the Architect and Contractor their just shares of insurance proceeds received by the Owner, and by appropriate agreements the Architect and Contractor shall make payments to their consultants and Subcontractors in similar manner.

§ 11.5.2 Prior to settlement of an insured loss, the Owner shall notify the Contractor of the terms of the proposed settlement as well as the proposed allocation of the insurance proceeds. The Contractor shall have 14 days from receipt of notice to object to the proposed settlement or allocation of the proceeds. If the Contractor does not object, the Owner shall settle the loss and the Contractor shall be bound by the settlement and allocation. Upon receipt, the Owner shall deposit the insurance proceeds in a separate account and make the appropriate distributions. Thereafter, if no other agreement is made or the Owner does not terminate the Contract for convenience, the Owner and Contractor shall execute a Change Order for reconstruction of the damaged or destroyed Work in the amount allocated for that purpose. If the Contractor timely objects to either the terms of the proposed settlement or the allocation of the proceeds, the Owner may proceed to settle the insured loss, and any dispute between the Owner and Contractor arising out of the settlement or allocation of the proceeds shall be resolved pursuant to Article 15. Pending resolution of any dispute, the Owner may issue a Construction Change Directive for the reconstruction of the damaged or destroyed Work.

ARTICLE 12 UNCOVERING AND CORRECTION OF WORK

§ 12.1 Uncovering of Work

§ 12.1.1 If a portion of the Work is covered contrary to the Architect's request or to requirements specifically expressed in the Contract Documents, it must, if requested in writing by the Architect, be uncovered for the Architect's examination and be replaced at the Contractor's expense without change in the Contract Time.

§ 12.1.2 If a portion of the Work has been covered that the Architect has not specifically requested to examine prior to its being covered, the Architect may request to see such Work and it shall be uncovered by the Contractor. If such Work is in accordance with the Contract Documents, the Contractor shall be entitled to an equitable adjustment to the Contract Sum and Contract Time as may be appropriate. If such Work is not in accordance with the Contract Documents, the costs of uncovering the Work, and the cost of correction, shall be at the Contractor's expense.

§ 12.2 Correction of Work

§ 12.2.1 Before Substantial Completion

The Contractor shall promptly correct Work rejected by the Architect or failing to conform to the requirements of the Contract Documents, discovered before Substantial Completion and whether or not fabricated, installed or completed. Costs of correcting such rejected Work, including additional testing and inspections, the cost of uncovering and replacement, and compensation for the Architect's services and expenses made necessary thereby, shall be at the

AIA Document A201™ – 2017. Copyright © 1911, 1915, 1918, 1925, 1937, 1951, 1958, 1961, 1963, 1966, 1970, 1976, 1987, 1997, 2007 and 2017 by The American Institute of Architects. All rights reserved. WARNING: This AIA® Document is protected by U.S. Copyright Law and International Treaties. Unauthorized reproduction or distribution of this AIA® Document, or any portion of it, may result in severe civil and criminal penalties, and will be prosecuted to the maximum extent possible under the law. To report copyright violations of AIA Contract Documents, e-mail The American Institute of Architects' legal counsel, copyright@aia.org.

Contractor's expense.

§ 12.2.2 After Substantial Completion

§ 12.2.2.1 In addition to the Contractor's obligations under Section 3.5, if, within one year after the date of Substantial Completion of the Work or designated portion thereof or after the date for commencement of warranties established under Section 9.9.1, or by terms of any applicable special warranty required by the Contract Documents, any of the Work is found to be not in accordance with the requirements of the Contract Documents, the Contractor shall correct it promptly after receipt of notice from the Owner to do so, unless the Owner has previously given the Contractor a written acceptance of such condition. The Owner shall give such notice promptly after discovery of the condition. During the one-year period for correction of Work, if the Owner fails to notify the Contractor and give the Contractor an opportunity to make the correction, the Owner waives the rights to require correction by the Contractor and to make a claim for breach of warranty. If the Contractor fails to correct nonconforming Work within a reasonable time during that period after receipt of notice from the Owner or Architect, the Owner may correct it in accordance with Section 2.5.

§ 12.2.2.2 The one-year period for correction of Work shall be extended with respect to portions of Work first performed after Substantial Completion by the period of time between Substantial Completion and the actual completion of that portion of the Work.

§ 12.2.2.3 The one-year period for correction of Work shall not be extended by corrective Work performed by the Contractor pursuant to this Section 12.2.

§ 12.2.3 The Contractor shall remove from the site portions of the Work that are not in accordance with the requirements of the Contract Documents and are neither corrected by the Contractor nor accepted by the Owner.

§ 12.2.4 The Contractor shall bear the cost of correcting destroyed or damaged construction of the Owner or Separate Contractors, whether completed or partially completed, caused by the Contractor's correction or removal of Work that is not in accordance with the requirements of the Contract Documents.

§ 12.2.5 Nothing contained in this Section 12.2 shall be construed to establish a period of limitation with respect to other obligations the Contractor has under the Contract Documents. Establishment of the one-year period for correction of Work as described in Section 12.2.2 relates only to the specific obligation of the Contractor to correct the Work, and has no relationship to the time within which the obligation to comply with the Contract Documents may be sought to be enforced, nor to the time within which proceedings may be commenced to establish the Contractor's liability with respect to the Contractor's obligations other than specifically to correct the Work.

§ 12.3 Acceptance of Nonconforming Work

If the Owner prefers to accept Work that is not in accordance with the requirements of the Contract Documents, the Owner may do so instead of requiring its removal and correction, in which case the Contract Sum will be reduced as appropriate and equitable. Such adjustment shall be effected whether or not final payment has been made.

ARTICLE 13 MISCELLANEOUS PROVISIONS

§ 13.1 Governing Law

The Contract shall be governed by the law of the place where the Project is located, excluding that jurisdiction's choice of law rules. If the parties have selected arbitration as the method of binding dispute resolution, the Federal Arbitration Act shall govern Section 15.4.

§ 13.2 Successors and Assigns

§ 13.2.1 The Owner and Contractor respectively bind themselves, their partners, successors, assigns, and legal representatives to covenants, agreements, and obligations contained in the Contract Documents. Except as provided in Section 13.2.2, neither party to the Contract shall assign the Contract as a whole without written consent of the other. If either party attempts to make an assignment without such consent, that party shall nevertheless remain legally responsible for all obligations under the Contract.

§ 13.2.2 The Owner may, without consent of the Contractor, assign the Contract to a lender providing construction financing for the Project, if the lender assumes the Owner's rights and obligations under the Contract Documents. The Contractor shall execute all consents reasonably required to facilitate the assignment.

AIA Document A201™ – 2017. Copyright © 1911, 1915, 1918, 1925, 1937, 1951, 1958, 1961, 1963, 1966, 1970, 1976, 1987, 1997, 2007 and 2017 by The American Institute of Architects. All rights reserved. WARNING: This AIA® Document is protected by U.S. Copyright Law and International Treaties. Unauthorized reproduction or distribution of this AIA® Document, or any portion of it, may result in severe civil and criminal penalties, and will be prosecuted to the maximum extent possible under the law. To report copyright violations of AIA Contract Documents, e-mail The American Institute of Architects' legal counsel, copyright@aia.org.

§ 13.3 Rights and Remedies

§ 13.3.1 Duties and obligations imposed by the Contract Documents and rights and remedies available thereunder shall be in addition to and not a limitation of duties, obligations, rights, and remedies otherwise imposed or available by law.

§ 13.3.2 No action or failure to act by the Owner, Architect, or Contractor shall constitute a waiver of a right or duty afforded them under the Contract, nor shall such action or failure to act constitute approval of or acquiescence in a breach thereunder, except as may be specifically agreed upon in writing.

§ 13.4 Tests and Inspections

§ 13.4.1 Tests, inspections, and approvals of portions of the Work shall be made as required by the Contract Documents and by applicable laws, statutes, ordinances, codes, rules, and regulations or lawful orders of public authorities. Unless otherwise provided, the Contractor shall make arrangements for such tests, inspections, and approvals with an independent testing laboratory or entity acceptable to the Owner, or with the appropriate public authority, and shall bear all related costs of tests, inspections, and approvals. The Contractor shall give the Architect timely notice of when and where tests and inspections are to be made so that the Architect may be present for such procedures. The Owner shall bear costs of tests, inspections, or approvals that do not become requirements until after bids are received or negotiations concluded. The Owner shall directly arrange and pay for tests, inspections, or approvals where building codes or applicable laws or regulations so require.

§ 13.4.2 If the Architect, Owner, or public authorities having jurisdiction determine that portions of the Work require additional testing, inspection, or approval not included under Section 13.4.1, the Architect will, upon written authorization from the Owner, instruct the Contractor to make arrangements for such additional testing, inspection, or approval, by an entity acceptable to the Owner, and the Contractor shall give timely notice to the Architect of when and where tests and inspections are to be made so that the Architect may be present for such procedures. Such costs, except as provided in Section 13.4.3, shall be at the Owner's expense.

§ 13.4.3 If procedures for testing, inspection, or approval under Sections 13.4.1 and 13.4.2 reveal failure of the portions of the Work to comply with requirements established by the Contract Documents, all costs made necessary by such failure, including those of repeated procedures and compensation for the Architect's services and expenses, shall be at the Contractor's expense.

§ 13.4.4 Required certificates of testing, inspection, or approval shall, unless otherwise required by the Contract Documents, be secured by the Contractor and promptly delivered to the Architect.

§ 13.4.5 If the Architect is to observe tests, inspections, or approvals required by the Contract Documents, the Architect will do so promptly and, where practicable, at the normal place of testing.

§ 13.4.6 Tests or inspections conducted pursuant to the Contract Documents shall be made promptly to avoid unreasonable delay in the Work.

§ 13.5 Interest

Payments due and unpaid under the Contract Documents shall bear interest from the date payment is due at the rate the parties agree upon in writing or, in the absence thereof, at the legal rate prevailing from time to time at the place where the Project is located.

ARTICLE 14 TERMINATION OR SUSPENSION OF THE CONTRACT

§ 14.1 Termination by the Contractor

§ 14.1.1 The Contractor may terminate the Contract if the Work is stopped for a period of 30 consecutive days through no act or fault of the Contractor, a Subcontractor, a Sub-subcontractor, their agents or employees, or any other persons or entities performing portions of the Work, for any of the following reasons:

- **.1** Issuance of an order of a court or other public authority having jurisdiction that requires all Work to be stopped;
- **.2** An act of government, such as a declaration of national emergency, that requires all Work to be stopped;
- **.3** Because the Architect has not issued a Certificate for Payment and has not notified the Contractor of the reason for withholding certification as provided in Section 9.4.1, or because the Owner has not made payment on a Certificate for Payment within the time stated in the Contract Documents; or
- **.4** The Owner has failed to furnish to the Contractor reasonable evidence as required by Section 2.2.

AIA Document A201™ – 2017. Copyright © 1911, 1915, 1918, 1925, 1937, 1951, 1958, 1961, 1963, 1966, 1970, 1976, 1987, 1997, 2007 and 2017 by The American Institute of Architects. All rights reserved. WARNING: This AIA® Document is protected by U.S. Copyright Law and International Treaties. Unauthorized reproduction or distribution of this AIA® Document, or any portion of it, may result in severe civil and criminal penalties, and will be prosecuted to the maximum extent possible under the law. To report copyright violations of AIA Contract Documents, e-mail The American Institute of Architects' legal counsel, copyright@aia.org.

§ 14.1.2 The Contractor may terminate the Contract if, through no act or fault of the Contractor, a Subcontractor, a Sub-subcontractor, their agents or employees, or any other persons or entities performing portions of the Work, repeated suspensions, delays, or interruptions of the entire Work by the Owner as described in Section 14.3, constitute in the aggregate more than 100 percent of the total number of days scheduled for completion, or 120 days in any 365-day period, whichever is less.

§ 14.1.3 If one of the reasons described in Section 14.1.1 or 14.1.2 exists, the Contractor may, upon seven days' notice to the Owner and Architect, terminate the Contract and recover from the Owner payment for Work executed, as well as reasonable overhead and profit on Work not executed, and costs incurred by reason of such termination.

§ 14.1.4 If the Work is stopped for a period of 60 consecutive days through no act or fault of the Contractor, a Subcontractor, a Sub-subcontractor, or their agents or employees or any other persons or entities performing portions of the Work because the Owner has repeatedly failed to fulfill the Owner's obligations under the Contract Documents with respect to matters important to the progress of the Work, the Contractor may, upon seven additional days' notice to the Owner and the Architect, terminate the Contract and recover from the Owner as provided in Section 14.1.3.

§ 14.2 Termination by the Owner for Cause

§ 14.2.1 The Owner may terminate the Contract if the Contractor

- **.1** repeatedly refuses or fails to supply enough properly skilled workers or proper materials;
- **.2** fails to make payment to Subcontractors or suppliers in accordance with the respective agreements between the Contractor and the Subcontractors or Suppliers;
- **.3** repeatedly disregards applicable laws, statutes, ordinances, codes, rules and regulations, or lawful orders of a public authority; or
- **.4** otherwise is guilty of substantial breach of a provision of the Contract Documents.

§ 14.2.2 When any of the reasons described in Section 14.2.1 exist, and upon certification by the Architect that sufficient cause exists to justify such action, the Owner may, without prejudice to any other rights or remedies of the Owner and after giving the Contractor and the Contractor's surety, if any, seven days' notice, terminate employment of the Contractor and may, subject to any prior rights of the surety:

- **.1** Exclude the Contractor from the site and take possession of all materials, equipment, tools, and construction equipment and machinery thereon owned by the Contractor;
- **.2** Accept assignment of subcontracts pursuant to Section 5.4; and
- **.3** Finish the Work by whatever reasonable method the Owner may deem expedient. Upon written request of the Contractor, the Owner shall furnish to the Contractor a detailed accounting of the costs incurred by the Owner in finishing the Work.

§ 14.2.3 When the Owner terminates the Contract for one of the reasons stated in Section 14.2.1, the Contractor shall not be entitled to receive further payment until the Work is finished.

§ 14.2.4 If the unpaid balance of the Contract Sum exceeds costs of finishing the Work, including compensation for the Architect's services and expenses made necessary thereby, and other damages incurred by the Owner and not expressly waived, such excess shall be paid to the Contractor. If such costs and damages exceed the unpaid balance, the Contractor shall pay the difference to the Owner. The amount to be paid to the Contractor or Owner, as the case may be, shall be certified by the Initial Decision Maker, upon application, and this obligation for payment shall survive termination of the Contract.

§ 14.3 Suspension by the Owner for Convenience

§ 14.3.1 The Owner may, without cause, order the Contractor in writing to suspend, delay or interrupt the Work, in whole or in part for such period of time as the Owner may determine.

§ 14.3.2 The Contract Sum and Contract Time shall be adjusted for increases in the cost and time caused by suspension, delay, or interruption under Section 14.3.1. Adjustment of the Contract Sum shall include profit. No adjustment shall be made to the extent

- **.1** that performance is, was, or would have been, so suspended, delayed, or interrupted, by another cause for which the Contractor is responsible; or
- **.2** that an equitable adjustment is made or denied under another provision of the Contract.

AIA Document A201™ – 2017. Copyright © 1911, 1915, 1918, 1925, 1937, 1951, 1958, 1961, 1963, 1966, 1970, 1976, 1987, 1997, 2007 and 2017 by The American Institute of Architects. **All rights reserved.** WARNING: This AIA® Document is protected by U.S. Copyright Law and International Treaties. Unauthorized reproduction or distribution of this AIA® Document, or any portion of it, may result in severe civil and criminal penalties, and will be prosecuted to the maximum extent possible under the law. To report copyright violations of AIA Contract Documents, e-mail The American Institute of Architects' legal counsel, copyright@aia.org.

§ 14.4 Termination by the Owner for Convenience

§ 14.4.1 The Owner may, at any time, terminate the Contract for the Owner's convenience and without cause.

§ 14.4.2 Upon receipt of notice from the Owner of such termination for the Owner's convenience, the Contractor shall

- **.1** cease operations as directed by the Owner in the notice;
- **.2** take actions necessary, or that the Owner may direct, for the protection and preservation of the Work; and
- **.3** except for Work directed to be performed prior to the effective date of termination stated in the notice, terminate all existing subcontracts and purchase orders and enter into no further subcontracts and purchase orders.

§ 14.4.3 In case of such termination for the Owner's convenience, the Owner shall pay the Contractor for Work properly executed; costs incurred by reason of the termination, including costs attributable to termination of Subcontracts; and the termination fee, if any, set forth in the Agreement.

ARTICLE 15 CLAIMS AND DISPUTES

§ 15.1 Claims

§ 15.1.1 Definition

A Claim is a demand or assertion by one of the parties seeking, as a matter of right, payment of money, a change in the Contract Time, or other relief with respect to the terms of the Contract. The term "Claim" also includes other disputes and matters in question between the Owner and Contractor arising out of or relating to the Contract. The responsibility to substantiate Claims shall rest with the party making the Claim. This Section 15.1.1 does not require the Owner to file a Claim in order to impose liquidated damages in accordance with the Contract Documents.

§ 15.1.2 Time Limits on Claims

The Owner and Contractor shall commence all Claims and causes of action against the other and arising out of or related to the Contract, whether in contract, tort, breach of warranty or otherwise, in accordance with the requirements of the binding dispute resolution method selected in the Agreement and within the period specified by applicable law, but in any case not more than 10 years after the date of Substantial Completion of the Work. The Owner and Contractor waive all Claims and causes of action not commenced in accordance with this Section 15.1.2.

§ 15.1.3 Notice of Claims

§ 15.1.3.1 Claims by either the Owner or Contractor, where the condition giving rise to the Claim is first discovered prior to expiration of the period for correction of the Work set forth in Section 12.2.2, shall be initiated by notice to the other party and to the Initial Decision Maker with a copy sent to the Architect, if the Architect is not serving as the Initial Decision Maker. Claims by either party under this Section 15.1.3.1 shall be initiated within 21 days after occurrence of the event giving rise to such Claim or within 21 days after the claimant first recognizes the condition giving rise to the Claim, whichever is later.

§ 15.1.3.2 Claims by either the Owner or Contractor, where the condition giving rise to the Claim is first discovered after expiration of the period for correction of the Work set forth in Section 12.2.2, shall be initiated by notice to the other party. In such event, no decision by the Initial Decision Maker is required.

§ 15.1.4 Continuing Contract Performance

§ 15.1.4.1 Pending final resolution of a Claim, except as otherwise agreed in writing or as provided in Section 9.7 and Article 14, the Contractor shall proceed diligently with performance of the Contract and the Owner shall continue to make payments in accordance with the Contract Documents.

§ 15.1.4.2 The Contract Sum and Contract Time shall be adjusted in accordance with the Initial Decision Maker's decision, subject to the right of either party to proceed in accordance with this Article 15. The Architect will issue Certificates for Payment in accordance with the decision of the Initial Decision Maker.

§ 15.1.5 Claims for Additional Cost

If the Contractor wishes to make a Claim for an increase in the Contract Sum, notice as provided in Section 15.1.3 shall be given before proceeding to execute the portion of the Work that is the subject of the Claim. Prior notice is not required for Claims relating to an emergency endangering life or property arising under Section 10.4.

§ 15.1.6 Claims for Additional Time

§ 15.1.6.1 If the Contractor wishes to make a Claim for an increase in the Contract Time, notice as provided in Section

Init.
/
AIA Document A201™ – 2017. Copyright © 1911, 1915, 1918, 1925, 1937, 1951, 1958, 1961, 1963, 1966, 1970, 1976, 1987, 1997, 2007 and 2017 by The American Institute of Architects. All rights reserved. WARNING: This AIA® Document is protected by U.S. Copyright Law and International Treaties. Unauthorized reproduction or distribution of this AIA® Document, or any portion of it, may result in severe civil and criminal penalties, and will be prosecuted to the maximum extent possible under the law. To report copyright violations of AIA Contract Documents, e-mail The American Institute of Architects' legal counsel, copyright@aia.org.

15.1.3 shall be given. The Contractor's Claim shall include an estimate of cost and of probable effect of delay on progress of the Work. In the case of a continuing delay, only one Claim is necessary.

§ 15.1.6.2 If adverse weather conditions are the basis for a Claim for additional time, such Claim shall be documented by data substantiating that weather conditions were abnormal for the period of time, could not have been reasonably anticipated, and had an adverse effect on the scheduled construction.

§ 15.1.7 Waiver of Claims for Consequential Damages

The Contractor and Owner waive Claims against each other for consequential damages arising out of or relating to this Contract. This mutual waiver includes

- **.1** damages incurred by the Owner for rental expenses, for losses of use, income, profit, financing, business and reputation, and for loss of management or employee productivity or of the services of such persons; and
- **.2** damages incurred by the Contractor for principal office expenses including the compensation of personnel stationed there, for losses of financing, business and reputation, and for loss of profit, except anticipated profit arising directly from the Work.

This mutual waiver is applicable, without limitation, to all consequential damages due to either party's termination in accordance with Article 14. Nothing contained in this Section 15.1.7 shall be deemed to preclude assessment of liquidated damages, when applicable, in accordance with the requirements of the Contract Documents.

§ 15.2 Initial Decision

§ 15.2.1 Claims, excluding those where the condition giving rise to the Claim is first discovered after expiration of the period for correction of the Work set forth in Section 12.2.2 or arising under Sections 10.3, 10.4, and 11.5, shall be referred to the Initial Decision Maker for initial decision. The Architect will serve as the Initial Decision Maker, unless otherwise indicated in the Agreement. Except for those Claims excluded by this Section 15.2.1, an initial decision shall be required as a condition precedent to mediation of any Claim. If an initial decision has not been rendered within 30 days after the Claim has been referred to the Initial Decision Maker, the party asserting the Claim may demand mediation and binding dispute resolution without a decision having been rendered. Unless the Initial Decision Maker and all affected parties agree, the Initial Decision Maker will not decide disputes between the Contractor and persons or entities other than the Owner.

§ 15.2.2 The Initial Decision Maker will review Claims and within ten days of the receipt of a Claim take one or more of the following actions: (1) request additional supporting data from the claimant or a response with supporting data from the other party, (2) reject the Claim in whole or in part, (3) approve the Claim, (4) suggest a compromise, or (5) advise the parties that the Initial Decision Maker is unable to resolve the Claim if the Initial Decision Maker lacks sufficient information to evaluate the merits of the Claim or if the Initial Decision Maker concludes that, in the Initial Decision Maker's sole discretion, it would be inappropriate for the Initial Decision Maker to resolve the Claim.

§ 15.2.3 In evaluating Claims, the Initial Decision Maker may, but shall not be obligated to, consult with or seek information from either party or from persons with special knowledge or expertise who may assist the Initial Decision Maker in rendering a decision. The Initial Decision Maker may request the Owner to authorize retention of such persons at the Owner's expense.

§ 15.2.4 If the Initial Decision Maker requests a party to provide a response to a Claim or to furnish additional supporting data, such party shall respond, within ten days after receipt of the request, and shall either (1) provide a response on the requested supporting data, (2) advise the Initial Decision Maker when the response or supporting data will be furnished, or (3) advise the Initial Decision Maker that no supporting data will be furnished. Upon receipt of the response or supporting data, if any, the Initial Decision Maker will either reject or approve the Claim in whole or in part.

§ 15.2.5 The Initial Decision Maker will render an initial decision approving or rejecting the Claim, or indicating that the Initial Decision Maker is unable to resolve the Claim. This initial decision shall (1) be in writing; (2) state the reasons therefor; and (3) notify the parties and the Architect, if the Architect is not serving as the Initial Decision Maker, of any change in the Contract Sum or Contract Time or both. The initial decision shall be final and binding on the parties but subject to mediation and, if the parties fail to resolve their dispute through mediation, to binding dispute resolution.

§ 15.2.6 Either party may file for mediation of an initial decision at any time, subject to the terms of Section 15.2.6.1.

AIA Document A201™ – 2017. Copyright © 1911, 1915, 1918, 1925, 1937, 1951, 1958, 1961, 1963, 1966, 1970, 1976, 1987, 1997, 2007 and 2017 by The American Institute of Architects. **All rights reserved.** WARNING: This AIA® Document is protected by U.S. Copyright Law and International Treaties. Unauthorized reproduction or distribution of this AIA® Document, or any portion of it, may result in severe civil and criminal penalties, and will be prosecuted to the maximum extent possible under the law. To report copyright violations of AIA Contract Documents, e-mail The American Institute of Architects' legal counsel, copyright@aia.org.

§ 15.2.6.1 Either party may, within 30 days from the date of receipt of an initial decision, demand in writing that the other party file for mediation. If such a demand is made and the party receiving the demand fails to file for mediation within 30 days after receipt thereof, then both parties waive their rights to mediate or pursue binding dispute resolution proceedings with respect to the initial decision.

§ 15.2.7 In the event of a Claim against the Contractor, the Owner may, but is not obligated to, notify the surety, if any, of the nature and amount of the Claim. If the Claim relates to a possibility of a Contractor's default, the Owner may, but is not obligated to, notify the surety and request the surety's assistance in resolving the controversy.

§ 15.2.8 If a Claim relates to or is the subject of a mechanic's lien, the party asserting such Claim may proceed in accordance with applicable law to comply with the lien notice or filing deadlines.

§ 15.3 Mediation

§ 15.3.1 Claims, disputes, or other matters in controversy arising out of or related to the Contract, except those waived as provided for in Sections 9.10.4, 9.10.5, and 15.1.7, shall be subject to mediation as a condition precedent to binding dispute resolution.

§ 15.3.2 The parties shall endeavor to resolve their Claims by mediation which, unless the parties mutually agree otherwise, shall be administered by the American Arbitration Association in accordance with its Construction Industry Mediation Procedures in effect on the date of the Agreement. A request for mediation shall be made in writing, delivered to the other party to the Contract, and filed with the person or entity administering the mediation. The request may be made concurrently with the filing of binding dispute resolution proceedings but, in such event, mediation shall proceed in advance of binding dispute resolution proceedings, which shall be stayed pending mediation for a period of 60 days from the date of filing, unless stayed for a longer period by agreement of the parties or court order. If an arbitration is stayed pursuant to this Section 15.3.2, the parties may nonetheless proceed to the selection of the arbitrator(s) and agree upon a schedule for later proceedings.

§ 15.3.3 Either party may, within 30 days from the date that mediation has been concluded without resolution of the dispute or 60 days after mediation has been demanded without resolution of the dispute, demand in writing that the other party file for binding dispute resolution. If such a demand is made and the party receiving the demand fails to file for binding dispute resolution within 60 days after receipt thereof, then both parties waive their rights to binding dispute resolution proceedings with respect to the initial decision.

§ 15.3.4 The parties shall share the mediator's fee and any filing fees equally. The mediation shall be held in the place where the Project is located, unless another location is mutually agreed upon. Agreements reached in mediation shall be enforceable as settlement agreements in any court having jurisdiction thereof.

§ 15.4 Arbitration

§ 15.4.1 If the parties have selected arbitration as the method for binding dispute resolution in the Agreement, any Claim subject to, but not resolved by, mediation shall be subject to arbitration which, unless the parties mutually agree otherwise, shall be administered by the American Arbitration Association in accordance with its Construction Industry Arbitration Rules in effect on the date of the Agreement. The Arbitration shall be conducted in the place where the Project is located, unless another location is mutually agreed upon. A demand for arbitration shall be made in writing, delivered to the other party to the Contract, and filed with the person or entity administering the arbitration. The party filing a notice of demand for arbitration must assert in the demand all Claims then known to that party on which arbitration is permitted to be demanded.

§ 15.4.1.1 A demand for arbitration shall be made no earlier than concurrently with the filing of a request for mediation, but in no event shall it be made after the date when the institution of legal or equitable proceedings based on the Claim would be barred by the applicable statute of limitations. For statute of limitations purposes, receipt of a written demand for arbitration by the person or entity administering the arbitration shall constitute the institution of legal or equitable proceedings based on the Claim.

§ 15.4.2 The award rendered by the arbitrator or arbitrators shall be final, and judgment may be entered upon it in accordance with applicable law in any court having jurisdiction thereof.

§ 15.4.3 The foregoing agreement to arbitrate and other agreements to arbitrate with an additional person or entity duly

AIA Document A201™ – 2017. Copyright © 1911, 1915, 1918, 1925, 1937, 1951, 1958, 1961, 1963, 1966, 1970, 1976, 1987, 1997, 2007 and 2017 by The American Institute of Architects. **All rights reserved. WARNING: This AIA® Document is protected by U.S. Copyright Law and International Treaties. Unauthorized reproduction or distribution of this AIA® Document, or any portion of it, may result in severe civil and criminal penalties, and will be prosecuted to the maximum extent possible under the law.** To report copyright violations of AIA Contract Documents, e-mail The American Institute of Architects' legal counsel, copyright@aia.org.

consented to by parties to the Agreement, shall be specifically enforceable under applicable law in any court having jurisdiction thereof.

§ 15.4.4 Consolidation or Joinder

§ 15.4.4.1 Subject to the rules of the American Arbitration Association or other applicable arbitration rules, either party may consolidate an arbitration conducted under this Agreement with any other arbitration to which it is a party provided that (1) the arbitration agreement governing the other arbitration permits consolidation, (2) the arbitrations to be consolidated substantially involve common questions of law or fact, and (3) the arbitrations employ materially similar procedural rules and methods for selecting arbitrator(s).

§ 15.4.4.2 Subject to the rules of the American Arbitration Association or other applicable arbitration rules, either party may include by joinder persons or entities substantially involved in a common question of law or fact whose presence is required if complete relief is to be accorded in arbitration, provided that the party sought to be joined consents in writing to such joinder. Consent to arbitration involving an additional person or entity shall not constitute consent to arbitration of any claim, dispute or other matter in question not described in the written consent.

§ 15.4.4.3 The Owner and Contractor grant to any person or entity made a party to an arbitration conducted under this Section 15.4, whether by joinder or consolidation, the same rights of joinder and consolidation as those of the Owner and Contractor under this Agreement.

Sample

AIA Document A201™ – 2017. Copyright © 1911, 1915, 1918, 1925, 1937, 1951, 1958, 1961, 1963, 1966, 1970, 1976, 1987, 1997, 2007 and 2017 by The American Institute of Architects. **All rights reserved.** WARNING: This AIA® Document is protected by U.S. Copyright Law and International Treaties. Unauthorized reproduction or distribution of this AIA® Document, or any portion of it, may result in severe civil and criminal penalties, and will be prosecuted to the maximum extent possible under the law. To report copyright violations of AIA Contract Documents, e-mail The American Institute of Architects' legal counsel, copyright@aia.org.

DOCUMENT 00 4373 - PROPOSED SCHEDULE OF VALUES FORM

1.1 BID FORM SUPPLEMENT

A. A completed Proposed Schedule of Values form is required to be attached to the Bid Form.

1.2 PROPOSED SCHEDULE OF VALUES FORM

A. Proposed Schedule of Values Form: Provide a breakdown of the bid amount, including alternates, in enough detail to facilitate continued evaluation of bid. Coordinate with the Project Manual table of contents. Provide multiple line items for principal material and subcontract amounts. .

END OF DOCUMENT 00 4373

SECTION 01 1000 - SUMMARY

PART 1 - GENERAL

1.1 SUMMARY

A. Section Includes:

1. Project information.
2. Work covered by Contract Documents.
3. Phased construction.
4. Work under separate contracts.
5. Access to site.
6. Coordination with occupants.
7. Work Restrictions.
8. Specification and drawing conventions.
9. Miscellaneous provisions.

B. Related Requirements:

1. Section 01 5000 "Temporary Facilities and Controls" for limitations and procedures governing temporary use of Owner's facilities.

1.2 PROJECT INFORMATION

A. Project Identification: Daleville Town Center Apartments III

1. Project Location: Daleville, VA

B. Owner: Daleville Town Center Apartments III, LLC

1. Owner's Representative: Dylan Fox

C. Architect: Poole and Poole Architecture to provide architectural and engineering services and to serve as Project's constructor.

1.3 WORK COVERED BY CONTRACT DOCUMENTS

A. The Work of Project is defined by the Contract Documents and consists of the following:

1. Scope of work defines by list of drawings in Section 00 0115..

B. Type of Contract:

1. Project will be constructed under a single prime contract for each phase.

1.4 ACCESS TO SITE

A. General: Contractor shall have full use of Project site for construction operations during construction period. Contractor's use of Project site is limited only by Owner's right to perform work or to retain other contractors on portions of Project.

B. Use of Site: Limit use of Project site to areas within the contract limits indicated. Do not disturb portions of Project site beyond areas in which the Work is indicated.

1. Driveways, Walkways and Entrances: Keep driveways and entrances serving premises clear and available to Owner, Owner's employees, and emergency vehicles at all times. Do not use these areas for parking or storage of materials.
   a. Schedule deliveries to minimize use of driveways and entrances by construction operations.
   b. Schedule deliveries to minimize space and time requirements for storage of materials and equipment on-site.

1.5 SPECIFICATION AND DRAWING CONVENTIONS

A. Imperative mood and streamlined language are generally used in the Specifications. The words "shall," "shall be," or "shall comply with," depending on the context, are implied where a colon (:) is used within a sentence or phrase.

B. Drawing Coordination: Requirements for materials and products identified on Drawings are described in detail in the Specifications. One or more of the following are used on Drawings to identify materials and products:

1. Abbreviations: Materials and products are identified by abbreviations published as part of the U.S. National CAD Standard.
2. Keynoting: Materials and products are identified by reference keynotes referencing Specification Section numbers found in this Project Manual.

C. Terminology: Materials and products are identified by the typical generic terms used in the individual Specifications Sections.

PART 2 - PRODUCTS (Not Used)

PART 3 - EXECUTION (Not Used)

END OF SECTION 01 1000

SECTION 01 2600 - CONTRACT MODIFICATION PROCEDURES

PART 1 - GENERAL

1.1 SUMMARY

A. Section includes administrative and procedural requirements for handling and processing Contract modifications.

1.2 MINOR CHANGES IN THE WORK

A. Architect will issue supplemental instructions authorizing minor changes in the Work, not involving adjustment to the Contract Sum or the Contract Time .

1.3 PROPOSAL REQUESTS

A. Owner-Initiated Proposal Requests: Architect will issue a detailed description of proposed changes in the Work that may require adjustment to the Contract Sum or the Contract Time. If necessary, the description will include supplemental or revised Drawings and Specifications.

1. Work Change Proposal Requests issued by Architect are not instructions either to stop work in progress or to execute the proposed change.
2. Within 20 days, when not otherwise specified, after receipt of Proposal Request, submit a quotation estimating cost adjustments to the Contract Sum and the Contract Time necessary to execute the change.
   a. Include a list of quantities of products required or eliminated and unit costs, with total amount of purchases and credits to be made. If requested, furnish survey data to substantiate quantities.
   b. Indicate applicable taxes, delivery charges, equipment rental, and amounts of trade discounts.
   c. Include costs of labor and supervision directly attributable to the change.
   d. Include an updated Contractor's construction schedule that indicates the effect of the change, including, but not limited to, changes in activity duration, start and finish times, and activity relationship. Use available total float before requesting an extension of the Contract Time.
   e. Quotation Form: Use forms acceptable to Architect.

B. Contractor-Initiated Work Change Proposals: If latent or changed conditions require modifications to the Contract, Contractor may initiate a claim by submitting a request for a change to the Architect .

1. Include a statement outlining reasons for the change and the effect of the change on the Work. Provide a complete description of the proposed change. Indicate the effect of the proposed change on the Contract Sum and the Contract Time.

2. Include a list of quantities of products required or eliminated and unit costs, with total amount of purchases and credits to be made. If requested, furnish survey data to substantiate quantities.
3. Indicate applicable taxes, delivery charges, equipment rental, and amounts of trade discounts.
4. Include costs of labor and supervision directly attributable to the change.
5. Include an updated Contractor's construction schedule that indicates the effect of the change, including, but not limited to, changes in activity duration, start and finish times, and activity relationship. Use available total float before requesting an extension of the Contract Time.
6. Work Change Proposal Request Form: Use form acceptable to Architect.

PART 2 - PRODUCTS (Not Used)

PART 3 - EXECUTION (Not Used)

END OF SECTION 01 2600

SECTION 01 2900 - PAYMENT PROCEDURES

PART 1 - GENERAL

1.1 SUMMARY

A. Section includes administrative and procedural requirements necessary to prepare and process Applications for Payment.

1.2 SCHEDULE OF VALUES

A. Electronic media printout including equivalent information will be considered in lieu of standard form specified; submit sample to Architect for approval.

B. Formed filled out by hand will not be accepted.

1.3 APPLICATIONS FOR PROGRESS PAYMENT

A. Payment Period: Submit at intervals stipulated in the Agreement.

B. Execute certification by signature of authorized officer.

C. Submit One copy of each Application for Payment

1.4 MODIFICATION PROCEDURES

A. For minor changes not involving an adjustment to the Contract Price or Contract Time, Architect will issue instructions directly to Contractor.

B. For other changes, Architect will issue a document signed by the owner instructing Contractor to proceed with the change, for subsequent inclusion in a change order.

1. The document with describe the required changes and will designate method of determining any change in Contract Price or Contract Time
2. Promptly execute the change.

C. For changes for which advance pricing is desired, Architect will issue a document that includes a detained description of a proposed change with supplementary or revised drawings and specifications, a change in the Contract Time for executing the change with stipulation of any overtime work required and the period of time during which the requested price will be consider valid. Contractor shall prepare a submit fixed price quotation within seven days.

D. Computation of Change in Contract Amount: As specified in the Agreement and Conditions of the Contract.

E. Substantiation of Costs: Provide full information required for evaluation.

1. For Time and Material work, submit itemized account and supporting data after completion of change, with in time limit in Conditions of the Contract.

F. Execution of Change Orders: Architect will issue Change orders for signatures of parties as provided in the Conditions of Contract.

1.5 Application for final Payment

A. Prepare Application for Final Payment as specified for progress payments, identifying total adjusted Contract Price, previous payments, and sum remaining due.

PART 2 - PRODUCTS (Not Used)

PART 3 - EXECUTION (Not Used)

END OF SECTION 01 2900

SECTION 01 3100 - PROJECT MANAGEMENT AND COORDINATION

PART 1 - GENERAL

1.1 SUMMARY

A. Section includes administrative provisions for coordinating construction operations on Project including, but not limited to, the following:

1. Coordination drawings.
2. Requests for Information (RFIs).
3. Project meetings.

1.2 DEFINITIONS

A. RFI: Request from Owner, Architect, or Contractor seeking information required by or clarifications of the Contract Documents.

1.3 INFORMATIONAL SUBMITTALS

A. Subcontract List: Prepare a written summary identifying individuals or firms proposed for each portion of the Work, including those who are to furnish products or equipment fabricated to a special design. Include the following information in tabular form:

1. Number and title of related Specification Section(s) covered by subcontract.
2. Drawing number and detail references, as appropriate, covered by subcontract.

B. Name, address, and telephone number of entity performing subcontract or supplying products.

1.4 GENERAL COORDINATION PROCEDURES

A. Coordination: Coordinate construction operations included in different Sections of the Specifications to ensure efficient and orderly installation of each part of the Work. Coordinate construction operations included in different Sections that depend on each other for proper installation, connection, and operation.

1. Schedule construction operations in sequence required to obtain the best results where installation of one part of the Work depends on installation of other components, before or after its own installation.
2. Coordinate installation of different components to ensure maximum performance and accessibility for required maintenance, service, and repair.
3. Make adequate provisions to accommodate items scheduled for later installation.

B. Prepare memoranda for distribution to each party involved, outlining special procedures required for coordination. Include such items as required notices, reports, and list of attendees at meetings.

1. Prepare similar memoranda for Owner and separate contractors if coordination of their Work is required.

C. Administrative Procedures: Coordinate scheduling and timing of required administrative procedures with other construction activities to avoid conflicts and to ensure orderly progress of the Work. Such administrative activities include, but are not limited to, the following:

1. Preparation of Contractor's construction schedule.
2. Preparation of the schedule of values.
3. Installation and removal of temporary facilities and controls.
4. Delivery and processing of submittals.
5. Progress meetings.
6. Preinstallation conferences.
7. Project closeout activities.
8. Startup and adjustment of systems.

1.5 COORDINATION DRAWINGS

A. Coordination Drawings, General: Prepare coordination drawings according to requirements in individual Sections, and additionally where installation is not completely indicated on Shop Drawings, where limited space availability necessitates coordination, or if coordination is required to facilitate integration of products and materials fabricated or installed by more than one entity.

1. Content: Project-specific information, drawn accurately to a scale large enough to indicate and resolve conflicts. Do not base coordination drawings on standard printed data. Include the following information, as applicable:
   a. Indicate functional and spatial relationships of components of architectural, structural, civil, mechanical, and electrical systems.
   b. Indicate dimensions shown on Drawings. Specifically note dimensions that appear to be in conflict with submitted equipment and minimum clearance requirements. Provide alternative sketches to Architect indicating proposed resolution of such conflicts. Minor dimension changes and difficult installations will not be considered changes to the Contract.

B. Coordination Drawing Organization: Organize coordination drawings as follows:

1. Floor Plans and Reflected Ceiling Plans: Show architectural and structural elements, and mechanical, plumbing, fire-protection, fire-alarm, and electrical Work. Show locations of visible ceiling-mounted devices relative to acoustical ceiling grid. Supplement plan drawings with section drawings where required to adequately represent the Work.
2. Plenum Space: Indicate subframing for support of ceiling and wall systems, mechanical and electrical equipment, and related Work. Locate components within plenums to accommodate layout of light fixtures and other components indicated on Drawings. Indicate areas of conflict between light fixtures and other components.
3. Mechanical Rooms: Provide coordination drawings for mechanical rooms showing plans and elevations of mechanical, plumbing, fire-protection, fire-alarm, and electrical equipment.
4. Structural Penetrations: Indicate penetrations and openings required for all disciplines.

5. Slab Edge and Embedded Items: Indicate slab edge locations and sizes and locations of embedded items for metal fabrications, sleeves, anchor bolts, bearing plates, angles, door floor closers, slab depressions for floor finishes, curbs and housekeeping pads, and similar items.
6. Review: Architect will review coordination drawings to confirm that, in general, the Work is being coordinated, but not for the details of the coordination, which are Contractor's responsibility. If Architect determines that coordination drawings are not being prepared in sufficient scope or detail, or are otherwise deficient, Architect will so inform Contractor, who shall make suitable modifications and resubmit.

1.6 REQUEST FOR INFORMATION (RFI)

A. General: Immediately on discovery of the need for additional information, clarification, or interpretation of the Contract Documents, Contractor shall prepare and submit an RFI in the form specified.

1. Architect will return without response those RFIs submitted to Architect by other entities controlled by Contractor.
2. Coordinate and submit RFIs in a prompt manner so as to avoid delays in Contractor's work or work of subcontractors.

B. Content of the RFI: Include a detailed, legible description of item needing information or interpretation and the following:

1. Project Name.
2. Project number.
3. Date.
4. Name of Contractor
5. Name of Architect.
6. RFI number, numbered sequentially.
7. RFI subject.
8. Specification Section number and title and related paragraphs, as appropriate.
9. Drawing number and detail references, as appropriate.
10. Field dimensions and conditions, as appropriate.
11. Contractor's suggested resolution. If Contractor's suggested resolution impacts the Contract Time or the Contract Sum, Contractor shall state impact in the RFI.
12. Contractor's signature.
13. Attachments: Include sketches, descriptions, measurements, photos, Product Data, Shop Drawings, coordination drawings, and other information necessary to fully describe items needing interpretation.

C. RFI Forms: [**AIA Document G716**] .

D. Architect's Action: Architect will review each RFI, determine action required, and respond. Allow 7 working days for Architect's response for each RFI. RFIs received by Architect after 1:00 p.m. will be considered as received the following working day.

1. The following Contractor-generated RFIs will be returned without action:
   a. Requests for approval of submittals.
   b. Requests for approval of substitutions.

c. Requests for coordination information already indicated in the Contract Documents.
d. Requests for adjustments in the Contract Time or the Contract Sum.
e. Requests for interpretation of Architect's actions on submittals.
f. Incomplete RFIs or inaccurately prepared RFIs.

2. Architect's action may include a request for additional information, in which case Architect's time for response will date from time of receipt by Architect of additional information.
3. Architect's action on RFIs that may result in a change to the Contract Time or the Contract Sum may be eligible for Contractor to submit Change Proposal according to Section 01 2600 "Contract Modification Procedures."
   a. If Contractor believes the RFI response warrants change in the Contract Time or the Contract Sum, notify Architect in writing within 10 days of receipt of the RFI response.

1.7 PROJECT MEETINGS

A. General: Schedule and conduct meetings and conferences at Project site unless otherwise indicated.

1. Attendees: Inform participants and others involved, and individuals whose presence is required, of date and time of each meeting. Notify Owner and Architect of scheduled meeting dates and times.
2. Agenda: Prepare the meeting agenda. Distribute the agenda to all invited attendees.
3. Minutes: Entity responsible for conducting meeting will record significant discussions and agreements achieved. Distribute the meeting minutes to everyone concerned, including Owner, and Architect, within [3 days of the meeting.

B. Preconstruction Conference: Schedule and conduct a preconstruction conference before starting construction, at a time convenient to VHDA, Owner and Architect, but no later than [**15**] days after execution of the Agreement at VHDA office on closing day.

1. Attendees: Authorized representatives of VHDA, Owner, Architect, and their consultants; Contractor and its superintendent; major subcontractors; suppliers; and other concerned parties shall attend the conference. Participants at the conference shall be familiar with Project and authorized to conclude matters relating to the Work.
2. Agenda: Discuss items of significance that could affect progress, including the following:
   a. Tentative construction schedule.
   b. Phasing.
   c. Critical work sequencing and long lead items.
   d. Designation of key personnel and their duties.
   e. Procedures for processing field decisions and Change Orders.
   f. Procedures for RFIs.
   g. Procedures for testing and inspecting.
   h. Procedures for processing Applications for Payment.
   i. Distribution of the Contract Documents.
   j. Submittal procedures.
   k. Preparation of Record Documents.
   l. Use of the premises.
   m. Work restrictions.
   n. Working hours.

o. Owner's occupancy requirements.
p. Responsibility for temporary facilities and controls.
q. Procedures for moisture and mold control.
r. Procedures for disruptions and shutdowns.
s. Construction waste management and recycling.
t. Parking availability.
u. Office, work, and storage areas.
v. Equipment deliveries and priorities.
w. First aid.
x. Security.
y. Progress cleaning.

3. Minutes: Entity responsible for conducting meeting will record and distribute meeting minutes.

C. Preinstallation Conferences: Conduct a preinstallation conference at Project site before each construction activity when required by other sections and when required for coordination with other construction.

1. Attendees: Installer and representatives of manufacturers and fabricators involved in or affected by the installation and its coordination or integration with other materials and installations that have preceded or will follow, shall attend the meeting. Advise Architect of scheduled meeting dates.
2. Agenda: Review progress of other construction activities and preparations for the particular activity under consideration, including requirements for the following:
   a. Contract Documents.
   b. Options.
   c. Related RFIs.
   d. Related Change Orders.
   e. Purchases.
   f. Deliveries.
   g. Submittals.
   h. Sustainable design requirements.
   i. Review of mockups.
   j. Possible conflicts.
   k. Compatibility requirements.
   l. Time schedules.
   m. Weather limitations.
   n. Manufacturer's written instructions.
   o. Warranty requirements.
   p. Compatibility of materials.
   q. Acceptability of substrates.
   r. Temporary facilities and controls.
   s. Space and access limitations.
   t. Regulations of authorities having jurisdiction.
   u. Testing and inspecting requirements.
   v. Installation procedures.
   w. Coordination with other work.
   x. Required performance results.
   y. Protection of adjacent work.
   z. Protection of construction and personnel.

3. Record significant conference discussions, agreements, and disagreements, including required corrective measures and actions.
4. Reporting: Distribute minutes of the meeting to each party present and to other parties requiring information.
5. Do not proceed with installation if the conference cannot be successfully concluded. Initiate whatever actions are necessary to resolve impediments to performance of the Work and reconvene the conference at earliest feasible date.

D. Progress Meetings: Conduct progress meetings at regular intervals.

1. Attendees: In addition to representatives of HUD inspector, Owner and Architect, each contractor, subcontractor, supplier, and other entity concerned with current progress or involved in planning, coordination, or performance of future activities shall be represented at these meetings. All participants at the meeting shall be familiar with Project and authorized to conclude matters relating to the Work.
2. Agenda: Review and correct or approve minutes of previous progress meeting. Review other items of significance that could affect progress. Include topics for discussion as appropriate to status of Project.
   a. Contractor's Construction Schedule: Review progress since the last meeting. Determine whether each activity is on time, ahead of schedule, or behind schedule, in relation to Contractor's construction schedule. Determine how construction behind schedule will be expedited; secure commitments from parties involved to do so. Discuss whether schedule revisions are required to ensure that current and subsequent activities will be completed within the Contract Time.
      1) Review schedule for next period.
   b. Review present and future needs of each entity present, including the following:
      1) Interface requirements.
      2) Sequence of operations.
      3) Status of submittals.
      4) Deliveries.
      5) Off-site fabrication.
      6) Access.
      7) Site use.
      8) Temporary facilities and controls.
      9) Progress cleaning.
      10) Quality and work standards.
      11) Status of correction of deficient items.
      12) Field observations.
      13) Status of RFIs.
      14) Status of Proposal Requests.
      15) Pending changes.
      16) Status of Change Orders.
      17) Pending claims and disputes.
      18) Documentation of information for payment requests.
3. Minutes: Entity responsible for conducting the meeting will record and distribute the meeting minutes to each party present and to parties requiring information.
   a. Schedule Updating: Revise Contractor's construction schedule after each progress meeting where revisions to the schedule have been made or recognized. Issue revised schedule concurrently with the report of each meeting.

PART 2 - PRODUCTS (Not Used)

PART 3 - EXECUTION (Not Used)

END OF SECTION 01 3100

SECTION 01 3300 - SUBMITTAL PROCEDURES

PART 1 - GENERAL

1.1 SUMMARY

A. Section Includes:

1. Submittal schedule requirements.
2. Administrative and procedural requirements for submittals.

1.2 DEFINITIONS

A. Action Submittals: Written and graphic information and physical samples that require Architect's and Construction Manager's responsive action. Action submittals are those submittals indicated in individual Specification Sections as "action submittals."

B. Informational Submittals: Written and graphic information and physical samples that do not require Architect's and Construction Manager's responsive action. Submittals may be rejected for not complying with requirements. Informational submittals are those submittals indicated in individual Specification Sections as "informational submittals."

1.3 SUBMITTAL SCHEDULE

A. Submittal Schedule: Submit, as an action submittal, a list of submittals, arranged in chronological order by dates required by construction schedule. Include time required for review, ordering, manufacturing, fabrication, and delivery when establishing dates. Include additional time required for making corrections or revisions to submittals noted by Architect and Construction Manager and additional time for handling and reviewing submittals required by those corrections.

1.4 SUBMITTAL FORMATS

A. Submittal Information: Include the following information in each submittal:

1. Project name.
2. Date.
3. Name of Architect.
4. Name of Construction Manager.
5. Name of Contractor.
6. Name of firm or entity that prepared submittal.
7. Names of subcontractor, manufacturer, and supplier.
8. Unique submittal number, including revision identifier. Include Specification Section number with sequential alphanumeric identifier; and alphanumeric suffix for resubmittals.
9. Category and type of submittal.
10. Submittal purpose and description.

11. Number and title of Specification Section, with paragraph number and generic name for each of multiple items.
12. Drawing number and detail references, as appropriate.
13. Indication of full or partial submittal.
14. Location(s) where product is to be installed, as appropriate.
15. Other necessary identification.
16. Remarks.
17. Signature of transmitter.

B. Options: Identify options requiring selection by Architect.

C. Deviations and Additional Information: On each submittal, clearly indicate deviations from requirements in the Contract Documents, including minor variations and limitations; include relevant additional information and revisions, other than those requested by Architect and Construction Manager on previous submittals. Indicate by highlighting on each submittal or noting on attached separate sheet.

D. Paper Submittals:

1. Place a permanent label or title block on each submittal item for identification; include name of firm or entity that prepared submittal.
2. Provide a space approximately 6 by 8 inches on label or beside title block to record Contractor's review and approval markings and action taken by Architect and Construction Manager.
3. Action Submittals: Submit three paper copies of each submittal or one electronic copy unless otherwise indicated. Architect will return two copies.
4. Informational Submittals: Submit two paper copies or one electronic copy of each submittal unless otherwise indicated. Architect will not return copies.
5. Transmittal for Submittals: Assemble each submittal individually and appropriately for transmittal and handling. Transmit each submittal using AIA Document G810 transmittal form.

E. Electronic Submittals: Prepare submittals as PDF package, incorporating complete information into each PDF file. Name PDF file with submittal number.

F. Submittals for Utilizing Web-Based Project Management Software: Prepare submittals as PDF files, or other format indicated by Project management software.

1.5 SUBMITTAL PROCEDURES

A. Prepare and submit submittals required by individual Specification Sections. Types of submittals are indicated in individual Specification Sections.

1. Email: Prepare submittals as PDF package, and transmit to Architect by sending via email. Include PDF transmittal form. Include information in email subject line as requested by Architect.
2. Web-Based Project Management Software: Prepare submittals in PDF form, and upload to web-based Project management software website. Enter required data in web-based software site to fully identify submittal.
3. Paper: Prepare submittals in paper form, and deliver to Architect.

B. Coordination: Coordinate preparation and processing of submittals with performance of construction activities.

1. Coordinate each submittal with fabrication, purchasing, testing, delivery, other submittals, and related activities that require sequential activity.
2. Submit all submittal items required for each Specification Section concurrently unless partial submittals for portions of the Work are indicated on approved submittal schedule.
3. Submit action submittals and informational submittals required by the same Specification Section as separate packages under separate transmittals.

C. Processing Time: Allow time for submittal review, including time for resubmittals, as follows. Time for review shall commence on Architect's receipt of submittal. No extension of the Contract Time will be authorized because of failure to transmit submittals enough in advance of the Work to permit processing, including resubmittals.

1. Initial Review: Allow 15 days for initial review of each submittal. Allow additional time if coordination with subsequent submittals is required. Architect will advise Contractor when a submittal being processed must be delayed for coordination.
2. Resubmittal Review: Allow 15 days for review of each resubmittal.

D. Resubmittals: Make resubmittals in same form and number of copies as initial submittal.

E. Distribution: Furnish copies of final submittals to manufacturers, subcontractors, suppliers, fabricators, installers, authorities having jurisdiction, and others as necessary for performance of construction activities. Show distribution on transmittal forms.

F. Use for Construction: Retain complete copies of submittals on Project site. Use only final action submittals that are marked with approval notation from Architect's action stamp.

1.6 SUBMITTAL REQUIREMENTS

A. Product Data: Collect information into a single submittal for each element of construction and type of product or equipment.

1. If information must be specially prepared for submittal because standard published data are unsuitable for use, submit as Shop Drawings, not as Product Data.
2. Mark each copy of each submittal to show which products and options are applicable.
3. Include the following information, as applicable:
   a. Manufacturer's catalog cuts.
   b. Manufacturer's product specifications.
   c. Standard color charts.
   d. Statement of compliance with specified referenced standards.
   e. Testing by recognized testing agency.
   f. Application of testing agency labels and seals.
   g. Notation of coordination requirements.
   h. Availability and delivery time information.
4. For equipment, include the following in addition to the above, as applicable:
   a. Wiring diagrams that show factory-installed wiring.
   b. Printed performance curves.
   c. Operational range diagrams.

d. Clearances required to other construction, if not indicated on accompanying Shop Drawings.

5. Submit Product Data before Shop Drawings, and before or concurrent with Samples.

B. Shop Drawings: Prepare Project-specific information, drawn accurately to scale. Do not base Shop Drawings on reproductions of the Contract Documents or standard printed data unless submittal based on Architect's digital data drawing files is otherwise permitted.

1. Preparation: Fully illustrate requirements in the Contract Documents. Include the following information, as applicable:
   a. Identification of products.
   b. Schedules.
   c. Compliance with specified standards.
   d. Notation of coordination requirements.
   e. Notation of dimensions established by field measurement.
   f. Relationship and attachment to adjoining construction clearly indicated.
   g. Seal and signature of professional engineer if specified.
2. Paper Sheet Size: Except for templates, patterns, and similar full-size Drawings, submit Shop Drawings on sheets at least 8-1/2 by 11 inches , but no larger than 30 by 42 inches
   a. Two opaque (bond) copies of each submittal. Architect will return 1 copy

C. Samples: Submit Samples for review of kind, color, pattern, and texture for a check of these characteristics with other materials.

1. Transmit Samples that contain multiple, related components such as accessories together in one submittal package.
2. Identification: Permanently attach label on unexposed side of Samples that includes the following:
   a. Project name and submittal number.
   b. Generic description of Sample.
   c. Product name and name of manufacturer.
   d. Sample source.
   e. Number and title of applicable Specification Section.
   f. Specification paragraph number and generic name of each item.
3. Email Transmittal: Provide PDF transmittal. Include digital image file illustrating Sample characteristics, and identification information for record.
4. Web-Based Project Management Software: Prepare submittals in PDF form, and upload to web-based Project software website. Enter required data in web-based software site to fully identify submittal.
5. Paper Transmittal: Include paper transmittal including complete submittal information indicated.
6. Disposition: Maintain sets of approved Samples at Project site, available for quality-control comparisons throughout the course of construction activity. Sample sets may be used to determine final acceptance of construction associated with each set.
   a. Samples that may be incorporated into the Work are indicated in individual Specification Sections. Such Samples must be in an undamaged condition at time of use.
   b. Samples not incorporated into the Work, or otherwise designated as Owner's property, are the property of Contractor.
7. Samples for Initial Selection: Submit manufacturer's color charts consisting of units or sections of units showing the full range of colors, textures, and patterns available.

a. Number of Samples: Submit one full set(s) of available choices where color, pattern, texture, or similar characteristics are required to be selected from manufacturer's product line. Architect will return submittal with options selected.

8. Samples for Verification: Submit full-size units or Samples of size indicated, prepared from same material to be used for the Work, cured and finished in manner specified, and physically identical with material or product proposed for use, and that show full range of color and texture variations expected. Samples include, but are not limited to, the following: partial sections of manufactured or fabricated components; small cuts or containers of materials; complete units of repetitively used materials; swatches showing color, texture, and pattern; color range sets; and components used for independent testing and inspection.
   a. Number of Samples: Submit three sets of Samples. Architect will retain two Sample sets; remainder will be returned.
      1) Submit a single Sample where assembly details, workmanship, fabrication techniques, connections, operation, and other similar characteristics are to be demonstrated.
      2) If variation in color, pattern, texture, or other characteristic is inherent in material or product represented by a Sample, submit at least three sets of paired units that show approximate limits of variations.

D. Product Schedule: As required in individual Specification Sections, prepare a written summary indicating types of products required for the Work and their intended location. Include the following information in tabular form:

E. Qualification Data: Prepare written information that demonstrates capabilities and experience of firm or person. Include lists of completed projects with project names and addresses, contact information of architects and owners, and other information specified.

F. Design Data: Prepare and submit written and graphic information indicating compliance with indicated performance and design criteria in individual Specification Sections. Include list of assumptions and summary of loads. Include load diagrams if applicable. Provide name and version of software, if any, used for calculations. Number each page of submittal.

G. Certificates:

1. Certificates and Certifications Submittals: Submit a statement that includes signature of entity responsible for preparing certification. Certificates and certifications shall be signed by an officer or other individual authorized to sign documents on behalf of that entity. Provide a notarized signature where indicated.
2. Installer Certificates: Submit written statements on manufacturer's letterhead certifying that Installer complies with requirements in the Contract Documents and, where required, is authorized by manufacturer for this specific Project.
3. Manufacturer Certificates: Submit written statements on manufacturer's letterhead certifying that manufacturer complies with requirements in the Contract Documents. Include evidence of manufacturing experience where required.
4. Material Certificates: Submit written statements on manufacturer's letterhead certifying that material complies with requirements in the Contract Documents.
5. Product Certificates: Submit written statements on manufacturer's letterhead certifying that product complies with requirements in the Contract Documents.
6. Welding Certificates: Prepare written certification that welding procedures and personnel comply with requirements in the Contract Documents. Submit record of Welding

Procedure Specification and Procedure Qualification Record on AWS forms. Include names of firms and personnel certified.

H. Test and Research Reports:

1. Compatibility Test Reports: Submit reports written by a qualified testing agency, on testing agency's standard form, indicating and interpreting results of compatibility tests performed before installation of product. Include written recommendations for substrate preparation and primers required.
2. Field Test Reports: Submit written reports indicating and interpreting results of field tests performed either during installation of product or after product is installed in its final location, for compliance with requirements in the Contract Documents.
3. Material Test Reports: Submit reports written by a qualified testing agency, on testing agency's standard form, indicating and interpreting test results of material for compliance with requirements in the Contract Documents.
4. Preconstruction Test Reports: Submit reports written by a qualified testing agency, on testing agency's standard form, indicating and interpreting results of tests performed before installation of product, for compliance with performance requirements in the Contract Documents.
5. Product Test Reports: Submit written reports indicating that current product produced by manufacturer complies with requirements in the Contract Documents. Base reports on evaluation of tests performed by manufacturer and witnessed by a qualified testing agency, or on comprehensive tests performed by a qualified testing agency.
6. Research Reports: Submit written evidence, from a model code organization acceptable to authorities having jurisdiction, that product complies with building code in effect for Project. Include the following information:
   a. Name of evaluation organization.
   b. Date of evaluation.
   c. Time period when report is in effect.
   d. Product and manufacturers' names.
   e. Description of product.
   f. Test procedures and results.
   g. Limitations of use.

1.7 DELEGATED DESIGN SERVICES

A. Performance and Design Criteria: Where professional design services or certifications by a design professional are specifically required of Contractor by the Contract Documents, provide products and systems complying with specific performance and design criteria indicated.

1. If criteria indicated are insufficient to perform services or certification required, submit a written request for additional information to Architect.

B. Delegated Design Services Certification: In addition to Shop Drawings, Product Data, and other required submittals, submit digitally signed PDF file copies of certificate, signed and sealed by the responsible design professional, for each product and system specifically assigned to Contractor to be designed or certified by a design professional.

1. Indicate that products and systems comply with performance and design criteria in the Contract Documents. Include list of codes, loads, and other factors used in performing these services.

1.8 CONTRACTOR'S REVIEW

A. Action Submittals and Informational Submittals: Review each submittal and check for coordination with other Work of the Contract and for compliance with the Contract Documents. Note corrections and field dimensions. Mark with approval stamp before submitting to Architect [**and Construction Manager**].

B. Contractor's Approval: Indicate Contractor's approval for each submittal with [**a uniform approval stamp**] [**indication in web-based Project management software**]. Include name of reviewer, date of Contractor's approval, and statement certifying that submittal has been reviewed, checked, and approved for compliance with the Contract Documents.

1. Architect [**and Construction Manager**] will not review submittals received from Contractor that do not have Contractor's review and approval.

1.9 ARCHITECT'S REVIEW

A. Action Submittals: Architect will review each submittal, indicate corrections or revisions required

1. PDF Submittals: Architect will indicate, via markup on each submittal, the appropriate action.
2. Paper Submittals: Architect will stamp each submittal with an action stamp and will mark stamp appropriately to indicate action .
3. Submittals by Web-Based Project Management Software: Architect will indicate, on Project management software website, the appropriate action.

B. Informational Submittals: Architect will review each submittal and will not return it, or will return it if it does not comply with requirements. Architect will forward each submittal to appropriate party.

C. Partial submittals prepared for a portion of the Work will be reviewed when use of partial submittals has received prior approval from Architect.

D. Incomplete submittals are unacceptable, will be considered nonresponsive, and will be returned for resubmittal without review.

E. Architect will return without review submittals received from sources other than Contractor.

F. Submittals not required by the Contract Documents will be returned by Architect without action.

PART 2 - PRODUCTS (Not Used)

PART 3 - EXECUTION (Not Used)

END OF SECTION 01 3300

SECTION 01 4000 - QUALITY REQUIREMENTS

PART 1 - GENERAL

1.1 SUMMARY

A. Section includes administrative and procedural requirements for quality assurance and quality control.

B. Testing and inspection services are required to verify compliance with requirements specified or indicated. These services do not relieve Contractor of responsibility for compliance with the Contract Document requirements.

1. Specified tests, inspections, and related actions do not limit Contractor's other quality-assurance and quality-control procedures that facilitate compliance with the Contract Document requirements.
2. Requirements for Contractor to provide quality-assurance and quality-control services required by Architect, Owner, or authorities having jurisdiction are not limited by provisions of this Section.
3. Specific test and inspection requirements are not specified in this Section.

1.2 DEFINITIONS

A. Quality-Assurance Services: Activities, actions, and procedures performed before and during execution of the Work to guard against defects and deficiencies and substantiate that proposed construction will comply with requirements.

B. Quality-Control Services: Tests, inspections, procedures, and related actions during and after execution of the Work to evaluate that actual products incorporated into the Work and completed construction comply with requirements. Services do not include contract enforcement activities performed by Architect.

C. Mockups: Full-size physical assemblies that are constructed on-site. Mockups are constructed to verify selections made under Sample submittals; to demonstrate aesthetic effects and, where indicated, qualities of materials and execution; to review coordination, testing, or operation; to show interface between dissimilar materials; and to demonstrate compliance with specified installation tolerances. Mockups are not Samples. Unless otherwise indicated, approved mockups establish the standard by which the Work will be judged.

1. Laboratory Mockups: Full-size physical assemblies constructed at testing facility to verify performance characteristics.

D. Preconstruction Testing: Tests and inspections performed specifically for Project before products and materials are incorporated into the Work, to verify performance or compliance with specified criteria.

E. Product Tests: Tests and inspections that are performed an NRTL, an NVLAP, or by a testing agency qualified to conduct product testing and acceptable to authorities having jurisdiction, to establish product performance and compliance with specified requirements.

F. Source Quality-Control Tests and Inspections: Tests and inspections that are performed at the source; for example, plant, mill, factory, or shop.

G. Field Quality-Control Testing: Tests and inspections that are performed on-site for installation of the Work and for completed Work.

H. Testing Agency: An entity engaged to perform specific tests, inspections, or both. The term "testing laboratory" has the same meaning as the term "testing agency."

I. Installer/Applicator/Erector: Contractor or another entity engaged by Contractor as an employee, Subcontractor, or Sub-subcontractor, to perform a particular construction operation, including installation, erection, application, and similar operations.

1. Experienced: When used with an entity or individual, "experienced" means having successfully completed a minimum of 5 previous projects similar in nature, size, and extent to this Project; being familiar with special requirements indicated; and having complied with requirements of authorities having jurisdiction.

1.3 CONFLICTING REQUIREMENTS

A. Referenced Standards: If compliance with two or more standards or requirements is specified and the standards or requirements establish different or conflicting requirements for minimum quantities or quality levels, inform the Architect regarding the conflict and obtain clarification prior to proceeding with the Work. Refer conflicting requirements that are different, but apparently equal, to Architect for clarification before proceeding.

B. Minimum Quantity or Quality Levels: The quantity or quality level shown or specified is the minimum provided or performed. The actual installation may comply exactly with the minimum quantity or quality specified, or it may exceed the minimum within reasonable limits. To comply with these requirements, indicated numeric values are minimum or maximum, as appropriate, for the context of requirements. Refer uncertainties to Architect for a decision before proceeding.

1.4 INFORMATIONAL SUBMITTALS

A. Contractor's Statement of Responsibility: When required by authorities having jurisdiction, submit copy of written statement of responsibility submitted to authorities having jurisdiction before starting work on the following systems:

1. Seismic-force-resisting system, designated seismic system, or component listed in the Statement of Special Inspections.
2. Main wind-force-resisting system or a wind-resisting component listed in the Statement of Special Inspections.

B. Testing Agency Qualifications: For testing agencies specified in "Quality Assurance" Article to demonstrate their capabilities and experience. Include proof of qualifications in the form of a recent report on the inspection of the testing agency by a recognized authority.

1.5 REPORTS AND DOCUMENTS

A. Test and Inspection Reports: Prepare and submit certified written reports specified in other Sections. Include the following:

1. Date of issue.
2. Project title and number.
3. Name, address, telephone number, and email address of testing agency.
4. Dates and locations of samples and tests or inspections.
5. Names of individuals making tests and inspections.
6. Description of the Work and test and inspection method.
7. Identification of product and Specification Section.
8. Complete test or inspection data.
9. Test and inspection results and an interpretation of test results.
10. Record of temperature and weather conditions at time of sample taking and testing and inspection.
11. Comments or professional opinion on whether tested or inspected Work complies with the Contract Document requirements.
12. Name and signature of laboratory inspector.
13. Recommendations on retesting and reinspecting.

B. Manufacturer's Field Reports: Prepare written information documenting manufacturer's technical representative's tests and inspections specified in other Sections. Include the following:

1. Name, address, and telephone number of representative making report.
2. Statement on condition of substrates and their acceptability for installation of product.
3. Summary of installation procedures being followed, whether they comply with requirements and, if not, what corrective action was taken.
4. Results of operational and other tests and a statement of whether observed performance complies with requirements.
5. Other required items indicated in individual Specification Sections.

C. Permits, Licenses, and Certificates: For Owner's records, submit copies of permits, licenses, certifications, inspection reports, releases, jurisdictional settlements, notices, receipts for fee payments, judgments, correspondence, records, and similar documents, established for compliance with standards and regulations bearing on performance of the Work.

1.6 QUALITY ASSURANCE

A. General: Qualifications paragraphs in this article establish the minimum qualification levels required; individual Specification Sections specify additional requirements.

B. Manufacturer Qualifications: A firm experienced in manufacturing products or systems similar to those indicated for this Project and with a record of successful in-service performance, as well as sufficient production capacity to produce required units. As applicable, procure products from

manufacturers able to meet qualification requirements, warranty requirements, and technical or factory-authorized service representative requirements.

C. Fabricator Qualifications: A firm experienced in producing products similar to those indicated for this Project and with a record of successful in-service performance, as well as sufficient production capacity to produce required units.

D. Installer Qualifications: A firm or individual experienced in installing, erecting, applying, or assembling work similar in material, design, and extent to that indicated for this Project, whose work has resulted in construction with a record of successful in-service performance.

E. Professional Engineer Qualifications: A professional engineer who is legally qualified to practice in jurisdiction where Project is located and who is experienced in providing engineering services of the kind indicated. Engineering services are defined as those performed for installations of the system, assembly, or product that are similar in material, design, and extent to those indicated for this Project.

F. Specialists: Certain Specification Sections require that specific construction activities be performed by entities who are recognized experts in those operations. Specialists will satisfy qualification requirements indicated and engage in the activities indicated.

1. Requirements of authorities having jurisdiction supersede requirements for specialists.

G. Testing Agency Qualifications: An NRTL, an NVLAP, or an independent agency with the experience and capability to conduct testing and inspection indicated, as documented according to ASTM E329 ; and with additional qualifications specified in individual Sections; and, where required by authorities having jurisdiction, that is acceptable to authorities.

1. NRTL: A nationally recognized testing laboratory according to 29 CFR 1910.7.
2. NVLAP: A testing agency accredited according to NIST's National Voluntary Laboratory Accreditation Program.

H. Manufacturer's Representative Qualifications: An authorized representative of manufacturer who is trained and approved by manufacturer to observe and inspect installation of manufacturer's products that are similar in material, design, and extent to those indicated for this Project.

I. Preconstruction Testing: Where testing agency is indicated to perform preconstruction testing for compliance with specified requirements for performance and test methods, comply with the following:

1. Contractor responsibilities include the following:
   a. Provide test specimens representative of proposed products and construction.
   b. Submit specimens in a timely manner with sufficient time for testing and analyzing results to prevent delaying the Work.
   c. Build laboratory mockups at testing facility using personnel, products, and methods of construction indicated for the completed Work.
   d. When testing is complete, remove test specimens and test assemblies, mockups; do not reuse products on Project.
2. Testing Agency Responsibilities: Submit a certified written report of each test, inspection, and similar quality-assurance service to Architect , with copy to Contractor. Interpret tests

and inspections and state in each report whether tested and inspected work complies with or deviates from the Contract Documents.

J. Mockups: Before installing portions of the Work requiring mockups, build mockups for each form of construction and finish required to comply with the following requirements, using materials indicated for the completed Work:

1. Build mockups in location and size indicated or, if not indicated, as directed by Architect.
2. Notify Architect 7 days in advance of dates and times when mockups will be constructed.
3. Demonstrate the proposed range of aesthetic effects and workmanship.
4. Obtain Architect's approval of mockups before starting work, fabrication, or construction.
   a. Allow 7 days for initial review and each re-review of each mockup.
5. Maintain mockups during construction in an undisturbed condition as a standard for judging the completed Work.
6. Demolish and remove mockups when directed unless otherwise indicated.

K. Laboratory Mockups: Comply with requirements of preconstruction testing and those specified in individual Specification Sections.

1.7 QUALITY CONTROL

A. Owner Responsibilities: Where quality-control services are indicated as Owner's responsibility, Owner will engage a qualified testing agency to perform these services.

1. Owner will furnish Contractor with names, addresses, and telephone numbers of testing agencies engaged and a description of types of testing and inspection they are engaged to perform.
2. Costs for retesting and reinspecting construction that replaces or is necessitated by Work that failed to comply with the Contract Documents will be charged to Contractor.

B. Contractor Responsibilities: Tests and inspections not explicitly assigned to Owner are Contractor's responsibility. Perform additional quality-control activities, whether specified or not, to verify and document that the Work complies with requirements.

1. Where services are indicated as Contractor's responsibility, engage a qualified testing agency to perform these quality-control services.
   a. Contractor will not employ same entity engaged by Owner, unless agreed to in writing by Owner.
2. Notify testing agencies at least [**24**] hours in advance of time when Work that requires testing or inspection will be performed.
3. Where quality-control services are indicated as Contractor's responsibility, submit a certified written report, in duplicate, of each quality-control service.
4. Testing and inspection requested by Contractor and not required by the Contract Documents are Contractor's responsibility.
5. Submit additional copies of each written report directly to authorities having jurisdiction, when they so direct.

C. Manufacturer's Field Services: Where indicated, engage a manufacturer's representative to observe and inspect the Work. Manufacturer's representative's services include examination of

substrates and conditions, verification of materials, inspection of completed portions of the Work, and submittal of written reports.

D. Retesting/Reinspecting: Regardless of whether original tests or inspections were Contractor's responsibility, provide quality-control services, including retesting and reinspecting, for construction that replaced Work that failed to comply with the Contract Documents.

E. Testing Agency Responsibilities: Cooperate with Architect and Contractor in performance of duties. Provide qualified personnel to perform required tests and inspections.

1. Determine the location from which test samples will be taken and in which in-situ tests are conducted.
2. Conduct and interpret tests and inspections and state in each report whether tested and inspected work complies with or deviates from requirements.
3. Submit a certified written report, in duplicate, of each test, inspection, and similar quality-control service through Contractor.
4. Do not release, revoke, alter, or increase the Contract Document requirements or approve or accept any portion of the Work.
5. Do not perform any duties of Contractor.

F. Notify Architect and Contractor promptly of irregularities or deficiencies observed in the Work during performance of its services.

G. Associated Services: Cooperate with agencies performing required tests, inspections, and similar quality-control services, and provide reasonable auxiliary services as requested. Notify agency sufficiently in advance of operations to permit assignment of personnel. Provide the following:

1. Access to the Work.
2. Incidental labor and facilities necessary to facilitate tests and inspections.
3. Adequate quantities of representative samples of materials that require testing and inspecting. Assist agency in obtaining samples.
4. Facilities for storage and field curing of test samples.
5. Delivery of samples to testing agencies.
6. Preliminary design mix proposed for use for material mixes that require control by testing agency.
7. Security and protection for samples and for testing and inspecting equipment at Project site.

H. Coordination: Coordinate sequence of activities to accommodate required quality-assurance and quality-control services with a minimum of delay and to avoid necessity of removing and replacing construction to accommodate testing and inspection.

1. Schedule times for tests, inspections, obtaining samples, and similar activities.

PART 2 - PRODUCTS (Not Used)

PART 3 - EXECUTION

3.1 TEST AND INSPECTION LOG

A. Test and Inspection Log: Prepare a record of tests and inspections. Include the following:

1. Date test or inspection was conducted.
2. Description of the Work tested or inspected.
3. Date test or inspection results were transmitted to Architect.
4. Identification of testing agency or special inspector conducting test or inspection.

B. Maintain log at Project site. Post changes and revisions as they occur. Provide access to test and inspection log for Architect's reference during normal working hours.

3.2 REPAIR AND PROTECTION

A. General: On completion of testing, inspection, sample taking, and similar services, repair damaged construction and restore substrates and finishes.

1. Provide materials and comply with installation requirements specified in other Specification Sections or matching existing substrates and finishes. Restore patched areas and extend restoration into adjoining areas with durable seams that are as invisible as possible. Comply with the Contract Document requirements for cutting and patching in Section 01 7300 "Execution."

B. Protect construction exposed by or for quality-control service activities.

C. Repair and protection are Contractor's responsibility, regardless of the assignment of responsibility for quality-control services.

END OF SECTION 01 4000

SECTION 01 5000 - TEMPORARY FACILITIES AND CONTROLS

PART 1 - GENERAL

1.1 SUMMARY

A. Section includes requirements for temporary utilities, support facilities, and security and protection facilities.

B. Related Requirements:

1. Section 01 1000 "Summary" for work restrictions and limitations on utility interruptions.

1.2 USE CHARGES

A. General: Installation, removal, and use charges for temporary facilities shall be included in the Contract Sum unless otherwise indicated. Allow other entities engaged in the Project to use temporary services and facilities without cost.

B. Water and Sewer Service from Existing System: Water from Owner's existing water system is available for use. Provide connections and extensions of services as required for construction operations.

C. Electric Power Service from Existing System: Electric power from Owner's existing system is available for use. Provide connections and extensions of services as required for construction operations.

1.3 INFORMATIONAL SUBMITTALS

A. Site Plan: Show temporary facilities, temporary utility lines and connections, staging areas, construction site entrances, vehicle circulation, and parking areas for construction personnel.

B. Erosion- and Sedimentation-Control Plan: Show compliance with requirements of EPA Construction General Permit or authorities having jurisdiction, whichever is more stringent.

C. Fire-Safety Program: Show compliance with requirements of NFPA 241 and authorities having jurisdiction. Indicate Contractor personnel responsible for management of fire-prevention program.

1.4 QUALITY ASSURANCE

A. Electric Service: Comply with NECA, NEMA, and UL standards and regulations for temporary electric service. Install service to comply with NFPA 70.

B. Tests and Inspections: Arrange for authorities having jurisdiction to test and inspect each temporary utility before use. Obtain required certifications and permits.

C. Accessible Temporary Egress: Comply with applicable provisions in the United States Access Board's ADA-ABA Accessibility Guidelines and ICC/ANSI A117.1.

1.5 PROJECT CONDITIONS

A. Temporary Use of Permanent Facilities: Engage Installer of each permanent service to assume responsibility for operation, maintenance, and protection of each permanent service during its use as a construction facility before Owner's acceptance, regardless of previously assigned responsibilities.

PART 2 - PRODUCTS

2.1 MATERIALS

A. Provide 6 foot high fence around construction site; equip with vehicular and pedestrian gates and locks

2.2 TEMPORARY FACILITIES

A. Field Offices: Prefabricated or mobile units with serviceable finishes, temperature controls, and foundations adequate for normal loading.

B. Common-Use Field Office: Of sufficient size to accommodate needs of Owner, Architect, and construction personnel office activities and to accommodate Project meetings specified in other Division 01 Sections. Keep office clean and orderly.

C. Storage and Fabrication Sheds: Provide sheds sized, furnished, and equipped to accommodate materials and equipment for construction operations.

2.3 EQUIPMENT

A. Fire Extinguishers: Portable, UL rated; with class and extinguishing agent as required by locations and classes of fire exposures.

B. HVAC Equipment: Unless Owner authorizes use of permanent HVAC system, provide vented, self-contained, liquid-propane-gas or fuel-oil heaters with individual space thermostatic control.

1. Use of gasoline-burning space heaters, open-flame heaters, or salamander-type heating units is prohibited.
2. Heating Units: Listed and labeled for type of fuel being consumed, by a qualified testing agency acceptable to authorities having jurisdiction, and marked for intended location and application.

PART 3 - EXECUTION

END OF SECTION 01 5000

SECTION 01 6000 - PRODUCT REQUIREMENTS

PART 1 - GENERAL

1.1 SUMMARY

A. Section includes administrative and procedural requirements for selection of products for use in Project; product delivery, storage, and handling; manufacturers' standard warranties on products; special warranties; and comparable products.

1.2 DEFINITIONS

A. Products: Items obtained for incorporating into the Work, whether purchased for Project or taken from previously purchased stock. The term "product" includes the terms "material," "equipment," "system," and terms of similar intent.

1. Named Products: Items identified by manufacturer's product name, including make or model number or other designation shown or listed in manufacturer's published product literature that is current as of date of the Contract Documents.
2. New Products: Items that have not previously been incorporated into another project or facility. Salvaged items or items reused from other projects are not considered new products. Items that are manufactured or fabricated to include recycled content materials are considered new products, unless indicated otherwise.
3. Comparable Product: Product by named manufacturer that is demonstrated and approved through the comparable product submittal process described in Part 2 "Comparable Products" Article, to have the indicated qualities related to type, function, dimension, in-service performance, physical properties, appearance, and other characteristics that equal or exceed those of specified product.

B. Basis-of-Design Product Specification: A specification in which a single manufacturer's product is named and accompanied by the words "basis-of-design product," including make or model number or other designation. Published attributes and characteristics of basis-of-design product establish salient characteristics of products.

1.3 ACTION SUBMITTALS

A. Comparable Product Requests: Submit request for consideration of each comparable product. Identify product or fabrication or installation method to be replaced. Include Specification Section number and title and Drawing numbers and titles.

1. Architect's Action: If necessary, Architect will request additional information or documentation for evaluation within one week of receipt of a comparable product request. Architect will notify Contractor of approval or rejection of proposed comparable product request within 15 days of receipt of request, or 7 days of receipt of additional information or documentation, whichever is later.

a. Use product specified if Architect does not issue a decision on use of a comparable product request within time allocated.

1.4 QUALITY ASSURANCE

A. Compatibility of Options: If Contractor is given option of selecting between two or more products for use on Project, select product compatible with products previously selected, even if previously selected products were also options.

1.5 PRODUCT DELIVERY, STORAGE, AND HANDLING

A. Deliver, store, and handle products, using means and methods that will prevent damage, deterioration, and loss, including theft and vandalism. Comply with manufacturer's written instructions.

B. Delivery and Handling:

1. Schedule delivery to minimize long-term storage at Project site and to prevent overcrowding of construction spaces.
2. Coordinate delivery with installation time to ensure minimum holding time for items that are flammable, hazardous, easily damaged, or sensitive to deterioration, theft, and other losses.
3. Deliver products to Project site in an undamaged condition in manufacturer's original sealed container or other packaging system, complete with labels and instructions for handling, storing, unpacking, protecting, and installing.
4. Inspect products on delivery to determine compliance with the Contract Documents and to determine that products are undamaged and properly protected.

C. Storage:

1. Store products to allow for inspection and measurement of quantity or counting of units.
2. Store materials in a manner that will not endanger Project structure.
3. Store products that are subject to damage by the elements, under cover in a weathertight enclosure above ground, with ventilation adequate to prevent condensation.
4. Protect foam plastic from exposure to sunlight, except to extent necessary for period of installation and concealment.
5. Comply with product manufacturer's written instructions for temperature, humidity, ventilation, and weather-protection requirements for storage.
6. Protect stored products from damage and liquids from freezing.

1.6 PRODUCT WARRANTIES

A. Warranties specified in other Sections shall be in addition to, and run concurrent with, other warranties required by the Contract Documents. Manufacturer's disclaimers and limitations on product warranties do not relieve Contractor of obligations under requirements of the Contract Documents.

1. Manufacturer's Warranty: Written standard warranty form furnished by individual manufacturer for a particular product and issued in the name of the Owner or endorsed by manufacturer to Owner.
2. Special Warranty: Written warranty required by the Contract Documents to provide specific rights for Owner and issued in the name of the Owner or endorsed by manufacturer to Owner.

B. Special Warranties: Prepare a written document that contains appropriate terms and identification, ready for execution.

1. Manufacturer's Standard Form: Modified to include Project-specific information and properly executed.
2. Specified Form: When specified forms are included in the Project Manual, prepare a written document, using indicated form properly executed.
3. See other Sections for specific content requirements and particular requirements for submitting special warranties.

C. Submittal Time: Comply with requirements in Section 01 7700 "Closeout Procedures."

PART 2 - PRODUCTS

2.1 PRODUCT SELECTION PROCEDURES

A. General Product Requirements: Provide products that comply with the Contract Documents, are undamaged and, unless otherwise indicated, are new at time of installation.

1. Provide products complete with accessories, trim, finish, fasteners, and other items needed for a complete installation and indicated use and effect.
2. Standard Products: If available, and unless custom products or nonstandard options are specified, provide standard products of types that have been produced and used successfully in similar situations on other projects.
3. Owner reserves the right to limit selection to products with warranties meeting requirements of the Contract Documents.
4. Where products are accompanied by the term "as selected," Architect will make selection.
5. Descriptive, performance, and reference standard requirements in the Specifications establish salient characteristics of products.

B. Product Selection Procedures:

1. Product: Where Specifications name a single manufacturer and product, provide the named product that complies with requirements. Comparable products or substitutions for Contractor's convenience will not be considered.
2. Manufacturer/Source: Where Specifications name a single manufacturer or source, provide a product by the named manufacturer or source that complies with requirements. Comparable products or substitutions for Contractor's convenience will not be considered.
3. Products:
   a. Restricted List: Where Specifications include a list of names of both manufacturers and products, provide one of the products listed that complies with requirements.

Comparable products or substitutions for Contractor's convenience will be considered.

b. Nonrestricted List: Where Specifications include a list of names of both available manufacturers and products, provide one of the products listed, or an unnamed product, that complies with requirements. Comply with requirements in "Comparable Products" Article for consideration of an unnamed product.

4. Manufacturers:

a. Restricted List: Where Specifications include a list of manufacturers' names, provide a product by one of the manufacturers listed that complies with requirements. Comparable products or substitutions for Contractor's convenience will be considered.

b. Nonrestricted List: Where Specifications include a list of available manufacturers, provide a product by one of the manufacturers listed, or a product by an unnamed manufacturer, that complies with requirements. Comply with requirements in "Comparable Products" Article for consideration of an unnamed manufacturer's product.

5. Basis-of-Design Product: Where Specifications name a product, or refer to a product indicated on Drawings, and include a list of manufacturers, provide the specified or indicated product or a comparable product by one of the other named manufacturers. Drawings and Specifications may additionally indicate sizes, profiles, dimensions, and other characteristics that are based on the product named. Comply with requirements in "Comparable Products" Article for consideration of an unnamed product by one of the other named manufacturers.

C. Visual Matching Specification: Where Specifications require the phrase "match Architect's sample," provide a product that complies with requirements and matches Architect's sample. Architect's decision will be final on whether a proposed product matches.

1. If no product available within specified category matches and complies with other specified requirements, comply with requirements in Section 01 2500 "Substitution Procedures" for proposal of product.

D. Visual Selection Specification: Where Specifications include the phrase "as selected by Architect from manufacturer's full range" or a similar phrase, select a product that complies with requirements. Architect will select color, gloss, pattern, density, or texture from manufacturer's product line that includes both standard and premium items.

2.2 COMPARABLE PRODUCTS

A. Conditions for Consideration of Comparable Products: Architect will consider Contractor's request for comparable product when the following conditions are satisfied. If the following conditions are not satisfied, Architect may return requests without action, except to record noncompliance with the following requirements:

1. Evidence that proposed product does not require revisions to the Contract Documents, is consistent with the Contract Documents, will produce the indicated results, and is compatible with other portions of the Work.
2. Detailed comparison of significant qualities of proposed product with those of the named basis-of-design product. Significant product qualities include attributes, such as type,

function, in-service performance and physical properties, weight, dimension, durability, visual characteristics, and other specific features and requirements.

3. Evidence that proposed product provides specified warranty.
4. List of similar installations for completed projects, with project names and addresses and names and addresses of architects and owners, if requested.
5. Samples, if requested.

PART 3 - EXECUTION (Not Used)

END OF SECTION 01 6000

SECTION 01 7419 - CONSTRUCTION WASTE MANAGEMENT AND DISPOSAL

PART 1 - GENERAL

1.1 SUMMARY

A. Section includes administrative and procedural requirements for the following:

1. Salvaging nonhazardous waste.
2. Recycling nonhazardous waste.
3. Disposing of nonhazardous waste.

1.2 DEFINITIONS

A. Construction Waste: Building, structure, and site improvement materials and other solid waste resulting from construction, remodeling, renovation, or repair operations. Construction waste includes packaging.

B. Demolition Waste: Building, structure, and site improvement materials resulting from demolition operations.

C. Disposal: Removal of demolition or construction waste and subsequent salvage, sale, recycling, or deposit in landfill, incinerator acceptable to authorities having jurisdiction, or designated spoil areas on Owner's property.

D. Recycle: Recovery of demolition or construction waste for subsequent processing in preparation for reuse.

E. Salvage: Recovery of demolition or construction waste and subsequent sale or reuse in another facility.

F. Salvage and Reuse: Recovery of demolition or construction waste and subsequent incorporation into the Work.

1.3 ACTION SUBMITTALS

A. Waste Management Plan: Submit plan within [**7**] days of date established for commencement of the Work .

1.4 INFORMATIONAL SUBMITTALS

A. Waste Reduction Progress Reports: Concurrent with each Application for Payment, submit report. Include the following information:

1. Material category.
2. Generation point of waste.

3. Total quantity of waste in tons.
4. Quantity of waste salvaged, both estimated and actual in tons.
5. Quantity of waste recycled, both estimated and actual in tons.
6. Total quantity of waste recovered (salvaged plus recycled) in tons.
7. Total quantity of waste recovered (salvaged plus recycled) as a percentage of total waste.

B. Waste Reduction Calculations: Before request for Substantial Completion, submit calculated end-of-Project rates for salvage, recycling, and disposal as a percentage of total waste generated by the Work.

C. Records of Donations: Indicate receipt and acceptance of salvageable waste donated to individuals and organizations. Indicate whether organization is tax exempt.

D. Records of Sales: Indicate receipt and acceptance of salvageable waste sold to individuals and organizations. Indicate whether organization is tax exempt.

E. Recycling and Processing Facility Records: Indicate receipt and acceptance of recyclable waste by recycling and processing facilities licensed to accept them. Include manifests, weight tickets, receipts, and invoices.

F. Landfill and Incinerator Disposal Records: Indicate receipt and acceptance of waste by landfills and incinerator facilities licensed to accept them. Include manifests, weight tickets, receipts, and invoices.

1.5 QUALITY ASSURANCE

A. Waste Management Conference: Conduct conference at Project site to comply with requirements in Section 01 3100 "Project Management and Coordination."

1.6 WASTE MANAGEMENT PLAN

A. General: Develop a waste management plan according to ASTM E 1609 and requirements in this Section. Plan shall consist of waste identification, waste reduction work plan, and cost/revenue analysis. Indicate quantities by weight or volume, but use same units of measure throughout waste management plan.

B. Waste Identification: Indicate anticipated types and quantities of waste generated by the Work. Include estimated quantities and assumptions for estimates.

C. Waste Reduction Work Plan: List each type of waste and whether it will be salvaged, recycled, or disposed of in landfill or incinerator. Include points of waste generation, total quantity of each type of waste, quantity for each means of recovery, and handling and transportation procedures.

1. Salvaged Materials for Reuse: For materials that will be salvaged and reused in this Project, describe methods for preparing salvaged materials before incorporation into the Work.
2. Salvaged Materials for Sale: For materials that will be sold to individuals and organizations, include list of their names, addresses, and telephone numbers.
3. Salvaged Materials for Donation: For materials that will be donated to individuals and organizations, include list of their names, addresses, and telephone numbers.

4. Recycled Materials: Include list of local receivers and processors and type of recycled materials each will accept. Include names, addresses, and telephone numbers.
5. Disposed Materials: Indicate how and where materials will be disposed of. Include name, address, and telephone number of each landfill and incinerator facility.
6. Handling and Transportation Procedures: Include method that will be used for separating recyclable waste including sizes of containers, container labeling, and designated location where materials separation will be performed.

PART 2 - PRODUCTS

PART 3 - EXECUTION

3.1 PLAN IMPLEMENTATION

A. General: Implement approved waste management plan. Provide handling, containers, storage, signage, transportation, and other items as required to implement waste management plan during the entire duration of the Contract.

B. Waste Management Coordinator: Engage a waste management coordinator to be responsible for implementing, monitoring, and reporting status of waste management work plan.

C. Training: Train workers, subcontractors, and suppliers on proper waste management procedures, as appropriate for the Work occurring at the site.

1. Distribute waste management plan to everyone concerned within 3 days of submittal return.
2. Distribute waste management plan to entities when they first begin work on-site. Review plan procedures and locations established for salvage, recycling, and disposal.

D. Site Access and Temporary Controls: Conduct waste management operations to ensure minimum interference with roads, streets, walks, walkways, and other adjacent occupied and used facilities.

1. Designate and label specific areas on Project site necessary for separating materials that are to be salvaged, recycled, reused, donated and sold.
2. Comply with Section 01 5000 "Temporary Facilities and Controls" for controlling dust and dirt, environmental protection, and noise control.

3.2 RECYCLING WASTE, GENERAL

A. General: Recycle paper and beverage containers used by on-site workers.

B. Recycling Receivers and Processors: List below is provided for information only; available recycling receivers and processors include, but are not limited to, the following:

C. Recycling Incentives: Revenues, savings, rebates, tax credits, and other incentives received for recycling waste materials shall [**accrue to Owner**] .

D. Procedures: Separate recyclable waste from other waste materials, trash, and debris. Separate recyclable waste by type at Project site to the maximum extent practical according to approved construction waste management plan.

1. Store components off the ground and protect from the weather.
2. Remove recyclable waste from Owner's property and transport to recycling receiver or processor.

E. Provide appropriately marked containers or bins for controlling recyclable waste until they are removed from Project site. Include list of acceptable and unacceptable materials at each container and bin.

1. Stockpile materials away from construction area. Do not store within drip line of remaining trees.

3.3 RECYCLING CONSTRUCTION WASTE

A. Packaging:

1. Cardboard and Boxes: Break down packaging into flat sheets. Bundle and store in a dry location.
2. Polystyrene Packaging: Separate and bag materials.
3. Pallets: As much as possible, require deliveries using pallets to remove pallets from Project site. For pallets that remain on-site, break down pallets into component wood pieces and comply with requirements for recycling wood.
4. Crates: Break down crates into component wood pieces and comply with requirements for recycling wood.

B. Wood Materials:

1. Clean Cut-Offs of Lumber: Grind or chip into small pieces.
2. Clean Sawdust: Bag sawdust that does not contain painted or treated wood.

C. Gypsum Board: Stack large clean pieces on wood pallets or in container and store in a dry location.

1. Clean Gypsum Board: Grind scraps of clean gypsum board using small mobile chipper or hammer mill. Screen out paper after grinding.

3.4 DISPOSAL OF WASTE

A. General: Except for items or materials to be salvaged or recycled, remove waste materials from Project site and legally dispose of them in a landfill or incinerator acceptable to authorities having jurisdiction.

1. Except as otherwise specified, do not allow waste materials that are to be disposed of accumulate on-site.
2. Remove and transport debris in a manner that will prevent spillage on adjacent surfaces and areas.

B. Burning: Do not burn waste materials.

C. Burning: Burning of waste materials is permitted only at designated areas on Owner's property, provided required permits are obtained. Provide full-time monitoring for burning materials until fires are extinguished.

D. Disposal: Remove waste materials and dispose of at designated spoil areas on Owner's property.

E. Disposal: Remove waste materials from Owner's property and legally dispose of them.

END OF SECTION 01 7419

SECTION 01 7700 - CLOSEOUT PROCEDURES

PART 1 - GENERAL

1.1 SUMMARY

A. Section includes administrative and procedural requirements for Contract closeout, including, but not limited to, the following:

1. Substantial Completion procedures.
2. Final completion procedures.
3. Warranties.
4. Final cleaning.
5. Repair of the Work.

1.2 ACTION SUBMITTALS

A. Product Data: For each type of cleaning agent.

B. Contractor's List of Incomplete Items: Initial submittal at Substantial Completion.

C. Certified List of Incomplete Items: Final submittal at Final Completion.

1.3 CLOSEOUT SUBMITTALS

A. Certificates of Release: From authorities having jurisdiction.

B. Certificate of Insurance: For continuing coverage.

C. Field Report: For pest-control inspection.

1.4 MAINTENANCE MATERIAL SUBMITTALS

A. Schedule of Maintenance Material Items: For maintenance material submittal items specified in other Sections.

1.5 SUBSTANTIAL COMPLETION PROCEDURES

A. Contractor's List of Incomplete Items: Prepare and submit a list of items to be completed and corrected (Contractor's "punch list"), indicating the value of each item on the list and reasons why the Work is incomplete.

B. Submittals Prior to Substantial Completion: Complete the following a minimum of [**10**] days prior to requesting inspection for determining date of Substantial Completion. List items below that are incomplete at time of request.

1. Certificates of Release: Obtain and submit releases from authorities having jurisdiction, permitting Owner unrestricted use of the Work and access to services and utilities. Include occupancy permits, operating certificates, and similar releases.
2. Submit closeout submittals specified in other Division 01 Sections, including Project Record Documents, operation and maintenance manuals, damage or settlement surveys, property surveys, and similar final record information.
3. Submit closeout submittals specified in individual Sections, including specific warranties, workmanship bonds, maintenance service agreements, final certifications, and similar documents.
4. Submit maintenance material submittals specified in individual Sections, including tools, spare parts, extra materials, and similar items, and deliver to location designated by Architect . Label with manufacturer's name and model number.
    a. Schedule of Maintenance Material Items: Prepare and submit schedule of maintenance material submittal items, including name and quantity of each item and name and number of related Specification Section. Obtain Architect's signature for receipt of submittals.
5. Submit testing, adjusting, and balancing records.
6. Submit changeover information related to Owner's occupancy, use, operation, and maintenance.

C. Procedures Prior to Substantial Completion: Complete the following a minimum of [**10**] days prior to requesting inspection for determining date of Substantial Completion. List items below that are incomplete at time of request.

1. Advise Owner of pending insurance changeover requirements.
2. Make final changeover of permanent locks and deliver keys to Owner. Advise Owner's personnel of changeover in security provisions.
3. Complete startup and testing of systems and equipment.
4. Perform preventive maintenance on equipment used prior to Substantial Completion.
5. Instruct Owner's personnel in operation, adjustment, and maintenance of products, equipment, and systems. Submit demonstration and training video recordings specified in Section 01 7900 "Demonstration and Training."
6. Advise Owner of changeover in heat and utility services.
7. Participate with Owner in conducting inspection and walkthrough with local emergency responders.
8. Terminate and remove temporary facilities from Project site, along with mockups, construction tools, and similar elements.
9. Complete final cleaning requirements.
10. Touch up paint and otherwise repair and restore marred exposed finishes to eliminate visual defects.

D. Inspection: Submit a written request for inspection to determine Substantial Completion a minimum of 10 days prior to date the Work will be completed and ready for final inspection and tests. On receipt of request, Architect will either proceed with inspection or notify Contractor of unfulfilled requirements. Architect will prepare the Certificate of Substantial Completion after inspection or will notify Contractor of items, either on Contractor's list or additional items identified by Architect, that must be completed or corrected before certificate will be issued.

1. Reinspection: Request reinspection when the Work identified in previous inspections as incomplete is completed or corrected.
2. Results of completed inspection will form the basis of requirements for final completion.

1.6 FINAL COMPLETION PROCEDURES

A. Preliminary Procedures: Before requesting final inspection for determining Final Completion, complete the following:

1. Submit a final Application for Payment in accordance with Section 01 2900 "Payment Procedures."
2. Certified List of Incomplete Items: Submit certified copy of Architect's Substantial Completion inspection list of items to be completed or corrected (punch list), endorsed and dated by Architect. Certified copy of the list shall state that each item has been completed or otherwise resolved for acceptance.
3. Certificate of Insurance: Submit evidence of final, continuing insurance coverage complying with insurance requirements.
4. Submit pest-control final inspection report.
5. Instruct Owner's personnel in operation, adjustment, and maintenance of products, equipment, and systems.

B. Inspection: Submit a written request for final inspection to determine acceptance a minimum of 10 days prior to date the Work will be completed and ready for final inspection and tests. On receipt of request, Architect will either proceed with inspection or notify Contractor of unfulfilled requirements. Architect will prepare a final Certificate for Payment after inspection or will notify Contractor of construction that must be completed or corrected before certificate will be issued.

1. Reinspection: Request reinspection when the Work identified in previous inspections as incomplete is completed or corrected.

1.7 LIST OF INCOMPLETE ITEMS

A. Organization of List: Include name and identification of each space and area affected by construction operations for incomplete items and items needing correction including, if necessary, areas disturbed by Contractor that are outside the limits of construction.

1. Organize list of spaces in sequential order.
2. Organize items applying to each space by major element, including categories for ceilings, individual walls, floors, equipment, and building systems.
3. Submit list of incomplete items in the following format:
   a. MS Excel Electronic File: Architect will return annotated file.
   b. PDF Electronic File: Architect will return annotated file.
   c. 3 Paper Copies: Architect will return 2 copies.

1.8 SUBMITTAL OF PROJECT WARRANTIES

A. Time of Submittal: Submit written warranties on request of Architect for designated portions of the Work where warranties are indicated to commence on dates other than date of Substantial Completion, or when delay in submittal of warranties might limit Owner's rights under warranty.

B. Organize warranty documents into an orderly sequence based on the table of contents of Project Manual.

1. Bind warranties and bonds in heavy-duty, three-ring, vinyl-covered, loose-leaf binders, thickness as necessary to accommodate contents, and sized to receive 8-1/2-by-11-inch (paper.
2. Provide heavy paper dividers with plastic-covered tabs for each separate warranty. Mark tab to identify the product or installation. Provide a typed description of the product or installation, including the name of the product and the name, address, and telephone number of Installer.
3. Identify each binder on the front and spine with the typed or printed title "WARRANTIES," Project name, and name of Contractor.
4. Warranty Electronic File: Scan warranties and bonds and assemble complete warranty and bond submittal package into a single indexed electronic PDF file with links enabling navigation to each item. Provide bookmarked table of contents at beginning of document.

C. Provide additional copies of each warranty to include in operation and maintenance manuals.

PART 2 - PRODUCTS

2.1 MATERIALS

A. Cleaning Agents: Use cleaning materials and agents recommended by manufacturer or fabricator of the surface to be cleaned. Do not use cleaning agents that are potentially hazardous to health or property or that might damage finished surfaces.

1. Use cleaning products that comply with Green Seal's GS-37, or if GS-37 is not applicable, use products that comply with the California Code of Regulations maximum allowable VOC levels.

PART 3 - EXECUTION

3.1 FINAL CLEANING

A. General: Perform final cleaning. Conduct cleaning and waste-removal operations to comply with local laws and ordinances and Federal and local environmental and antipollution regulations.

B. Cleaning: Employ experienced workers or professional cleaners for final cleaning. Clean each surface or unit to condition expected in an average commercial building cleaning and maintenance program. Comply with manufacturer's written instructions.

1. Complete the following cleaning operations before requesting inspection for certification of Substantial Completion for entire Project or for a designated portion of Project:
   a. Clean Project site of rubbish, waste material, litter, and other foreign substances.
   b. Sweep paved areas broom clean. Remove petrochemical spills, stains, and other foreign deposits.
   c. Rake grounds that are neither planted nor paved to a smooth, even-textured surface.
   d. Remove tools, construction equipment, machinery, and surplus material from Project site.
   e. Remove snow and ice to provide safe access to building.

f. Clean exposed exterior and interior hard-surfaced finishes to a dirt-free condition, free of stains, films, and similar foreign substances. Avoid disturbing natural weathering of exterior surfaces. Restore reflective surfaces to their original condition.
g. Remove debris and surface dust from limited-access spaces, including roofs, plenums, shafts, trenches, equipment vaults, manholes, attics, and similar spaces.
h. Sweep concrete floors broom clean in unoccupied spaces.
i. Vacuum carpet and similar soft surfaces, removing debris and excess nap; clean according to manufacturer's recommendations if visible soil or stains remain.
j. Clean transparent materials, including mirrors and glass in doors and windows. Remove glazing compounds and other noticeable, vision-obscuring materials. Polish mirrors and glass, taking care not to scratch surfaces.
k. Remove labels that are not permanent.
l. Wipe surfaces of mechanical and electrical equipment and similar equipment. Remove excess lubrication, paint and mortar droppings, and other foreign substances.
m. Clean plumbing fixtures to a sanitary condition, free of stains, including stains resulting from water exposure.
n. Replace disposable air filters and clean permanent air filters. Clean exposed surfaces of diffusers, registers, and grills.
o. Clean luminaires, lamps, globes, and reflectors to function with full efficiency.
p. Leave Project clean and ready for occupancy.

C. Pest Control: Comply with pest control requirements in Section 01 5000 "Temporary Facilities and Controls." Prepare written report.

3.2 REPAIR OF THE WORK

A. Complete repair and restoration operations required by Section 01 7300 "Execution" before requesting inspection for determination of Substantial Completion.

B. Repair or remove and replace defective construction. Repairing includes replacing defective parts, refinishing damaged surfaces, touching up with matching materials, and properly adjusting operating equipment. Where damaged or worn items cannot be repaired or restored, provide replacements. Remove and replace operating components that cannot be repaired. Restore damaged construction and permanent facilities used during construction to specified condition.

1. Remove and replace chipped, scratched, and broken glass, reflective surfaces, and other damaged transparent materials.
2. Touch up and otherwise repair and restore marred or exposed finishes and surfaces. Replace finishes and surfaces that that already show evidence of repair or restoration.
   a. Do not paint over "UL" and other required labels and identification, including mechanical and electrical nameplates. Remove paint applied to required labels and identification.
3. Replace parts subject to operating conditions during construction that may impede operation or reduce longevity.
4. Replace burned-out bulbs, bulbs noticeably dimmed by hours of use, and defective and noisy starters in fluorescent and mercury vapor fixtures to comply with requirements for new fixtures.

END OF SECTION 01 7700

SECTION 01 7823 - OPERATION AND MAINTENANCE DATA

PART 1 - GENERAL

1.1 SUMMARY

A. Section includes administrative and procedural requirements for preparing operation and maintenance manuals, including the following:

1. Operation and maintenance documentation directory manuals.
2. Emergency manuals.
3. Operation manuals for systems, subsystems, and equipment.
4. Product maintenance manuals.
5. Systems and equipment maintenance manuals.

1.2 CLOSEOUT SUBMITTALS

A. Manual Content: Operations and maintenance manual content is specified in individual Specification Sections to be reviewed at the time of Section submittals. Submit reviewed manual content formatted and organized as required by this Section.

1. Architect will comment on whether content of operations and maintenance submittals are acceptable.
2. Where applicable, clarify and update reviewed manual content to correspond to revisions and field conditions.

B. Format: Submit operation and maintenance manuals in the following format:

1. PDF electronic file. Assemble each manual into a composite electronically indexed file. Submit on digital media acceptable to Architect.
   a. Name each indexed document file in composite electronic index with applicable item name. Include a complete electronically linked operation and maintenance directory.
   b. Enable inserted reviewer comments on draft submittals.
2. Submit 3 paper copies. Include a complete operation and maintenance directory. Enclose title pages and directories in clear plastic sleeves. Architect will return 2 copies.

C. Manual Submittal: Submit each manual in final form prior to requesting inspection for Substantial Completion and at least **15** days before commencing demonstration and training. Architect will return copy with comments.

1. Correct or revise each manual to comply with Architect's comments. Submit copies of each corrected manual within **15** days of receipt of Architect's comments and prior to commencing demonstration and training.

PART 2 - PRODUCTS (Not Used)

2.1 REQUIREMENTS FOR EMERGENCY, OPERATION, AND MAINTENANCE MANUALS

A. Directory: Prepare a single, comprehensive directory of emergency, operation, and maintenance data and materials, listing items and their location to facilitate ready access to desired information.

B. Organization: Unless otherwise indicated, organize each manual into a separate section for each system and subsystem, and a separate section for each piece of equipment not part of a system. Each manual shall contain the following materials, in the order listed:

1. Title page.
2. Table of contents.
3. Manual contents.

C. Title Page: Include the following information:

1. Subject matter included in manual.
2. Name and address of Project.
3. Name and address of Owner.
4. Date of submittal.
5. Name and contact information for Contractor.
6. Name and contact information for Construction Manager.
7. Name and contact information for Architect.
8. Name and contact information for Commissioning Authority.
9. Names and contact information for major consultants to the Architect that designed the systems contained in the manuals.
10. Cross-reference to related systems in other operation and maintenance manuals.

D. Table of Contents: List each product included in manual, identified by product name, indexed to the content of the volume, and cross-referenced to Specification Section number in Project Manual.

E. Manual Contents: Organize into sets of manageable size. Arrange contents alphabetically by system, subsystem, and equipment. If possible, assemble instructions for subsystems, equipment, and components of one system into a single binder.

F. Manuals, Electronic Files: Submit manuals in the form of a multiple file composite electronic PDF file for each manual type required.

1. Electronic Files: Use electronic files prepared by manufacturer where available. Where scanning of paper documents is required, configure scanned file for minimum readable file size.
2. File Names and Bookmarks: Enable bookmarking of individual documents based on file names. Name document files to correspond to system, subsystem, and equipment names used in manual directory and table of contents. Group documents for each system and subsystem into individual composite bookmarked files, then create composite manual, so that resulting bookmarks reflect the system, subsystem, and equipment names in a readily navigated file tree. Configure electronic manual to display bookmark panel on opening file.

G. Manuals, Paper Copy: Submit manuals in the form of hard copy, bound and labeled volumes.

1. Binders: Heavy-duty, three-ring, vinyl-covered, binders, in thickness necessary to accommodate contents, sized to hold 8-1/2-by-11-inch paper; with clear plastic sleeve on spine to hold label describing contents and with pockets inside covers to hold folded oversize sheets.
   a. Identify each binder on front and spine, with printed title "OPERATION AND MAINTENANCE MANUAL,"
2. Dividers: Heavy-paper dividers with plastic-covered tabs for each section of the manual. Mark each tab to indicate contents. Include typed list of products and major components of equipment included in the section on each divider, cross-referenced to Specification Section number and title of Project Manual.
3. Protective Plastic Sleeves: Transparent plastic sleeves designed to enclose diagnostic software storage media for computerized electronic equipment.
4. Drawings: Attach reinforced, punched binder tabs on drawings and bind with text.
   a. If oversize drawings are necessary, fold drawings to same size as text pages and use as foldouts.
   b. If drawings are too large to be used as foldouts, fold and place drawings in labeled envelopes and bind envelopes in rear of manual. At appropriate locations in manual, insert typewritten pages indicating drawing titles, descriptions of contents, and drawing locations.

2.2 EMERGENCY MANUALS

A. Content: Organize manual into a separate section for each of the following:

1. Type of emergency.
2. Emergency instructions.
3. Emergency procedures.

B. Type of Emergency: Where applicable for each type of emergency indicated below, include instructions and procedures for each system, subsystem, piece of equipment, and component:

1. Fire.
2. Flood.
3. Water Leak.
4. Power failure.
5. Water outage.
6. System, subsystem, or equipment failure.
7. Chemical release or spill.
8. Emergency Instructions: Describe and explain warnings, trouble indications, error messages, and similar codes and signals. Include responsibilities of Owner's operating personnel for notification of Installer, supplier, and manufacturer to maintain warranties.

C. Emergency Procedures: Include the following, as applicable:

1. Instructions on stopping.
2. Shutdown instructions for each type of emergency.
3. Operating instructions for conditions outside normal operating limits.
4. Required sequences for electric or electronic systems.

5. Special operating instructions and procedures.

2.3 OPERATION MANUALS

A. Content: In addition to requirements in this Section, include operation data required in individual Specification Sections and the following information:

1. System, subsystem, and equipment descriptions. Use designations for systems and equipment indicated on Contract Documents.
2. Performance and design criteria if Contractor is delegated design responsibility.
3. Operating standards.
4. Operating procedures.
5. Operating logs.
6. Wiring diagrams.
7. Control diagrams.
8. Piped system diagrams.
9. Precautions against improper use.
10. License requirements including inspection and renewal dates.

B. Descriptions: Include the following:

1. Product name and model number. Use designations for products indicated on Contract Documents.
2. Manufacturer's name.
3. Equipment identification with serial number of each component.
4. Equipment function.
5. Operating characteristics.
6. Limiting conditions.
7. Performance curves.
8. Engineering data and tests.
9. Complete nomenclature and number of replacement parts.

C. Operating Procedures: Include the following, as applicable:

1. Startup procedures.
2. Equipment or system break-in procedures.
3. Routine and normal operating instructions.
4. Regulation and control procedures.
5. Instructions on stopping.
6. Normal shutdown instructions.
7. Seasonal and weekend operating instructions.
8. Required sequences for electric or electronic systems.
9. Special operating instructions and procedures.

D. Systems and Equipment Controls: Describe the sequence of operation, and diagram controls as installed.

E. Piped Systems: Diagram piping as installed, and identify color-coding where required for identification.

2.4 PRODUCT MAINTENANCE MANUALS

A. Content: Organize manual into a separate section for each product, material, and finish. Include source information, product information, maintenance procedures, repair materials and sources, and warranties and bonds, as described below.

B. Source Information: List each product included in manual, identified by product name and arranged to match manual's table of contents. For each product, list name, address, and telephone number of Installer or supplier and maintenance service agent, and cross-reference Specification Section number and title in Project Manual.

C. Product Information: Include the following, as applicable:

1. Product name and model number
2. Manufacturer's name.
3. Color, pattern, and texture.
4. Material and chemical composition.
5. Reordering information for specially manufactured products.

D. Maintenance Procedures: Include manufacturer's written recommendations and the following:

1. Inspection procedures.
2. Types of cleaning agents to be used and methods of cleaning.
3. List of cleaning agents and methods of cleaning detrimental to product.
4. Schedule for routine cleaning and maintenance.
5. Repair instructions.

E. Repair Materials and Sources: Include lists of materials and local sources of materials and related services.

F. Warranties and Bonds: Include copies of warranties and bonds and lists of circumstances and conditions that would affect validity of warranties or bonds.

2.5 SYSTEMS AND EQUIPMENT MAINTENANCE MANUALS

A. Content: For each system, subsystem, and piece of equipment not part of a system, include source information, manufacturers' maintenance documentation, maintenance procedures, maintenance and service schedules, spare parts list and source information, maintenance service contracts, and warranty and bond information, as described below.

B. Source Information: List each system, subsystem, and piece of equipment included in manual, identified by product name and arranged to match manual's table of contents. For each product, list name, address, and telephone number of Installer or supplier and maintenance service agent, and cross-reference Specification Section number and title in Project Manual.

C. Manufacturers' Maintenance Documentation: Manufacturers' maintenance documentation including the following information for each component part or piece of equipment:

1. Standard maintenance instructions and bulletins.

2. Drawings, diagrams, and instructions required for maintenance, including disassembly and component removal, replacement, and assembly.
3. Identification and nomenclature of parts and components.
4. List of items recommended to be stocked as spare parts.
5. List of items recommended to be stocked as spare parts.
6. Test and inspection instructions.
7. Troubleshooting guide.
8. Precautions against improper maintenance.
9. Disassembly; component removal, repair, and replacement; and reassembly instructions.
10. Aligning, adjusting, and checking instructions.
11. Demonstration and training video recording, if available.

D. Maintenance and Service Schedules: Include service and lubrication requirements, list of required lubricants for equipment, and separate schedules for preventive and routine maintenance and service with standard time allotment.

E. Spare Parts List and Source Information: Include lists of replacement and repair parts, with parts identified and cross-referenced to manufacturers' maintenance documentation and local sources of maintenance materials and related services.

F. Maintenance Service Contracts: Include copies of maintenance agreements with name and telephone number of service agent.

G. Warranties and Bonds: Include copies of warranties and bonds and lists of circumstances and conditions that would affect validity of warranties or bonds.

PART 3 - EXECUTION (Not Used)

3.1 MANUAL PREPARATION

A. Emergency Manual: Assemble a complete set of emergency information indicating procedures for use by emergency personnel and by Owner's operating personnel for types of emergencies indicated.

B. Product Maintenance Manual: Assemble a complete set of maintenance data indicating care and maintenance of each product, material, and finish incorporated into the Work.

C. Operation and Maintenance Manuals: Assemble a complete set of operation and maintenance data indicating operation and maintenance of each system, subsystem, and piece of equipment not part of a system.

D. Manufacturers' Data: Where manuals contain manufacturers' standard printed data, include only sheets pertinent to product or component installed. Mark each sheet to identify each product or component incorporated into the Work. If data include more than one item in a tabular format, identify each item using appropriate references from the Contract Documents. Identify data applicable to the Work and delete references to information not applicable.

E. Drawings: Prepare drawings supplementing manufacturers' printed data to illustrate the relationship of component parts of equipment and systems and to illustrate control sequence and

flow diagrams. Coordinate these drawings with information contained in record Drawings to ensure correct illustration of completed installation.

1. Do not use original project record documents as part of operation and maintenance manuals.

F. Comply with Section 01 7700 "Closeout Procedures" for schedule for submitting operation and maintenance documentation.

END OF SECTION 01 7823

SECTION 01 7900 - DEMONSTRATION AND TRAINING

PART 1 - GENERAL

1.1 SUMMARY

A. Section includes administrative and procedural requirements for instructing Owner's personnel, including the following:

1. Demonstration of operation of systems, subsystems, and equipment.
2. Training in operation and maintenance of systems, subsystems, and equipment.
3. Demonstration and training video recordings.

1.2 INFORMATIONAL SUBMITTALS

A. Instruction Program: Submit outline of instructional program for demonstration and training, including a list of training modules and a schedule of proposed dates, times, length of instruction time, and instructors' names for each training module. Include learning objective and outline for each training module.

1. Indicate proposed training modules using manufacturer-produced demonstration and training video recordings for systems, equipment, and products in lieu of video recording of live instructional module.

1.3 CLOSEOUT SUBMITTALS

A. Operation and maintenance manuals.

B. Facilitator Qualifications: A firm or individual experienced in training or educating maintenance personnel in a training program similar in content and extent to that indicated for this Project, and whose work has resulted in training or education with a record of successful learning performance.

C. Instructor Qualifications: A factory-authorized service representative, complying with requirements in Section 01 4000 "Quality Requirements," experienced in operation and maintenance procedures and training.

D. Preinstruction Conference: Conduct conference at Project site to comply with requirements in Section 01 3100 "Project Management and Coordination." Review methods and procedures related to demonstration and training.

1.4 COORDINATION

A. Coordinate instruction schedule with Owner's operations. Adjust schedule as required to minimize disrupting Owner's operations and to ensure availability of Owner's personnel.

B. Coordinate content of training modules with content of approved emergency, operation, and maintenance manuals. Do not submit instruction program until operation and maintenance data have been reviewed and approved by Architect.

PART 2 - PRODUCTS

2.1 INSTRUCTION PROGRAM

A. Program Structure: Develop an instruction program that includes individual training modules for each system and for equipment not part of a system, as required by individual Specification Sections.

B. Training Modules: Develop a learning objective and teaching outline for each module. Include a description of specific skills and knowledge that participant is expected to master. For each module, include instruction for the following as applicable to the system, equipment, or component:

1. Basis of System Design, Operational Requirements, and Criteria: Include the following:
   a. System, subsystem, and equipment descriptions.
   b. Performance and design criteria if Contractor is delegated design responsibility.
   c. Operating standards.
   d. Regulatory requirements.
   e. Equipment function.
   f. Operating characteristics.
   g. Limiting conditions.
   h. Performance curves.
2. Documentation: Review the following items in detail:
   a. Emergency manuals.
   b. Operations manuals.
   c. Maintenance manuals.
   d. Project record documents.
   e. Identification systems.
   f. Warranties and bonds.
   g. Maintenance service agreements and similar continuing commitments.
3. Emergencies: Include the following, as applicable:
   a. Instructions on meaning of warnings, trouble indications, and error messages.
   b. Instructions on stopping.
   c. Shutdown instructions for each type of emergency.
   d. Operating instructions for conditions outside of normal operating limits.
   e. Sequences for electric or electronic systems.
   f. Special operating instructions and procedures.
4. Operations: Include the following, as applicable:
   a. Startup procedures.
   b. Equipment or system break-in procedures.
   c. Routine and normal operating instructions.
   d. Regulation and control procedures.
   e. Control sequences.
   f. Safety procedures.
   g. Instructions on stopping.

h. Normal shutdown instructions.
i. Operating procedures for emergencies.
j. Operating procedures for system, subsystem, or equipment failure.
k. Seasonal and weekend operating instructions.
l. Required sequences for electric or electronic systems.
m. Special operating instructions and procedures.

5. Adjustments: Include the following:
   a. Alignments.
   b. Checking adjustments.
   c. Noise and vibration adjustments.
   d. Economy and efficiency adjustments.
6. Troubleshooting: Include the following:
   a. Diagnostic instructions.
   b. Test and inspection procedures.
7. Maintenance: Include the following:
   a. Inspection procedures.
   b. Types of cleaning agents to be used and methods of cleaning.
   c. List of cleaning agents and methods of cleaning detrimental to product.
   d. Procedures for routine cleaning
   e. Procedures for preventive maintenance.
   f. Procedures for routine maintenance.
   g. Instruction on use of special tools.
8. Repairs: Include the following:
   a. Diagnosis instructions.
   b. Repair instructions.
   c. Disassembly; component removal, repair, and replacement; and reassembly instructions.
   d. Instructions for identifying parts and components.
   e. Review of spare parts needed for operation and maintenance.

PART 3 - EXECUTION

3.1 PREPARATION

A. Assemble educational materials necessary for instruction, including documentation and training module. Assemble training modules into a training manual organized in coordination with requirements in Section 01 7823 "Operation and Maintenance Data."

3.2 INSTRUCTION

A. Facilitator: Engage a qualified facilitator to prepare instruction program and training modules, to coordinate instructors, and to coordinate between Contractor and Owner for number of participants, instruction times, and location.

B. Engage qualified instructors to instruct Owner's personnel to adjust, operate, and maintain systems, subsystems, and equipment not part of a system.

1. Architect will furnish an instructor to describe basis of system design, operational requirements, criteria, and regulatory requirements.
2. Owner will furnish an instructor to describe Owner's operational philosophy.
3. Owner will furnish Contractor with names and positions of participants.

C. Training Location and Reference Material: Conduct training on-site in the completed and fully operational facility using the actual equipment in-place. Conduct training using final operation and maintenance data submittals.

END OF SECTION 01 7900

SECTION 02 3000 - SUBSURFACE INVESTIGATION

PART 1 - GENERAL

1.1 TEST BORINGS

1.2 The Owner has explored subsurface conditions by making test borings/pits.

1.3 Test borings/pit logs are available for information only. Neither the Owner nor the Architect assumes responsibility for the accuracy of the information.

1.4 The test borings/pits are believed to be a reasonable indication of existing soil conditions. The Contractor shall verify conditions affecting the work and make his own interpretation of the test boring information.

1.5 A geotechnical engineering report has been prepared for this project. See Appendix A

1.6 A copy of this report and test borings is included as a separate attachment. The Contractor's use of this information is at his own risk and its inclusion is no way guarantees that the entire site or soil conditions are as indicated by the report.

1.7 Should the data contained in this report not be adequate for the Contractor's purposes, the Contractor may make his own investigation, tests, and analysis for use in his bid preparation.

END OF SECTION 02 3000

SECTION 03 1000 - CONCRETE FORMING AND ACCESSORIES

PART 1 - GENERAL

1.1 RELATED DOCUMENTS

A. Drawings and general provisions of the Contract, including General and Supplementary Conditions and Division 01 Specification Sections, apply to this Section.

1.2 SUMMARY

A. Section Includes:

1. Form-facing material for cast-in-place concrete.
2. Form liners.
3. Insulating concrete forms.
4. Shoring, bracing, and anchoring.

B. Related Requirements:

1. Section 32 1313 "Concrete Paving" for formwork related to concrete pavement and walks.
2. Section 32 1316 "Decorative Concrete Paving" for formwork related to decorative concrete pavement and walks.

1.3 DEFINITIONS

A. Form-Facing Material: Temporary structure or mold for the support of concrete while the concrete is setting and gaining sufficient strength to be self-supporting.

B. Formwork: The total system of support of freshly placed concrete, including the mold or sheathing that contacts the concrete, as well as supporting members, hardware, and necessary bracing.

1.4 PREINSTALLATION MEETINGS

A. Preinstallation Conference: Conduct conference at [**Project site**] .

1. Review the following:
   a. Special inspection and testing and inspecting agency procedures for field quality control.
   b. Construction, movement, contraction, and isolation joints
   c. Forms and form-removal limitations.
   d. Shoring and reshoring procedures.
   e. Anchor rod and anchorage device installation tolerances.

1.5 ACTION SUBMITTALS

A. Product Data: For each of the following:

1. Exposed surface form-facing material.
2. Concealed surface form-facing material.
3. Forms for cylindrical columns.
4. Pan-type forms.
5. Void forms.
6. Form liners.
7. Insulating concrete forms.
8. Form ties.
9. Waterstops.
10. Form-release agent.

B. Shop Drawings: Prepared by, and signed and sealed by, a qualified professional engineer responsible for their preparation, detailing fabrication, assembly, and support of forms.

1. For exposed vertical concrete walls, indicate dimensions and form tie locations.
2. Indicate dimension and locations of construction and movement joints required to construct the structure in accordance with ACI 301 (ACI 301M).
   a. Location of construction joints is subject to approval of the Architect.
3. Indicate location of waterstops.
4. Indicate form liner layout and form line termination details.
5. Indicate proposed schedule and sequence of stripping of forms, shoring removal, and reshoring installation and removal.
6. Indicate layout of insulating concrete forms, dimensions, course heights, form types, and details.

C. Samples:

1. For waterstops.
2. For Form Liners: 12-inch by 12-inch (305-mm by 305-mm) sample, indicating texture.

1.6 INFORMATIONAL SUBMITTALS

A. Qualification Data: For testing and inspection agency.

B. Research Reports: For insulating concrete forms indicating compliance with International Code Council Acceptance Criteria AC353.

C. Field quality-control reports.

D. Minutes of preinstallation conference.

1.7 QUALITY ASSURANCE

A. Testing and Inspection Agency Qualifications: An independent agency, acceptable to authorities having jurisdiction, qualified in accordance with ASTM C1077 and ASTM E329 for testing indicated.

B. Mockups: Formed surfaces to demonstrate typical joints, surface finish, texture, tolerances, and standard of workmanship.

1. Build panel approximately 100 sq. ft. (9.3 sq. m) in the location indicated or, if not indicated, as directed by Architect.
2. Subject to compliance with requirements, approved mockups may become part of the completed Work.

1.8 DELIVERY, STORAGE, AND HANDLING

A. Form Liners: Store form liners under cover to protect from sunlight.

B. Insulating Concrete Forms: Store forms off ground and under cover to protect from moisture, sunlight, dirt, oil, and other contaminants.

C. Waterstops: Store waterstops under cover to protect from moisture, sunlight, dirt, oil, and other contaminants.

PART 2 - PRODUCTS

2.1 PERFORMANCE REQUIREMENTS

A. Concrete Formwork: Design, engineer, erect, shore, brace, and maintain formwork, shores, and reshores in accordance with ACI 301 (ACI 301M)(ACI 301M), to support vertical, lateral, static, and dynamic loads, and construction loads that might be applied, until structure can support such loads, so that resulting concrete conforms to the required shapes, lines, and dimensions.

1. Design wood panel forms in accordance with APA's "Concrete Forming Design/Construction Guide."
2. Design formwork to limit deflection of form-facing material to 1/240 of center-to-center spacing of supports.
   a. For architectural concrete specified in Section 03 3300 "Architectural Concrete," limit deflection of form-facing material, studs, and walers to 0.0025 times their respective clear spans (L/400).

B. Design, engineer, erect, shore, brace, and maintain insulating concrete forms in accordance with ACI 301 (ACI 301M), to support vertical, lateral, static, and dynamic loads, and construction loads that might be applied, until structure can support such loads, so that resulting concrete conforms to the required shapes, lines, and dimensions.

1. Design cross ties to transfer the effects of the following loads to the cast-in-place concrete core:
    a. Wind Loads: As indicated on Drawings.
        1) Horizontal Deflection Limit: Not more than 1/360 of the wall height.

2.2 FORM-FACING MATERIALS

A. As-Cast Surface Form-Facing Material:

1. Provide continuous, true, and smooth concrete surfaces.
2. Furnish in largest practicable sizes to minimize number of joints.
3. Acceptable Materials: As required to comply with Surface Finish designations specified in Section 03 3000 "Cast-In-Place Concrete, and as follows:
    a. Plywood, metal, or other approved panel materials.
    b. Exterior-grade plywood panels, suitable for concrete forms, complying with DOC PS 1, and as follows:
        1) APA HDO (high-density overlay).
        2) APA MDO (medium-density overlay); mill-release agent treated and edge sealed.
        3) APA Structural 1 Plyform, B-B or better; mill oiled and edge sealed.
        4) APA Plyform Class I, B-B or better; mill oiled and edge sealed.

B. Concealed Surface Form-Facing Material: Lumber, plywood, metal, plastic, or another approved material.

1. Provide lumber dressed on at least two edges and one side for tight fit.

C. Pan-Type Forms: Glass-fiber-reinforced plastic or formed steel, stiffened to resist plastic concrete loads without detrimental deformation, with straight or tapered end forms.

D. Void Forms: Biodegradable paper surface, treated for moisture resistance, structurally sufficient to support weight of plastic concrete and other superimposed loads.

2.3 WATERSTOPS

A. Flexible Rubber Waterstops: U.S. Army Corps of Engineers CRD-C 513, [**with factory-installed metal eyelets,**] for embedding in concrete to prevent passage of fluids through joints, with factory fabricate corners, intersections, and directional changes.

1. Manufacturers: Subject to compliance with requirements, available manufacturers offering products that may be incorporated into the Work include, but are not limited to the following:
    a. Williams Products, Inc.
2. Profile: [**Flat dumbbell with center bulb**] .
3. Dimensions: [**4 inches by 3/16 inch thick (100 mm by 4.8 mm thick)**] 100 mm by 4.8mm thick ; nontapered.

B. Chemically Resistant Flexible Waterstops: Thermoplastic elastomer rubber waterstops with factory-installed metal eyelets, for embedding in concrete to prevent passage of fluids through

joints; resistant to oils, solvents, and chemicals, with factory fabricate corners, intersections, and directional changes.

1. Manufacturers: Subject to compliance with requirements, available manufacturers offering products that may be incorporated into the Work include, but are not limited to the following:
   a. JP Specialties, Inc.
   b. Sika Corporation
2. Profile: Flat dumbbell with center bulb.
3. Dimensions: 4 inches by 3/16 inch thick (100 mm by 4.8 mm thick); nontapered.

C. Flexible PVC Waterstops: U.S. Army Corps of Engineers CRD-C 572, [**with factory-installed metal eyelets,**] for embedding in concrete to prevent passage of fluids through joints, with factory fabricate corners, intersections, and directional changes.

1. Manufacturers: Subject to compliance with requirements, available manufacturers offering products that may be incorporated into the Work include, but are not limited to the following:
   a. BoMetals, Inc.
   b. Sika Corporation.
   c. Vinylex Waterstop & Accessories.
2. Profile: [**Flat dumbbell with center bulb**] .
3. Dimensions: 4 inches by 3/16 inch thick (100 mm by 4.8 mm thick) 100 mm by 4.8 mm thick

D. Self-Expanding Butyl Strip Waterstops: Manufactured rectangular or trapezoidal strip, butyl rubber with sodium bentonite or other hydrophilic polymers, for adhesive bonding to concrete, 3/4 by 1 inch (19 by 25 mm) (19 by 25 mm).

1. Manufacturers: Subject to compliance with requirements, available manufacturers offering products that may be incorporated into the Work include, but are not limited to the following:
   a. Carlisle Coatings & Waterproofing Inc.
   b. CETCO, a Minerals Technologies company.
   c. Concrete Sealants Inc.
   d. Henry Company.
   e. JP Specialties, Inc.
   f. Sika Corporation.

E. Self-Expanding Rubber Strip Waterstops: Manufactured rectangular or trapezoidal strip, bentonite-free hydrophilic polymer-modified chloroprene rubber, for adhesive bonding to concrete, 3/8 by 3/4 inch (10 by 19 mm)(10 by 19 mm).

1. Manufacturers: Subject to compliance with requirements, available manufacturers offering products that may be incorporated into the Work include, but are not limited to the following:
   a. Adeka Corporation.
   b. CETCO, a Minerals Technologies company.
   c. GCP Applied Technologies Inc.
   d. Kryton International Inc.
   e. Sika Corporation.

2.4 RELATED MATERIALS

A. Reglets: Fabricate reglets of not less than 0.022-inch- (0.55-mm-) (0.55-mm-) thick, galvanized-steel sheet. Temporarily fill or cover face opening of reglet to prevent intrusion of concrete or debris.

B. Dovetail Anchor Slots: Hot-dip galvanized-steel sheet, not less than 0.034 inch (0.85 mm) (0.85 mm) thick, with bent tab anchors. Temporarily fill or cover face opening of slots to prevent intrusion of concrete or debris.

C. Chamfer Strips: Wood, metal, PVC, or rubber strips, 3/4 by 3/4 inch (19 by 19 mm) (19 by 19 mm), minimum.

D. Rustication Strips: Wood, metal, PVC, or rubber strips, kerfed for ease of form removal.

E. Form-Release Agent: Commercially formulated form-release agent that does not bond with, stain, or adversely affect concrete surfaces and does not impair subsequent treatments of concrete surfaces.

1. Formulate form-release agent with rust inhibitor for steel form-facing materials.
2. Form release agent for form liners shall be acceptable to form liner manufacturer.

F. Form Ties: Factory-fabricated, removable or snap-off, glass-fiber-reinforced plastic or metal form ties designed to resist lateral pressure of fresh concrete on forms and to prevent spalling of concrete on removal.

1. Furnish units that leave no corrodible metal closer than 1 inch (25 mm) to the plane of exposed concrete surface.
2. Furnish ties that, when removed, leave holes no larger than 1 inch (25 mm) in diameter in concrete surface.
3. Furnish ties with integral water-barrier plates to walls indicated to receive dampproofing or waterproofing.

PART 3 - EXECUTION

3.1 INSTALLATION OF FORMWORK

A. Comply with ACI 301 (ACI 301M) (ACI 301M).

B. Construct formwork, so concrete members and structures are of size, shape, alignment, elevation, and position indicated, within tolerance limits of ACI 117 (ACI 117M) (ACI 117M) and to comply with the Surface Finish designations specified in Section 03 3000 "Cast-In-Place Concrete" for as-cast finishes .

C. Limit concrete surface irregularities as follows:

1. Surface Finish-1.0: ACI 117 Class D, 1 inch (25 mm) (25 mm).
2. Surface Finish-2.0: ACI 117 Class B, 1/4 inch (6 mm) (6 mm).
3. Surface Finish-3.0: ACI 117 Class A, 1/8 inch (3.0 mm) (3.0mm).

D. Construct forms tight enough to prevent loss of concrete mortar.

1. Minimize joints.
2. Exposed Concrete: Symmetrically align joints in forms.

E. Construct removable forms for easy removal without hammering or prying against concrete surfaces.

1. Provide crush or wrecking plates where stripping may damage cast-concrete surfaces.
2. Provide top forms for inclined surfaces steeper than 1.5 horizontal to 1 vertical.
3. Install keyways, reglets, recesses, and other accessories, for easy removal.

F. Do not use rust-stained, steel, form-facing material.

G. Set edge forms, bulkheads, and intermediate screed strips for slabs to achieve required elevations and slopes in finished concrete surfaces.

1. Provide and secure units to support screed strips.
2. Use strike-off templates or compacting-type screeds.

H. Provide temporary openings for cleanouts and inspection ports where interior area of formwork is inaccessible.

1. Close openings with panels tightly fitted to forms and securely braced to prevent loss of concrete mortar.
2. Locate temporary openings in forms at inconspicuous locations.

I. [**Chamfer**] exterior corners and edges of permanently exposed concrete.

J. At construction joints, overlap forms onto previously placed concrete not less than 12 inches (305 mm)(305 mm).

K. Form openings, chases, offsets, sinkages, keyways, reglets, blocking, screeds, and bulkheads required in the Work.

1. Determine sizes and locations from trades providing such items.
2. Obtain written approval of Architect prior to forming openings not indicated on Drawings.

L. Construction and Movement Joints:

1. Construct joints true to line with faces perpendicular to surface plane of concrete.
2. Install so strength and appearance of concrete are not impaired, at locations indicated or as approved by Architect.
3. Place joints perpendicular to main reinforcement.
4. Locate joints for beams, slabs, joists, and girders in the middle third of spans.
   a. Offset joints in girders a minimum distance of twice the beam width from a beam-girder intersection.
5. Locate horizontal joints in walls and columns at underside of floors, slabs, beams, and girders and at the top of footings or floor slabs.
6. Space vertical joints in walls [**as indicated on Drawings**] .

a. Locate joints beside piers integral with walls, near corners, and in concealed locations where possible.

M. Provide temporary ports or openings in formwork where required to facilitate cleaning and inspection.

1. Locate ports and openings in bottom of vertical forms, in inconspicuous location, to allow flushing water to drain.
2. Close temporary ports and openings with tight-fitting panels, flush with inside face of form, and neatly fitted, so joints will not be apparent in exposed concrete surfaces.

N. Clean forms and adjacent surfaces to receive concrete. Remove chips, wood, sawdust, dirt, and other debris just before placing concrete.

O. Retighten forms and bracing before placing concrete, as required, to prevent mortar leaks and maintain proper alignment.

P. Coat contact surfaces of forms with form-release agent, according to manufacturer's written instructions, before placing reinforcement.

3.2 INSTALLATION OF EMBEDDED ITEMS

A. Place and secure anchorage devices and other embedded items required for adjoining work that is attached to or supported by cast-in-place concrete.

1. Use setting drawings, templates, diagrams, instructions, and directions furnished with items to be embedded.
2. Install anchor rods, accurately located, to elevations required and complying with tolerances in Section 7.5 of AISC 303.
3. Install reglets to receive waterproofing and to receive through-wall flashings in outer face of concrete frame at exterior walls, where flashing is shown at lintels, shelf angles, and other conditions.
4. Install dovetail anchor slots in concrete structures, as indicated on Drawings.
5. Clean embedded items immediately prior to concrete placement.

3.3 INSTALLATION OF WATERSTOPS

A. Flexible Waterstops: Install in construction joints and at other joints indicated to form a continuous diaphragm.

1. Install in longest lengths practicable.
2. Locate waterstops in center of joint unless otherwise indicated on Drawings.
3. Allow clearance between waterstop and reinforcing steel of not less than 2 times the largest concrete aggregate size specified in Section 03 3000 "Cast-In-Place Concrete."
4. Secure waterstops in correct position at 12 inches (305 mm) (305 mm) on center.
5. Field fabricate joints in accordance with manufacturer's instructions using heat welding.
   a. Miter corners, intersections, and directional changes in waterstops.
   b. Align center bulbs.
6. Clean waterstops immediately prior to placement of concrete.

7. Support and protect exposed waterstops during progress of the Work.

B. Self-Expanding Strip Waterstops: Install in construction joints and at other locations indicated on Drawings, according to manufacturer's written instructions, by adhesive bonding, mechanically fastening, and firmly pressing into place.

1. Install in longest lengths practicable.
2. Locate waterstops in center of joint unless otherwise indicated on Drawings.
3. Protect exposed waterstops during progress of the Work.

3.4 REMOVING AND REUSING FORMS

A. Formwork for sides of beams, walls, columns, and similar parts of the Work that does not support weight of concrete may be removed after cumulatively curing at not less than 50 deg F (10 deg C) for 24 hours after placing concrete. Concrete has to be hard enough to not be damaged by form-removal operations, and curing and protection operations need to be maintained.

1. Leave formwork for beam soffits, joists, slabs, and other structural elements that support weight of concrete in place until concrete has achieved at least 70 percent of its 28-day design compressive strength.
2. Remove forms only if shores have been arranged to permit removal of forms without loosening or disturbing shores.

B. Clean and repair surfaces of forms to be reused in the Work.

1. Split, frayed, delaminated, or otherwise damaged form-facing material are unacceptable for exposed surfaces.
2. Apply new form-release agent.

C. When forms are reused, clean surfaces, remove fins and laitance, and tighten to close joints.

1. Align and secure joints to avoid offsets.
2. Do not use patched forms for exposed concrete surfaces unless approved by Architect.

3.5 SHORING AND RESHORING INSTALLATION

A. Comply with (ACI 318M) and ACI 301 (ACI 301M) for design, installation, and removal of shoring and reshoring.

1. Do not remove shoring or reshoring until measurement of slab tolerances is complete.

B. In multistory construction, extend shoring or reshoring over a sufficient number of stories to distribute loads in such a manner that no floor or member will be excessively loaded or will induce tensile stress in concrete members without sufficient steel reinforcement.

C. Plan sequence of removal of shores and reshore to avoid damage to concrete. Locate and provide adequate reshoring to support construction without excessive stress or deflection.

3.6 FIELD QUALITY CONTROL

A. Special Inspections: Owner will engage a special inspector [**and**] [**qualified testing and inspecting agency**] to perform field tests and inspections and prepare test reports.

B. Testing Agency: Engage a qualified testing and inspecting agency to perform tests and inspections and to submit reports.

C. Inspections:

1. Inspect formwork for shape, location, and dimensions of the concrete member being formed.
2. Inspect insulating concrete forms for shape, location, and dimensions of the concrete member being formed.

END OF SECTION 03 1000

SECTION 03 2000 - CONCRETE REINFORCING

PART 1 - GENERAL

1.1 RELATED DOCUMENTS

A. Drawings and general provisions of the Contract, including General and Supplementary Conditions and Division 01 Specification Sections, apply to this Section.

1.2 SUMMARY

A. Section Includes:

1. Steel reinforcement bars.

1.3 PREINSTALLATION MEETINGS

A. Preinstallation Conference: Conduct conference at [**Project site**] .

1. Review the following:
   a. Special inspection and testing and inspecting agency procedures for field quality control.
   b. Construction contraction and isolation joints.
   c. Steel-reinforcement installation.

1.4 ACTION SUBMITTALS

A. Product Data: For the following:

1. Each type of steel reinforcement.
2. Bar supports.
3. Mechanical splice couplers.

B. Shop Drawings: Comply with ACI SP-066:

1. Include placing drawings that detail fabrication, bending, and placement.
2. Include bar sizes, lengths, materials, grades, bar schedules, stirrup spacing, bent bar diagrams, bar arrangement, location of splices, lengths of lap splices, details of mechanical splice couplers, details of welding splices, tie spacing, hoop spacing, and supports for concrete reinforcement.
3. For structural thermal break insulated connection system, indicate general configuration, insulation dimensions, tension bars, compression pads, shear bars, and dimensions.

C. Construction Joint Layout: Indicate proposed construction joints required to build the structure.

1. Location of construction joints is subject to approval of Architect.

1.5 INFORMATIONAL SUBMITTALS

A. Qualification Statements: For testing and inspection agency.

B. Material Test Reports: For the following, from a qualified testing agency:

1. Steel Reinforcement:
   a. For reinforcement to be welded, mill test analysis for chemical composition and carbon equivalent of the steel in accordance with ASTM A706/A706M.
2. Mechanical splice couplers.

C. Field quality-control reports.

D. Minutes of preinstallation conference.

1.6 QUALITY ASSURANCE

A. Testing Agency Qualifications: An independent agency, acceptable to authorities having jurisdiction, qualified in accordance with ASTM C1077 and ASTM E329 for testing indicated.

B. Welding Qualifications: Qualify procedures and personnel in accordance with AWS D1.4/D 1.4M.

C. Mockups: Reinforcing for cast-concrete formed surfaces, to demonstrate tolerances and standard of workmanship.

1. Build panel approximately 100 sq. ft. (9.3 sq. m) for formed surface in the location indicated on Drawings or, if not indicated, as directed by Architect.
2. Subject to compliance with requirements, approved mockups may become part of the completed Work if undisturbed at time of Substantial Completion.

1.7 DELIVERY, STORAGE, AND HANDLING

A. Steel Reinforcement: Deliver, store, and handle steel reinforcement to prevent bending and damage.

1. Store reinforcement to avoid contact with earth.
2. Do not allow epoxy-coated reinforcement to be stored outdoors for more than 60 days without being stored under an opaque covering.
3. Do not allow dual-coated reinforcement to be stored outdoors for more than 60 days without being stored under an opaque covering.
4. Do not allow stainless steel reinforcement to come into contact with uncoated reinforcement.

PART 2 - PRODUCTS

2.1 STEEL REINFORCEMENT

A. Reinforcing Bars: ASTM A615/A615M, Grade 60 (Grade 420) , deformed.

2.2 REINFORCEMENT ACCESSORIES

A. Joint Dowel Bars: ASTM A615/A615M, Grade 60 (Grade 420), plain-steel bars, cut true to length with ends square and free of burrs.

B. Epoxy-Coated Joint Dowel Bars: ASTM A615/A615M, Grade 60 (Grade 420), plain-steel bars, ASTM A775/A775M epoxy coated.

C. Bar Supports: Bolsters, chairs, spacers, and other devices for spacing, supporting, and fastening reinforcing bars and welded-wire reinforcement in place.

1. Manufacture bar supports from steel wire, plastic, or precast concrete in accordance with CRSI's "Manual of Standard Practice," of greater compressive strength than concrete and as follows:
   a. For concrete surfaces exposed to view, where legs of wire bar supports contact forms, use CRSI Class 1 plastic-protected steel wire, all-plastic bar supports, or CRSI Class 2 stainless steel bar supports.
   b. For epoxy-coated reinforcement, use CRSI Class 1A epoxy-coated or other dielectric-polymer-coated wire bar supports.
   c. For dual-coated reinforcement, use CRSI Class 1A epoxy-coated or other dielectric-polymer-coated wire bar supports.
   d. For zinc-coated reinforcement, use galvanized wire or dielectric-polymer-coated wire bar supports.
   e. For stainless steel reinforcement, use CRSI Class 1 plastic-protected steel wire, all-plastic bar supports, or CRSI Class 2 stainless steel bar supports.

D. Mechanical Splice Couplers: ACI 318 (ACI 318M) Type 1, same material of reinforcing bar being spliced; [**compression-only type**] [**tension-compression type**] [**dowel-bar type**] [**mechanical-lap type**].

E. Steel Tie Wire: ASTM A1064/A1064M, annealed steel, not less than 0.0508 inch (1.2908 mm) in diameter.

1. Finish: [**Plain**] .

F. Stainless Steel Tie Wire: ASTM A1022/A1022M, not less than 0.0508 inch (1.2908 mm) in diameter.

G. Epoxy Repair Coating: Liquid, two-part, epoxy repair coating; compatible with epoxy coating on reinforcement and complying with ASTM A775/A775M.

H. Zinc Repair Material: ASTM A780/A780M.

2.3 FABRICATING REINFORCEMENT

A. Fabricate steel reinforcement according to CRSI's "Manual of Standard Practice."

PART 3 - EXECUTION

3.1 PREPARATION

A. Protection of In-Place Conditions:

1. Do not cut or puncture vapor retarder.
2. Repair damage and reseal vapor retarder before placing concrete.

B. Clean reinforcement of loose rust and mill scale, earth, ice, and other foreign materials that reduce bond to concrete.

3.2 INSTALLATION OF STEEL REINFORCEMENT

A. Comply with CRSI's "Manual of Standard Practice" for placing and supporting reinforcement.

B. Accurately position, support, and secure reinforcement against displacement.

1. Locate and support reinforcement with bar supports to maintain minimum concrete cover.
2. Do not tack weld crossing reinforcing bars.

C. Preserve clearance between bars of not less than 1 inch, not less than one bar diameter, or not less than 1-1/3 times size of large aggregate, whichever is greater.

D. Provide concrete coverage in accordance with ACI 318.

E. Set wire ties with ends directed into concrete, not toward exposed concrete surfaces.

F. Splices: Lap splices as indicated on Drawings.

1. Bars indicated to be continuous, and all vertical bars to be lapped not less than 36 bar diameters at splices, or 24 inches, whichever is greater.
2. Stagger splices in accordance with ACI 318.
3. Mechanical Splice Couplers: Install in accordance with manufacturer's instructions.
4. Weld reinforcing bars in accordance with AWS D1.4/D 1.4M, where indicated on Drawings.

3.3 JOINTS

A. Construction Joints: Install so strength and appearance of concrete are not impaired, at locations indicated or as approved by Architect.

1. Place joints perpendicular to main reinforcement.
2. Continue reinforcement across construction joints unless otherwise indicated.

3. Do not continue reinforcement through sides of strip placements of floors and slabs.

B. Doweled Joints: Install dowel bars and support assemblies at joints where indicated. Lubricate or asphalt coat one-half of dowel length, to prevent concrete bonding to one side of joint.

3.4 INSTALLATION TOLERANCES

A. Comply with ACI 117.

3.5 FIELD QUALITY CONTROL

A. Special Inspections: Owner will engage a [**special inspector**] [**and**] [**qualified testing and inspecting agency**] to perform field tests and inspections and prepare test reports.

B. Testing Agency: Engage a qualified testing and inspecting agency to perform tests and inspections and to submit reports.

C. Inspections:

1. Steel-reinforcement placement.
2. Steel-reinforcement mechanical splice couplers.
3. Steel-reinforcement welding.

D. Manufacturer's Inspections: Engage manufacturer of structural thermal break insulated connection system to inspect completed installations prior to placement of concrete, and to provide written report that installation complies with manufacturer's written instructions.

END OF SECTION 03 2000

SECTION 03 3000 - CAST-IN-PLACE CONCRETE

PART 1 - GENERAL

1.1 RELATED DOCUMENTS

A. Drawings and general provisions of the Contract, including General and Supplementary Conditions and Division 01 Specification Sections, apply to this Section.

1.2 SUMMARY

A. Section Includes:

1. Cast-in-place concrete, including concrete materials, mixture design, placement procedures, and finishes.

B. Related Requirements:

1. Section 03 1000 "Concrete Forming and Accessories" for form-facing materials, form liners, insulating concrete forms, and waterstops.
2. Section 03 2000 "Concrete Reinforcing" for steel reinforcing bars and welded-wire reinforcement.
3. Section 31 2000 "Earth Moving" for drainage fill under slabs-on-ground.

1.3 DEFINITIONS

A. Cementitious Materials: Portland cement alone or in combination with one or more of the following: blended hydraulic cement, fly ash, slag cement, and other pozzolans materials subject to compliance with requirements.

B. Water/Cement Ratio (w/cm): The ratio by weight of water to cementitious materials.

1.4 PREINSTALLATION MEETINGS

A. Preinstallation Conference: Conduct conference at [**Project site**] .

1. Require representatives of each entity directly concerned with cast-in-place concrete to attend, including the following:
   a. Contractor's superintendent.
   b. Independent testing agency responsible for concrete design mixtures.
   c. Ready-mix concrete manufacturer.
   d. Concrete Subcontractor.
   e. Special concrete finish Subcontractor.
2. Review the following:
   a. Special inspection and testing and inspecting agency procedures for field quality control.

b. Construction joints, control joints, isolation joints, and joint-filler strips.
c. Semirigid joint fillers.
d. Vapor-retarder installation.
e. Anchor rod and anchorage device installation tolerances.
f. Cold and hot weather concreting procedures
g. Concrete finishes and finishing.
h. Curing procedures.
i. Forms and form-removal limitations.
j. Shoring and reshoring procedures.
k. Methods for achieving specified floor and slab flatness and levelness.
l. Floor and slab flatness and levelness measurements.
m. Concrete repair procedures.
n. Concrete protection.
o. Initial curing and field curing of field test cylinders (ASTM C31/C31M.)
p. Protection of field cured field test cylinders.

1.5 ACTION SUBMITTALS

A. Product Data: For each of the following.

1. Portland cement.
2. Fly ash.
3. Slag cement.
4. Blended hydraulic cement.
5. Silica fume.
6. Performance-based hydraulic cement
7. Aggregates.
8. Admixtures:
   a. Include limitations of use, including restrictions on cementitious materials, supplementary cementitious materials, air entrainment, aggregates, temperature at time of concrete placement, relative humidity at time of concrete placement, curing conditions, and use of other admixtures.
   b. Color pigments.
9. Vapor retarders.
10. Fiber reinforcement.
11. Liquid floor treatments.
12. Floor and slab treatments.
13. Curing materials.
    a. Include documentation from color pigment manufacturer, indicating that proposed methods of curing are recommended by color pigment manufacturer.
14. Joint fillers.
15. Repair materials.

B. Design Mixtures: For each concrete mixture, include the following:

1. Mixture identification.
2. Minimum 28-day compressive strength.
3. Durability exposure class.
4. Maximum w/cm.
5. Calculated equilibrium unit weight, for lightweight concrete.

6. Slump limit.
7. Air content.
8. Nominal maximum aggregate size.
9. Steel-fiber reinforcement content.
10. Synthetic micro-fiber content.
11. Indicate amounts of mixing water to be withheld for later addition at Project site if permitted.
12. Include manufacturer's certification that permeability-reducing admixture is compatible with mix design.
13. Include certification that dosage rate for permeability-reducing admixture matches dosage rate used in performance compliance test.
14. Intended placement method.
15. Submit alternate design mixtures when characteristics of materials, Project conditions, weather, test results, or other circumstances warrant adjustments.

C. Shop Drawings:

1. Construction Joint Layout: Indicate proposed construction joints required to construct the structure.
   a. Location of construction joints is subject to approval of the Architect.

D. Concrete Schedule: For each location of each Class of concrete indicated in "Concrete Mixtures" Article, including the following:

1. Concrete Class designation.
2. Location within Project.
3. Exposure Class designation.
4. Formed Surface Finish designation and final finish.
5. Final finish for floors.
6. Curing process.
7. Floor treatment if any.

1.6 INFORMATIONAL SUBMITTALS

A. Qualification Data: For the following:

1. Installer: Include copies of applicable ACI certificates.
2. Ready-mixed concrete manufacturer.
3. Testing agency: Include copies of applicable ACI certificates.

B. Material Certificates: For each of the following, signed by manufacturers:

1. Cementitious materials.
2. Admixtures.
3. Fiber reinforcement.
4. Curing compounds.
5. Floor and slab treatments.
6. Bonding agents.
7. Adhesives.
8. Vapor retarders.

9. Semirigid joint filler.
10. Joint-filler strips.
11. Repair materials.

C. Material Test Reports: For the following, from a qualified testing agency:

1. Portland cement.
2. Fly ash.
3. Slag cement.
4. Blended hydraulic cement.
5. Silica fume.
6. Performance-based hydraulic cement.
7. Aggregates.
8. Admixtures:
   a. Permeability-Reducing Admixture: Include independent test reports, indicating compliance with specified requirements, including dosage rate used in test.

D. Floor surface flatness and levelness measurements report, indicating compliance with specified tolerances.

E. Research Reports:

1. For concrete admixtures in accordance with ICC's Acceptance Criteria AC198.
2. For sheet vapor retarder/termite barrier, showing compliance with ICC AC380.

F. Preconstruction Test Reports: For each mix design.

G. Field quality-control reports.

H. Minutes of preinstallation conference.

1.7 QUALITY ASSURANCE

A. Installer Qualifications: A qualified installer who employs Project personnel qualified as an ACI-certified Flatwork Technician and Finisher and a supervisor who is a certified ACI Flatwork Concrete Finisher/Technician or an ACI Concrete Flatwork Technician.

1. Post-Installed Concrete Anchors Installers: ACI-certified Adhesive Anchor Installer.

B. Ready-Mixed Concrete Manufacturer Qualifications: A firm experienced in manufacturing ready-mixed concrete products and that complies with ASTM C94/C94M requirements for production facilities and equipment.

1. Manufacturer certified in accordance with NRMCA's "Certification of Ready Mixed Concrete Production Facilities."

C. Laboratory Testing Agency Qualifications: A testing agency qualified in accordance with ASTM C1077 and ASTM E329 for testing indicated and employing an ACI-certified Concrete Quality Control Technical Manager.

1. Personnel performing laboratory tests shall be an ACI-certified Concrete Strength Testing Technician and Concrete Laboratory Testing Technician, Grade I. Testing agency laboratory supervisor shall be an ACI-certified Concrete Laboratory Testing Technician, Grade II.

D. Field Quality Control Testing Agency Qualifications: An independent agency, acceptable to authorities having jurisdiction, qualified in accordance with ASTM C1077 and ASTM E329 for testing indicated.

1. Personnel conducting field tests shall be qualified as an ACI Concrete Field Testing Technician, Grade 1, in accordance with ACI CPP 610.1 or an equivalent certification program.

E. Mockups: Cast concrete slab-on-ground and formed-surface panels to demonstrate typical joints, surface finish, texture, tolerances, floor treatments, and standard of workmanship.

1. Slab-On-Ground: Build panel approximately 15 feet by 15 feet (3.35 meters by 3.35 meters) in the location indicated or, if not indicated, as directed by Architect.
   a. Divide panel into four equal panels to demonstrate saw joint cutting.
2. Formed Surfaces: Build panel approximately 100 sq. ft. (9.3 sq. m) in the location indicated or, if not indicated, as directed by Architect.
3. Subject to compliance with requirements, approved mockups may become part of the completed Work if undisturbed at time of Substantial Completion.

1.8 PRECONSTRUCTION TESTING

A. Preconstruction Testing Service: Engage a qualified testing agency to perform preconstruction testing on each concrete mixture.

1. Include the following information in each test report:
   a. Admixture dosage rates.
   b. Slump.
   c. Air content.
   d. Seven-day compressive strength.
   e. 28-day compressive strength.
   f. Permeability

1.9 DELIVERY, STORAGE, AND HANDLING

A. Comply with ASTM C94/C94M and ACI 301.

1.10 FIELD CONDITIONS

A. Cold-Weather Placement: Comply with ACI 301 and ACI 306.1.

1. Protect concrete work from physical damage or reduced strength that could be caused by frost, freezing actions, or low temperatures.

2. When average high and low temperature is expected to fall below 40 deg F (4.4 deg C) for three successive days, maintain delivered concrete mixture temperature within the temperature range required by ACI 301 (ACI 301M).
3. Do not use frozen materials or materials containing ice or snow.
4. Do not place concrete in contact with surfaces less than 35 deg F (1.7 deg C), other than reinforcing steel.
5. Do not use calcium chloride, salt, or other materials containing antifreeze agents or chemical accelerators unless otherwise specified and approved in mixture designs.

B. Hot-Weather Placement: Comply with ACI 301 (ACI 301M) and ACI 305.1(ACI 305.1M).

1. Fog-spray forms, steel reinforcement, and subgrade just before placing concrete. Keep subgrade uniformly moist without standing water, soft spots, or dry areas.

C. Maintain concrete temperature at time of discharge to not exceed 95 deg F (35 deg C).

1.11 WARRANTY

A. Manufacturer's Warranty: Manufacturer agrees to furnish replacement sheet vapor retarder/termite barrier material and accessories for sheet vapor retarder/ termite barrier and accessories that do not comply with requirements or that fail to resist penetration by termites within specified warranty period.

1. Warranty Period: 10 years from date of Substantial Completion.

PART 2 - PRODUCTS

2.1 CONCRETE, GENERAL

A. ACI Publications: Comply with ACI 301 (ACI 301M) unless modified by requirements in the Contract Documents.

2.2 CONCRETE MATERIALS

A. Source Limitations:

1. Obtain all concrete mixtures from a single ready-mixed concrete manufacturer for entire Project.
2. Obtain each type or class of cementitious material of the same brand from the same manufacturer's plant.
3. Obtain aggregate from single source.
4. Obtain each type of admixture from single source from single manufacturer.

B. Cementitious Materials:

1. Portland Cement: ASTM C150/C150M, Type I/II , [**gray**] .
2. Fly Ash: ASTM C618, Class C or F.
3. Slag Cement: ASTM C989/C989M, Grade 100 or 120.

4. Silica Fume: ASTM C1240 amorphous silica.

C. Normal-Weight Aggregates: ASTM C33/C33M, [**Class 3S**] coarse aggregate or better, graded. Provide aggregates from a single source.

1. Alkali-Silica Reaction: Comply with one of the following:
   a. Expansion Result of Aggregate: Not more than 0.04 percent at one-year when tested in accordance with ASTM C1293.
   b. Expansion Results of Aggregate and Cementitious Materials in Combination: Not more than 0.10 percent at an age of 16 days when tested in accordance with ASTM C1567.
   c. Alkali Content in Concrete: Not more than 4 lb./cu. yd. for moderately reactive aggregate or 3 lb./cu. yd. for highly reactive aggregate, when tested in accordance with ASTM C1293 and categorized in accordance with ASTM C1778, based on alkali content being calculated in accordance with ACI 301 (ACI 301M).
2. Maximum Coarse-Aggregate Size: [**1-1/2 inches**] nominal.
3. Fine Aggregate: Free of materials with deleterious reactivity to alkali in cement.

D. Lightweight Aggregate: ASTM C330/C330M, 1-inch nominal maximum aggregate size.

E. Air-Entraining Admixture: ASTM C260/C260M.

F. Chemical Admixtures: Certified by manufacturer to be compatible with other admixtures that do not contribute water-soluble chloride ions exceeding those permitted in hardened concrete. Do not use calcium chloride or admixtures containing calcium chloride.

1. Water-Reducing Admixture: ASTM C494/C494M, Type A.
2. Retarding Admixture: ASTM C494/C494M, Type B.
3. Water-Reducing and -Retarding Admixture: ASTM C494/C494M, Type D.
4. High-Range, Water-Reducing Admixture: ASTM C494/C494M, Type F.
5. High-Range, Water-Reducing and -Retarding Admixture: ASTM C494/C494M, Type G.
6. Plasticizing and Retarding Admixture: ASTM C1017/C1017M, Type II.
7. Set-Accelerating Corrosion-Inhibiting Admixture: Commercially formulated, anodic inhibitor or mixed cathodic and anodic inhibitor; capable of forming a protective barrier and minimizing chloride reactions with steel reinforcement in concrete and complying with ASTM C494/C494M, Type C.
   a. Manufacturers: Subject to compliance with requirements, available manufacturers offering products that may be incorporated into the Work include, but are not limited to the following:
      1) BASF Corporation.
      2) Euclid Chemical Company (The); an RPM company.
      3) GCP Applied Technologies Inc.
8. Non-Set-Accelerating Corrosion-Inhibiting Admixture: Commercially formulated, non-set-accelerating, anodic inhibitor or mixed cathodic and anodic inhibitor; capable of forming a protective barrier and minimizing chloride reactions with steel reinforcement in concrete.
   a. Manufacturers: Subject to compliance with requirements, available manufacturers offering products that may be incorporated into the Work include, but are not limited to the following:
      1) BASF Corporation.
      2) Cortec Corporation.

3) GCP Applied Technologies Inc.

9. Permeability-Reducing Admixture: ASTM C494/C494M, Type S, hydrophilic, permeability-reducing crystalline admixture, capable of reducing water absorption of concrete exposed to hydrostatic pressure (PRAH).
   a. Manufacturers: Subject to compliance with requirements, available manufacturers offering products that may be incorporated into the Work include, but are not limited to the following:
      1) AQUAFIN, Inc.
      2) Kryton International Inc.
   b. Permeability: No leakage when tested in accordance with U.S. Army Corps of Engineers CRC C48 at a hydraulic pressure of 200 psi (1.28 MPa) for 14 days.

G. Water and Water Used to Make Ice: ASTM C94/C94M, potable [**or**] [**complying with ASTM C1602/C1602M, including all limits listed in Table 2 and the requirements of paragraph 5.4**]

1. Manufacturers: Subject to compliance with requirements, available manufacturers offering products that may be incorporated into the Work include, but are not limited to the following:
   a. Alabama Pigments Company, LLC.
   b. BASF Corporation.
   c. Bon Tool Co.
   d. Bon Tool Co.
   e. Butterfield Color, Inc.
   f. Dynamic Color Solutions, Inc.
   g. Euclid Chemical Company (The); an RPM company.
   h. Hoover Color Corporation.
   i. Lambert Corporation.
   j. LANXESS Corporation.
   k. Matcrete Inc.
   l. NewLook International, Inc.
   m. Proline Concrete Tools, Inc.
   n. QC Construction Products.
   o. Scofield, a Business Unit of Sika Corporation.
   p. Solomon Colors, Inc.
   q. Stampcrete International, Ltd.
   r. SureCrete Design Products.
2. Color: As selected by Architect from manufacturer's full range.

H. Water and Water Used to Make Ice: ASTM C94/C94M, potable.

2.3 FIBER REINFORCEMENT

A. Synthetic Monofilament Micro-Fiber: Monofilament polypropylene micro-fibers engineered and designed for use in concrete, complying with ASTM C1116/C1116M, Type III, 1/2 to 1-1/2 inches (13 to 38 mm) long.

1. Manufacturers: Subject to compliance with requirements, available manufacturers offering products that may be incorporated into the Work include, but are not limited to the following:

a. ABC Polymer Industries, LLC.
b. BASF Corporation.
c. Euclid Chemical Company (The); an RPM company.
d. GCP Applied Technologies Inc.
e. Propex Operating Company, LLC.

B. Synthetic Fibrillated Micro-Fiber: Fibrillated polypropylene micro-fibers engineered and designed for use in concrete, complying with ASTM C1116/C1116M, Type III, 1/2 to 1-1/2 inches (13 to 38 mm) long.

1. Manufacturers: Subject to compliance with requirements, available manufacturers offering products that may be incorporated into the Work include, but are not limited to the following:
   a. ABC Polymer Industries, LLC.
   b. BASF Corporation.
   c. Euclid Chemical Company (The); an RPM company.
   d. GCP Applied Technologies Inc.
   e. Propex Operating Company, LLC.

C. Synthetic Macro-Fiber: Synthetic macro-fibers engineered and designed for use in concrete, complying with ASTM C1116/C1116M, Type III, 1 to 2-1/4 inches (25 to 57 mm) long.

1. Manufacturers: Subject to compliance with requirements, available manufacturers offering products that may be incorporated into the Work include, but are not limited to the following:
   a. ABC Polymer Industries, LLC.
   b. Euclid Chemical Company (The); an RPM company.
   c. GCP Applied Technologies Inc.
   d. Propex Operating Company, LLC.

2.4 VAPOR RETARDERS

A. Sheet Vapor Retarder, Class A: ASTM E1745, Class A [**, except with maximum water-vapor permeance of**] <**Insert rating**>; not less than 10 mils thick. Include manufacturer's recommended adhesive or pressure-sensitive tape.

1. Manufacturers: Subject to compliance with requirements, available manufacturers offering products that may be incorporated into the Work include, but are not limited to the following:
   a. Barrier-Bac; Inteplast Group, Ltd.
   b. Fortifiber Building Systems Group.
   c. ISI Building Products.
   d. Poly-America, L.P.
   e. Raven Industries, Inc.
   f. Reef Industries, Inc.
   g. Stego Industries, LLC.
   h. Tex-Trude.

B. Sheet Vapor Retarder, Class C: ASTM E1745, Class C; not less than 10 mils (0.25 mm) thick. Include manufacturer's recommended adhesive or pressure-sensitive joint tape.

1. Manufacturers: Subject to compliance with requirements, available manufacturers offering products that may be incorporated into the Work include, but are not limited to the following:
    a. ISI Building Products.
    b. Stego Industries, LLC.

C. Sheet Vapor Retarder/Termite Barrier: ASTM E1745, Class A, except with maximum water-vapor permeance of 0.03 perms; complying with ICC AC380. Include manufacturer's recommended adhesive or pressure-sensitive tape.

1. Manufacturers: Subject to compliance with requirements, available manufacturers offering products that may be incorporated into the Work include, but are not limited to the following:
    a. Polyguard Products, Inc.
2. Low-Temperature Flexibility: Pass at minus 15 deg F (minus 26 deg C); ASTM D146/D146M.
3. Puncture Resistance: 224 lbf (996 N) minimum; ASTM E154/E154M.
4. Water Absorption: 0.1 percent weight-gain maximum after 48-hour immersion at 70 deg F (21 deg C); ASTM D570.
5. Hydrostatic-Head Resistance: 231 feet (70 m) minimum; ASTM D5385.

D. Bituminous Vapor Retarder: ASTM E1993/E1993M, 110-mil- (2.8-mm-) thick, semiflexible, seven-ply sheet membrane, consisting of reinforced core and carrier sheet with fortified asphalt layers, protective weather coating, and removable plastic release liner. Furnish manufacturer's accessories, including bonding asphalt, pointing mastics, and self-adhering joint tape.

1. Manufacturers: Subject to compliance with requirements, available manufacturers offering products that may be incorporated into the Work include, but are not limited to the following:
    a. Tensile Strength: 156 lbf/inch (27.35 kN/m) when tested in accordance with ASTM E154/E154M.
2. Puncture Resistance: 140 lbf (662N) when tested in accordance with ASTM E154/E154M.

2.5 LIQUID FLOOR TREATMENTS

A. Penetrating Liquid Floor Treatment: Clear, chemically reactive, waterborne solution of inorganic silicate or siliconate materials and proprietary components; odorless; that penetrates, hardens, and densifies concrete surfaces.

1. Manufacturers: Subject to compliance with requirements, available manufacturers offering products that may be incorporated into the Work include, but are not limited to the following:
    a. BASF Corporation.
    b. ChemMasters, Inc.
    c. ChemTec International.
    d. Concrete Sealers USA.
    e. Curecrete Distribution Inc.
    f. Dayton Superior.
    g. Euclid Chemical Company (The); an RPM company.
    h. Kaufman Products, Inc.

i. Laticrete International, Inc.
j. NewLook International, Inc.
k. Nox-Crete Products Group.
l. PROSOCO, Inc.
m. SpecChem, LLC.
n. US SPEC, Division of US MIX Company.
o. Vexcon Chemicals Inc.
p. V-Seal Concrete Sealers & Specialty Coatings.

2.6 CURING MATERIALS

A. Evaporation Retarder: Waterborne, monomolecular film forming, manufactured for application to fresh concrete.

1. Manufacturers: Subject to compliance with requirements, available manufacturers offering products that may be incorporated into the Work include, but are not limited to the following:
   a. BASF Corporation.
   b. Bon Tool Co.
   c. Brickform; a division of Solomon Colors.
   d. ChemMasters, Inc.
   e. Dayton Superior.
   f. Euclid Chemical Company (The); an RPM company.
   g. Kaufman Products, Inc.
   h. Lambert Corporation.
   i. Laticrete International, Inc.
   j. Metalcrete Industries.
   k. Nox-Crete Products Group.
   l. Sika Corporation.
   m. SpecChem, LLC.
   n. TK Products.
   o. Vexcon Chemicals Inc.

B. Absorptive Cover: AASHTO M 182, Class 2, burlap cloth made from jute or kenaf, weighing approximately 9 oz./sq. yd. when dry.

C. Moisture-Retaining Cover: ASTM C171, polyethylene film burlap-polyethylene sheet.

1. Color:
   a. Ambient Temperature Below 50 deg F: Black.
   b. Ambient Temperature between 50 deg F and 85 deg F: Any color.
   c. Ambient Temperature Above 85 deg F: White.

D. Curing Paper: 8-feet- wide paper, consisting of two layers of fibered kraft paper laminated with double coating of asphalt.

1. Manufacturers: Subject to compliance with requirements, available manufacturers offering products that may be incorporated into the Work include, but are not limited to the following:
   a. Fortifiber Building Systems Group.

E. Water: Potable or complying with ASTM C1602/C1602M.

F. Clear, Waterborne, Membrane-Forming, Dissipating Curing Compound: ASTM C309, Type 1, Class B.

1. Manufacturers: Subject to compliance with requirements, available manufacturers offering products that may be incorporated into the Work include, but are not limited to the following:
   a. Anti-Hydro International, Inc.
   b. ChemMasters, Inc.
   c. Dayton Superior.
   d. Euclid Chemical Company (The); an RPM company.
   e. Kaufman Products, Inc.
   f. Lambert Corporation.
   g. Laticrete International, Inc.
   h. Nox-Crete Products Group.
   i. SpecChem, LLC.
   j. TK Products.
   k. Vexcon Chemicals Inc.

G. Clear, Waterborne, Membrane-Forming, Nondissipating Curing Compound: ASTM C309, Type 1, Class B , certified by curing compound manufacturer to not interfere with bonding of floor covering.

1. Manufacturers: Subject to compliance with requirements, available manufacturers offering products that may be incorporated into the Work include, but are not limited to the following:
   a. Anti-Hydro International, Inc.
   b. BASF Corporation.
   c. ChemMasters, Inc.
   d. Dayton Superior.
   e. Euclid Chemical Company (The); an RPM company.
   f. Kaufman Products, Inc.
   g. Lambert Corporation.
   h. Laticrete International, Inc.
   i. Metalcrete Industries.
   j. Nox-Crete Products Group.
   k. SpecChem, LLC.
   l. TK Products.
   m. Vexcon Chemicals Inc.

H. Clear, Waterborne, Membrane-Forming, Curing Compound: ASTM C309, Type 1, Class B, 18 to 25 percent solids, nondissipating, certified by curing compound manufacturer to not interfere with bonding of floor covering.

1. Manufacturers: Subject to compliance with requirements, available manufacturers offering products that may be incorporated into the Work include, but are not limited to the following:
   a. BASF Corporation.
   b. ChemMasters, Inc.
   c. Dayton Superior.

d. Euclid Chemical Company (The); an RPM company.
e. Kaufman Products, Inc.
f. Lambert Corporation.
g. Laticrete International, Inc.
h. Metalcrete Industries.
i. Nox-Crete Products Group.
j. SpecChem, LLC.
k. Vexcon Chemicals Inc.
l. V-Seal Concrete Sealers & Specialty Coatings.

I. Clear, Solvent-Borne, Membrane-Forming, Curing and Sealing Compound: ASTM C1315, Type 1, Class A.

1. Manufacturers: Subject to compliance with requirements, available manufacturers offering products that may be incorporated into the Work include, but are not limited to the following:
   a. ChemMasters, Inc.
   b. Concrete Sealers USA.
   c. Dayton Superior.
   d. Euclid Chemical Company (The); an RPM company.
   e. Kaufman Products, Inc.
   f. Lambert Corporation.
   g. Laticrete International, Inc.
   h. Metalcrete Industries.
   i. Nox-Crete Products Group.
   j. Right Pointe.
   k. SpecChem, LLC.
   l. TK Products.
   m. Vexcon Chemicals Inc.
2. BASF Corporation.

J. Clear, Waterborne, Membrane-Forming, Curing and Sealing Compound: ASTM C1315, Type 1, Class A.

1. Manufacturers: Subject to compliance with requirements, available manufacturers offering products that may be incorporated into the Work include, but are not limited to the following:
   a. ChemMasters, Inc.
   b. Concrete Sealers USA.
   c. Dayton Superior.
   d. Euclid Chemical Company (The); an RPM company.
   e. Kaufman Products, Inc.
   f. Lambert Corporation.
   g. Laticrete International, Inc.
   h. Metalcrete Industries.
   i. Nox-Crete Products Group.
   j. Right Pointe.
   k. SpecChem, LLC.
   l. TK Products.
   m. Vexcon Chemicals Inc.

2.7 RELATED MATERIALS

A. Expansion- and Isolation-Joint-Filler Strips: [**ASTM D1751, asphalt-saturated cellulosic fiber**], [**ASTM D1752, cork or self-expanding cork**].

B. Semirigid Joint Filler: Two-component, semirigid, 100 percent solids, epoxy resin with a Type A shore durometer hardness of 80 in accordance with ASTM D2240.

C. Bonding Agent: ASTM C1059/C1059M, Type II, nonredispersible, acrylic emulsion or styrene butadiene.

D. Epoxy Bonding Adhesive: ASTM C881, two-component epoxy resin, capable of humid curing and bonding to damp surfaces, of class suitable for application temperature and of grade and class to suit requirements, and as follows:

1. Types IV and V, load bearing, for bonding hardened or freshly mixed concrete to hardened concrete.

E. Floor Slab Protective Covering: 8-feet- wide cellulose fabric.

1. Manufacturers: Subject to compliance with requirements, available manufacturers offering products that may be incorporated into the Work include, but are not limited to the following:
   a. McTech Group, Inc.

2.8 REPAIR MATERIALS

A. Repair Underlayment: Cement-based, polymer-modified, self-leveling product that can be applied in thicknesses from 1/8 inch (3 mm) and that can be feathered at edges to match adjacent floor elevations.

1. Cement Binder: ASTM C150/C150M portland cement or hydraulic or blended hydraulic cement, as defined in ASTM C219.
2. Primer: Product of underlayment manufacturer recommended for substrate, conditions, and application.
3. Aggregate: Well-graded, washed gravel, 1/8 to 1/4 inch (3 to 6 mm) or coarse sand, as recommended by underlayment manufacturer.
4. Compressive Strength: Not less than 4100 psi (29 MPa) at 28 days when tested in accordance with ASTM C109/C109M.

B. Repair Overlayment: Cement-based, polymer-modified, self-leveling product that can be applied in thicknesses from 1/4 inch (6 mm) and that can be filled in over a scarified surface to match adjacent floor elevations.

1. Cement Binder: ASTM C150/C150M portland cement or hydraulic or blended hydraulic cement, as defined in ASTM C219.
2. Primer: Product of topping manufacturer recommended for substrate, conditions, and application.
3. Aggregate: Well-graded, washed gravel, 1/8 to 1/4 inch (3.2 to 6 mm) or coarse sand as recommended by topping manufacturer.

4. Compressive Strength: Not less than 5000 psi (34.5 MPa) at 28 days when tested in accordance with ASTM C109/C109M.

2.9 CONCRETE MIXTURES, GENERAL

A. Prepare design mixtures for each type and strength of concrete, proportioned on the basis of laboratory trial mixture or field test data, or both, in accordance with ACI 301 (ACI 301M).

1. Use a qualified testing agency for preparing and reporting proposed mixture designs, based on laboratory trial mixtures.

B. Cementitious Materials: Limit percentage, by weight, of cementitious materials other than portland cement in concrete as follows:

1. Fly Ash or Other Pozzolans: 25 percent by mass.
2. Slag Cement: 50 percent by mass.
3. Silica Fume: 10 percent by mass.
4. Total of Fly Ash or Other Pozzolans, Slag Cement: 50 percent by mass, with fly ash or pozzolans not exceeding 10 percent by mass.
5. Total of Fly Ash or Other Pozzolans: 35 percent by mass with fly ash or pozzolans not exceeding 25 percent by mass and silica fume not exceeding 10 percent mass.

C. Admixtures: Use admixtures in accordance with manufacturer's written instructions.

1. Use [**water-reducing**] [**high-range water-reducing**] [**or**] [**plasticizing**] admixture in concrete, as required, for placement and workability.
2. Use water-reducing and -retarding admixture when required by high temperatures, low humidity, or other adverse placement conditions.
3. Use water-reducing admixture in [**pumped concrete,**] [**and**] [**concrete with a w/cm below 0.50**].
4. Use corrosion-inhibiting admixture in concrete mixtures where indicated.
5. Use permeability-reducing admixture in concrete mixtures where indicated.

D. Color Pigment: Add color pigment to concrete mixture in accordance with manufacturer's written instructions and to result in hardened concrete color consistent with approved mockup.

2.10 CONCRETE MIXTURES

A. Class A : Normal-weight concrete used for footings, grade beams, and tie beams.

1. Exposure Class: ACI 318 (ACI 318M) [**F2**], [**S0**] , [**W0**]and [**C0**] .
2. Minimum Compressive Strength: at 28 days.
3. Maximum w/cm: [**0.50**] 0.40 .
4. Slump Limit: [**8 inches , plus or minus 1 inch for concrete with verified slump of 3 inches plus or minus 1 inch before adding high-range water-reducing admixture or plasticizing admixture at Project site**] .
5. Slump Flow Limit: [**22 inches , plus or minus 1.5 inches**] .
6. Air Content:

a. Exposure Classes F2 and F3: [**5.5 percent, plus or minus 1.5 percent at point of delivery for concrete containing 1-1/2-inch nominal maximum aggregate size**].

7. Limit water-soluble, chloride-ion content in hardened concrete to [**1.00**] [**0.30**] [**0.15**] <**Insert number**> percent by weight of cement.

B. Class [**B**] : Normal-weight concrete used for foundation walls.

1. Exposure Class: ACI 318 (ACI 318M) F2, S0, W0 and C0.
2. Minimum Compressive Strength: As indicated at 28 days.
3. Maximum w/cm: 0.50.
4. Slump Limit: 8 inches (200 mm), plus or minus 1 inch (25 mm) for concrete with verified slump of 3 inches (75 mm), plus or minus 1 inch (25 mm),before adding high-range water-reducing admixture or plasticizing admixture at Project site.
5. Slump Flow Limit: 22 inches (550 mm), plus or minus 1.5 inches (40 mm).
6. Air Content:
   a. Exposure Classes F2 and F3: 5.5 percent, plus or minus 1.5 percent at point of delivery for concrete containing 1-1/2-inch (38-mm) nominal maximum aggregate size.
7. Limit water-soluble, chloride-ion content in hardened concrete to 1.00 percent by weight of cement.

C. Class [**C**] : Normal-weight concrete used for interior slabs-on-ground.

1. Exposure Class: ACI 318 (ACI 318M) F0, S0, W0 and C0.
2. Minimum Compressive Strength: As indicated at 28 days.
3. Maximum w/cm: 0.50.
4. Minimum Cementitious Materials Content: 470 lb/cu. yd. (279 kg/cu. m).
5. Slump Limit: 8 inches (200 mm), plus or minus 1 inch (25 mm) for concrete with verified slump of 3 inches (75 mm), plus or minus 1 inch (25 mm),before adding high-range water-reducing admixture or plasticizing admixture at Project site.
6. Slump Flow Limit: 22 inches (550 mm), plus or minus 1.5 inches (40 mm).
7. Air Content:
   a. Do not use an air-entraining admixture or allow total air content to exceed 3 percent for concrete used in trowel-finished floors.
8. Limit water-soluble, chloride-ion content in hardened concrete to 1.00 percent by weight of cement.
9. Synthetic Micro-Fiber: Uniformly disperse in concrete mixture at manufacturer's recommended rate, but not less than a rate of 1.0 lb/cu. yd. (0.60 kg/cu. m).
10. Synthetic Macro-Fiber: Uniformly disperse in concrete mixture at manufacturer's recommended rate, but not less than a rate of 4.0 lb/cu. yd. (2.4 kg/cu. m).

D. Class D: Normal-weight concrete used for building frame members.

1. Exposure Class: ACI 318 (ACI 318M) F1, S0, W0 and C0.
2. Minimum Compressive Strength: As indicated at 28 days.
3. Maximum w/cm: 0.50.
4. Slump Limit: 8 inches (200 mm), plus or minus 1 inch (25 mm) for concrete with verified slump of 3 inches (75 mm), plus or minus 1 inch (25 mm),before adding high-range water-reducing admixture or plasticizing admixture at Project site.
5. Slump Flow Limit: 22 inches (550 mm), plus or minus 1.5 inches (40 mm).
6. Air Content:

a. Exposure Class F1: 4.5 percent, plus or minus 1.5 percent at point of delivery for concrete containing 1-1/2-inch (38-mm) nominal maximum aggregate size.

7. Limit water-soluble, chloride-ion content in hardened concrete to 1.00 percent by weight of cement.

E. Class E: Normal-weight concrete used for building walls.

1. Exposure Class: ACI 318 (ACI 318M) F1, S0, W0, C0.
2. Minimum Compressive Strength: As indicated at 28 days.
3. Maximum w/cm: 0.50.
4. Slump Limit: 8 inches (200 mm), plus or minus 1 inch (25 mm) for concrete with verified slump of 3 inches (75 mm), plus or minus 1 inch (25 mm),before adding high-range water-reducing admixture or plasticizing admixture at Project site.
5. Slump Flow Limit: 22 inches (550 mm), plus or minus 1.5 inches (40 mm).
6. Air Content:
   a. Exposure Class F1: 4.5 percent, plus or minus 1.5 percent at point of delivery for concrete containing 1-1/2-inch (38-mm) nominal maximum aggregate size.
7. Limit water-soluble, chloride-ion content in hardened concrete to 1.00 percent by weight of cement.

2.11 CONCRETE MIXING

A. Ready-Mixed Concrete: Measure, batch, mix, and deliver concrete in accordance with ASTM C94/C94M [**and ASTM C1116/C1116M**], and furnish batch ticket information.

B. Project-Site Mixing: Measure, batch, and mix concrete materials and concrete in accordance with ASTM C94/C94M. Mix concrete materials in appropriate drum-type batch machine mixer.

1. For mixer capacity of 1 cu. yd. or smaller, continue mixing at least 1-1/2 minutes, but not more than five minutes after ingredients are in mixer, before any part of batch is released.
2. For mixer capacity larger than 1 cu. yd., increase mixing time by 15 seconds for each additional 1 cu. yd..
3. Provide batch ticket for each batch discharged and used in the Work, indicating Project identification name and number, date, mixture type, mixture time, quantity, and amount of water added. Record approximate location of final deposit in structure.

PART 3 - EXECUTION

3.1 EXAMINATION

A. Verification of Conditions:

1. Before placing concrete, verify that installation of concrete forms, accessories, and reinforcement, and embedded items is complete and that required inspections have been performed.
2. Do not proceed until unsatisfactory conditions have been corrected.

3.2 PREPARATION

A. Provide reasonable auxiliary services to accommodate field testing and inspections, acceptable to testing agency, including the following:

1. Daily access to the Work.
2. Incidental labor and facilities necessary to facilitate tests and inspections.
3. Secure space for storage, initial curing, and field curing of test samples, including source of water and continuous electrical power at Project site during site curing period for test samples.
4. Security and protection for test samples and for testing and inspection equipment at Project site.

3.3 INSTALLATION OF EMBEDDED ITEMS

A. Place and secure anchorage devices and other embedded items required for adjoining Work that is attached to or supported by cast-in-place concrete.

1. Use setting drawings, templates, diagrams, instructions, and directions furnished with items to be embedded.
2. Install anchor rods, accurately located, to elevations required and complying with tolerances in Section 7.5 of ANSI/AISC 303.
3. Install reglets to receive waterproofing and to receive through-wall flashings in outer face of concrete frame at exterior walls, where flashing is shown at lintels, shelf angles, and other conditions.

3.4 INSTALLATION OF VAPOR RETARDER

A. Sheet Vapor Retarders: Place, protect, and repair sheet vapor retarder in accordance with ASTM E1643 and manufacturer's written instructions.

1. Install vapor retarder with longest dimension parallel with direction of concrete pour.
2. Face laps away from exposed direction of concrete pour.
3. Lap vapor retarder over footings and grade beams not less than 6 inches, sealing vapor retarder to concrete.
4. Lap joints 6 inches and seal with manufacturer's recommended tape.
5. Terminate vapor retarder at the top of floor slabs, grade beams, and pile caps, sealing entire perimeter to floor slabs, grade beams, foundation walls, or pile caps.
6. Seal penetrations in accordance with vapor retarder manufacturer's instructions.
7. Protect vapor retarder during placement of reinforcement and concrete.
   a. Repair damaged areas by patching with vapor retarder material, overlapping damages area by 6 inches on all sides, and sealing to vapor retarder.

B. Bituminous Vapor Retarders: Place, protect, and repair bituminous vapor retarder in accordance with manufacturer's written instructions.

3.5 JOINTS

A. Construct joints true to line, with faces perpendicular to surface plane of concrete.

B. Construction Joints: Coordinate with floor slab pattern and concrete placement sequence.

1. Install so strength and appearance of concrete are not impaired, at locations indicated on Drawings or as approved by Architect.
2. Place joints perpendicular to main reinforcement.
   a. Continue reinforcement across construction joints unless otherwise indicated.
   b. Do not continue reinforcement through sides of strip placements of floors and slabs.
3. Form keyed joints as indicated. Embed keys at least 1-1/2 inches into concrete.
4. Locate joints for beams, slabs, joists, and girders at third points of spans. Offset joints in girders a minimum distance of twice the beam width from a beam-girder intersection.
5. Locate horizontal joints in walls and columns at underside of floors, slabs, beams, and girders and at the top of footings or floor slabs.
6. Space vertical joints in walls [**as indicated on Drawings**] . Unless otherwise indicated on Drawings, locate vertical joints beside piers integral with walls, near corners, and in concealed locations where possible.
7. Use a bonding agent at locations where fresh concrete is placed against hardened or partially hardened concrete surfaces.
8. Use epoxy-bonding adhesive at locations where fresh concrete is placed against hardened or partially hardened concrete surfaces.

C. Control Joints in Slabs-on-Ground: Form weakened-plane control joints, sectioning concrete into areas as indicated. Construct control joints for a depth equal to at least [**one-fourth**] of concrete thickness as follows:

1. Grooved Joints: Form control joints after initial floating by grooving and finishing each edge of joint to a radius of 1/8 inch. Repeat grooving of control joints after applying surface finishes. Eliminate groover tool marks on concrete surfaces.
2. Sawed Joints: Form control joints with power saws equipped with shatterproof abrasive or diamond-rimmed blades. Cut 1/8-inch- wide joints into concrete when cutting action does not tear, abrade, or otherwise damage surface and before concrete develops random cracks.

D. Isolation Joints in Slabs-on-Ground: After removing formwork, install joint-filler strips at slab junctions with vertical surfaces, such as column pedestals, foundation walls, grade beams, and other locations, as indicated.

1. Extend joint-filler strips full width and depth of joint, terminating flush with finished concrete surface unless otherwise indicated on Drawings.
2. Terminate full-width joint-filler strips not less than 1/2 inch or more than 1 inch below finished concrete surface, where joint sealants, specified in Section 07 9200 "Joint Sealants," are indicated.
3. Install joint-filler strips in lengths as long as practicable. Where more than one length is required, lace or clip sections together.

E. Doweled Joints:

1. Install dowel bars and support assemblies at joints where indicated on Drawings.

2. Lubricate or asphalt coat one-half of dowel bar length to prevent concrete bonding to one side of joint.

F. Dowel Plates: Install dowel plates at joints where indicated on Drawings.

3.6 CONCRETE PLACEMENT

A. Before placing concrete, verify that installation of formwork, reinforcement, embedded items, and vapor retarder is complete and that required inspections are completed.

1. Immediately prior to concrete placement, inspect vapor retarder for damage and deficient installation, and repair defective areas.
2. Provide continuous inspection of vapor retarder during concrete placement and make necessary repairs to damaged areas as Work progresses.

B. Notify Architect and testing and inspection agencies 24 hours prior to commencement of concrete placement.

C. Do not add water to concrete during delivery, at Project site, or during placement unless approved by Architect in writing, but not to exceed the amount indicated on the concrete delivery ticket.

1. Do not add water to concrete after adding high-range water-reducing admixtures to mixture.

D. Before test sampling and placing concrete, water may be added at Project site, subject to limitations of ACI 301 (ACI 301M), but not to exceed the amount indicated on the concrete delivery ticket.

1. Do not add water to concrete after adding high-range water-reducing admixtures to mixture.

E. Deposit concrete continuously in one layer or in horizontal layers of such thickness that no new concrete is placed on concrete that has hardened enough to cause seams or planes of weakness.

1. If a section cannot be placed continuously, provide construction joints as indicated.
2. Deposit concrete to avoid segregation.
3. Deposit concrete in horizontal layers of depth not to exceed formwork design pressures and in a manner to avoid inclined construction joints.
4. Consolidate placed concrete with mechanical vibrating equipment in accordance with ACI 301 (ACI 301M).
   a. Do not use vibrators to transport concrete inside forms.
   b. Insert and withdraw vibrators vertically at uniformly spaced locations to rapidly penetrate placed layer and at least 6 inches into preceding layer.
   c. Do not insert vibrators into lower layers of concrete that have begun to lose plasticity.
   d. At each insertion, limit duration of vibration to time necessary to consolidate concrete, and complete embedment of reinforcement and other embedded items without causing mixture constituents to segregate.

F. Deposit and consolidate concrete for floors and slabs in a continuous operation, within limits of construction joints, until placement of a panel or section is complete.

1. Do not place concrete floors and slabs in a checkerboard sequence.
2. Consolidate concrete during placement operations, so concrete is thoroughly worked around reinforcement and other embedded items and into corners.
3. Maintain reinforcement in position on chairs during concrete placement.
4. Screed slab surfaces with a straightedge and strike off to correct elevations.
5. Level concrete, cut high areas, and fill low areas.
6. Slope surfaces uniformly to drains where required.
7. Begin initial floating using bull floats or darbies to form a uniform and open-textured surface plane, before excess bleedwater appears on the surface.
8. Do not further disturb slab surfaces before starting finishing operations.

3.7 FINISHING FORMED SURFACES

A. As-Cast Surface Finishes:

1. ACI 301 (ACI 301M) Surface Finish SF-1.0: As-cast concrete texture imparted by form-facing material.
   a. Patch voids larger than 1-1/2 inches wide or 1/2 inch deep.
   b. Remove projections larger than 1 inch.
   c. Tie holes do not require patching.
   d. Surface Tolerance: ACI 117 (ACI 117M) Class D.
   e. Apply to concrete surfaces not exposed to public view .
2. ACI 301 (ACI 301M) Surface Finish SF-2.0: As-cast concrete texture imparted by form-facing material, arranged in an orderly and symmetrical manner with a minimum of seams.
   a. Patch voids larger than 3/4 inch wide or 1/2 inch deep.
   b. Remove projections larger than 1/4 inch.
   c. Patch tie holes.
   d. Surface Tolerance: ACI 117 (ACI 117M) Class B.
   e. Locations: Apply to concrete surfaces exposed to public view.

B. Related Unformed Surfaces:

1. At tops of walls, horizontal offsets, and similar unformed surfaces adjacent to formed surfaces, strike off smooth and finish with a color and texture matching adjacent formed surfaces.
2. Continue final surface treatment of formed surfaces uniformly across adjacent unformed surfaces unless otherwise indicated.

3.8 FINISHING FLOORS AND SLABS

A. Scratch Finish:

1. While still plastic, texture concrete surface that has been screeded and bull-floated or darbied.
2. Use stiff brushes, brooms, or rakes to produce a profile depth of 1/4 inch in one direction.

3. Apply scratch finish to surfaces to receive mortar setting beds for bonded cementitious floor finishes .

B. Float Finish:

1. When bleedwater sheen has disappeared and concrete surface has stiffened sufficiently to permit operation of specific float apparatus, consolidate concrete surface with power-driven floats or by hand floating if area is small or inaccessible to power-driven floats.
2. Repeat float passes and restraightening until surface is left with a uniform, smooth, granular texture and complies with ACI 117 tolerances for conventional concrete.
3. Apply float finish to surfaces [**to receive trowel finish**] [**and**] [**to be covered with fluid-applied or sheet waterproofing, built-up or membrane roofing, or sand-bed terrazzo**] .

C. Trowel Finish:

1. After applying float finish, apply first troweling and consolidate concrete by hand or power-driven trowel.
2. Continue troweling passes and restraighten until surface is free of trowel marks and uniform in texture and appearance.
3. Grind smooth any surface defects that would telegraph through applied coatings or floor coverings.
4. Do not add water to concrete surface.
5. Do not apply hard-troweled finish to concrete, which has a total air content greater than 3 percent.
6. Apply a trowel finish to surfaces [**exposed to view**] [**or**] [**to be covered with resilient flooring, carpet, ceramic or quarry tile set over a cleavage membrane, paint, or another thin-film-finish coating system**] .
7. Finish surfaces to the following tolerances, in accordance with ASTM E1155 (ASTM E1155M), for a randomly trafficked floor surface:
   a. Slabs on Ground:
      1) Finish and measure surface so gap at any point between concrete surface and an unleveled, freestanding, 10-ft.- (3.05-m-) long straightedge resting on two high spots and placed anywhere on the surface does not exceed [1/4 inch (6 mm)] [3/16 inch (4.8 mm)] [1/8 inch (3 mm)] [1/8 inch (3 mm) and)1/16 inch (1.6 mm) in 2 feet (610 mm)].
      2) Specified overall values of flatness, FF 25; and of levelness, FL 20; with minimum local values of flatness, FF 17; and of levelness, FL 15.
      3) Specified overall values of flatness, FF 35; and of levelness, FL 25; with minimum local values of flatness, FF 24; and of levelness, FL 17.
      4) Specified overall values of flatness, FF 45; and of levelness, FL 35; with minimum local values of flatness, FF 30; and of levelness, FL 24.
      5) Specified Overall Value (SOV): FF 50 and FL 25 with minimum local value (MLV): FF 40 and FL 17.
      6) Specified Overall Value (SOV): FF 25 and FL 20 with minimum local value (MLV): FF 17 and FL 15.

D. Trowel and Fine-Broom Finish: Apply a first trowel finish to surfaces [**where ceramic or quarry tile is to be installed by either thickset or thinset method**]. While concrete is still plastic, slightly scarify surface with a fine broom perpendicular to main traffic route.

1. Coordinate required final finish with Architect before application.
2. Comply with flatness and levelness tolerances for trowel-finished floor surfaces.

E. Broom Finish: Apply a broom finish to exterior concrete platforms, steps, ramps, and locations indicated on Drawings.

1. Immediately after float finishing, slightly roughen trafficked surface by brooming with fiber-bristle broom perpendicular to main traffic route.
2. Coordinate required final finish with Architect before application.

F. Slip-Resistive Finish: Before final floating, apply slip-resistive [**aggregate**] finish to concrete stair treads, platforms, ramps as indicated on Drawings

1. Apply in accordance with manufacturer's written instructions and as follows:
   a. Uniformly spread [**25 lb/100 sq. ft.**] of dampened slip-resistive [**aggregate**] over surface in one or two applications.
   b. Tamp aggregate flush with surface, but do not force below surface.
   c. After broadcasting and tamping, apply float finish.
   d. After curing, lightly work surface with a steel wire brush or an abrasive stone and water to expose slip-resistive aggregate .

G. Dry-Shake Floor Hardener Finish: After initial floating, apply dry-shake floor hardener to surfaces in accordance with manufacturer's written instructions and as follows:

1. Uniformly distribute approximately two-thirds of dry-shake floor hardener over surface by hand or with mechanical spreader, and embed by power floating.
2. Follow power floating with a second dry-shake floor hardener application, uniformly distributing remainder of material, and embed by power floating.
3. After final floating, apply a trowel finish.
4. Cure concrete with curing compound recommended by dry-shake floor hardener manufacturer and apply immediately after final finishing.

H. Uniformly apply dry-shake floor hardener at a rate of 100 lb/100 sq. ft. (49 kg/10 sq. m) unless greater amount is recommended by manufacturer.

3.9 INSTALLATION OF MISCELLANEOUS CONCRETE ITEMS

A. Filling In:

1. Fill in holes and openings left in concrete structures after Work of other trades is in place unless otherwise indicated.
2. Mix, place, and cure concrete, as specified, to blend with in-place construction.
3. Provide other miscellaneous concrete filling indicated or required to complete the Work.

B. Curbs: Provide monolithic finish to interior curbs by stripping forms while concrete is still green and by steel-troweling surfaces to a hard, dense finish with corners, intersections, and terminations slightly rounded.

C. Equipment Bases and Foundations:

1. Coordinate sizes and locations of concrete bases with actual equipment provided.
2. Construct concrete bases [**4 inches**] high unless otherwise indicated on Drawings, and extend base not less than 6 inches in each direction beyond the maximum dimensions of supported equipment unless otherwise indicated on Drawings, or unless required for seismic anchor support.
3. Minimum Compressive Strength: [**3000 psi**] at 28 days.
4. Install dowel rods to connect concrete base to concrete floor. Unless otherwise indicated, install dowel rods on 18-inch centers around the full perimeter of concrete base.
5. For supported equipment, install epoxy-coated anchor bolts that extend through concrete base and anchor into structural concrete substrate.
6. Prior to pouring concrete, place and secure anchorage devices.
   a. Use setting drawings, templates, diagrams, instructions, and directions furnished with items to be embedded.
   b. Cast anchor-bolt insert into bases.
   c. Install anchor bolts to elevations required for proper attachment to supported equipment.

D. Steel Pan Stairs: Provide concrete fill for steel pan stair treads, landings, and associated items.

1. Cast-in inserts and accessories, as shown on Drawings.
2. Screed, tamp, and trowel finish concrete surfaces.

3.10 CONCRETE CURING

A. Protect freshly placed concrete from premature drying and excessive cold or hot temperatures.

1. Comply with ACI 301(ACI 301M) and ACI 306.1 for cold weather protection during curing.
2. Comply with ACI 301 (ACI 301M) and ACI 305.1 (ACI 305.1M) for hot-weather protection during curing.
3. Maintain moisture loss no more than 0.2 lb/sq. ft. x h, calculated in accordance with ACI 305.1, before and during finishing operations.

B. Curing Formed Surfaces: Comply with ACI 308.1 (ACI 308.1) as follows:

1. Cure formed concrete surfaces, including underside of beams, supported slabs, and other similar surfaces.
2. Cure concrete containing color pigments in accordance with color pigment manufacturer's instructions.
3. If forms remain during curing period, moist cure after loosening forms.
4. If removing forms before end of curing period, continue curing for remainder of curing period, as follows:
   a. Continuous Fogging: Maintain standing water on concrete surface until final setting of concrete.
   b. Continuous Sprinkling: Maintain concrete surface continuously wet.
   c. Absorptive Cover: Pre-dampen absorptive material before application; apply additional water to absorptive material to maintain concrete surface continuously wet.
   d. Water-Retention Sheeting Materials: Cover exposed concrete surfaces with sheeting material, taping, or lapping seams.

e. Membrane-Forming Curing Compound: Apply uniformly in continuous operation by power spray or roller in accordance with manufacturer's written instructions.
   1) Recoat areas subject to heavy rainfall within three hours after initial application.
   2) Maintain continuity of coating and repair damage during curing period.

C. Curing Unformed Surfaces: Comply with ACI 308.1 (ACI 308.1M) as follows:

1. Begin curing immediately after finishing concrete.
2. Interior Concrete Floors:
   a. Floors to Receive Floor Coverings Specified in Other Sections: Contractor has option of the following:
      1) Absorptive Cover: As soon as concrete has sufficient set to permit application without marring concrete surface, install prewetted absorptive cover over entire area of floor.
         a) Lap edges and ends of absorptive cover not less than 12 inches.
         b) Maintain absorptive cover water saturated, and in place, for duration of curing period, but not less than seven days.
      2) Moisture-Retaining-Cover Curing: Cover concrete surfaces with moisture-retaining cover for curing concrete, placed in widest practicable width, with sides and ends lapped at least 12 inches, and sealed by waterproof tape or adhesive.
         a) Immediately repair any holes or tears during curing period, using cover material and waterproof tape.
         b) Cure for not less than seven days.
      3) Ponding or Continuous Sprinkling of Water: Maintain concrete surfaces continuously wet for not less than seven days, utilizing one, or a combination of, the following:
         a) Water.
         b) Continuous water-fog spray.
   b. Floors to Receive Penetrating Liquid Floor Treatments: Contractor has option of the following:
      1) Absorptive Cover: As soon as concrete has sufficient set to permit application without marring concrete surface, install prewetted absorptive cover over entire area of floor.
         a) Lap edges and ends of absorptive cover not less than 12 inches.
         b) Maintain absorptive cover water saturated, and in place, for duration of curing period, but not less than seven days.
      2) Moisture-Retaining-Cover Curing: Cover concrete surfaces with moisture-retaining cover for curing concrete, placed in widest practicable width, with sides and ends lapped at least 12 inches, and sealed by waterproof tape or adhesive.
         a) Immediately repair any holes or tears during curing period, using cover material and waterproof tape.
         b) Cure for not less than seven days.
      3) Ponding or Continuous Sprinkling of Water: Maintain concrete surfaces continuously wet for not less than seven days, utilizing one, or a combination of, the following:
         a) Water.
         b) Continuous water-fog spray.
   c. Floors to Receive Polished Finish: Contractor has option of the following:

1) Absorptive Cover: As soon as concrete has sufficient set to permit application without marring concrete surface, install prewetted absorptive cover over entire area of floor.
   a) Lap edges and ends of absorptive cover not less than 12 inches.
   b) Maintain absorptive cover water saturated, and in place, for duration of curing period, but not less than seven days.
2) Ponding or Continuous Sprinkling of Water: Maintain concrete surfaces continuously wet for not less than seven days, utilizing one, or a combination of, the following:
   a) Water.
   b) Continuous water-fog spray.

d. Floors to Receive Chemical Stain:
   1) As soon as concrete has sufficient set to permit application without marring concrete surface, install curing paper over entire area of floor.
   2) Install curing paper square to building lines, without wrinkles, and in a single length without end joints.
   3) Butt sides of curing paper tight; do not overlap sides of curing paper.
   4) Leave curing paper in place for duration of curing period, but not less than 28 days.

e. Floors to Receive Urethane Flooring:
   1) As soon as concrete has sufficient set to permit application without marring concrete surface, install prewetted absorptive cover over entire area of floor.
   2) Rewet absorptive cover, and cover immediately with polyethylene moisture-retaining cover with edges lapped 6 inches and sealed in place.
   3) Secure polyethylene moisture-retaining cover in place to prohibit air from circulating under polyethylene moisture-retaining cover.
   4) Leave absorptive cover and polyethylene moisture-retaining cover in place for duration of curing period, but not less than 28 days.

f. Floors to Receive Curing Compound:
   1) Apply uniformly in continuous operation by power spray or roller in accordance with manufacturer's written instructions.
   2) Recoat areas subjected to heavy rainfall within three hours after initial application.
   3) Maintain continuity of coating, and repair damage during curing period.
   4) Removal: After curing period has elapsed, remove curing compound without damaging concrete surfaces by method recommended by curing compound manufacturer [**unless manufacturer certifies curing compound does not interfere with bonding of floor covering used on Project**].

g. Floors to Receive Curing and Sealing Compound:
   1) Apply uniformly to floors and slabs indicated in a continuous operation by power spray or roller in accordance with manufacturer's written instructions.
   2) Recoat areas subjected to heavy rainfall within three hours after initial application.
   3) Repeat process 24 hours later, and apply a second coat. Maintain continuity of coating, and repair damage during curing period.

3.11 TOLERANCES

A. Conform to ACI 117.

3.12 APPLICATION OF LIQUID FLOOR TREATMENTS

A. Penetrating Liquid Floor Treatment: Prepare, apply, and finish penetrating liquid floor treatment in accordance with manufacturer's written instructions.

1. Remove curing compounds, sealers, oil, dirt, laitance, and other contaminants and complete surface repairs.
2. Do not apply to concrete that is less than [**three**] days' old.
3. Apply liquid until surface is saturated, scrubbing into surface until a gel forms; rewet; and repeat brooming or scrubbing.
4. Rinse with water; remove excess material until surface is dry.
5. Apply a second coat in a similar manner if surface is rough or porous.

B. Sealing Coat: Uniformly apply a continuous sealing coat of curing and sealing compound to hardened concrete by power spray or roller in accordance with manufacturer's written instructions.

3.13 JOINT FILLING

A. Prepare, clean, and install joint filler in accordance with manufacturer's written instructions.

1. Defer joint filling until concrete has aged at least one month.
2. Do not fill joints until construction traffic has permanently ceased.

B. Remove dirt, debris, saw cuttings, curing compounds, and sealers from joints; leave contact faces of joints clean and dry.

C. Install semirigid joint filler full depth in saw-cut joints and at least 2 inches (50 mm) deep in formed joints.

D. Overfill joint, and trim joint filler flush with top of joint after hardening.

3.14 CONCRETE SURFACE REPAIRS

A. Defective Concrete:

1. Repair and patch defective areas when approved by Architect.
2. Remove and replace concrete that cannot be repaired and patched to Architect's approval.

B. Patching Mortar: Mix dry-pack patching mortar, consisting of 1 part portland cement to 2-1/2 parts fine aggregate passing a No. 16 (1.18-mm) sieve, using only enough water for handling and placing.

C. Repairing Formed Surfaces: Surface defects include color and texture irregularities, cracks, spalls, air bubbles, honeycombs, rock pockets, fins and other projections on the surface, and stains and other discolorations that cannot be removed by cleaning.

1. Immediately after form removal, cut out honeycombs, rock pockets, and voids more than 1/2 inch (13 mm) in any dimension to solid concrete.
   a. Limit cut depth to 3/4 inch (19 mm).

b. Make edges of cuts perpendicular to concrete surface.
c. Clean, dampen with water, and brush-coat holes and voids with bonding agent.
d. Fill and compact with patching mortar before bonding agent has dried.
e. Fill form-tie voids with patching mortar or cone plugs secured in place with bonding agent.

2. Repair defects on surfaces exposed to view by blending white portland cement and standard portland cement, so that, when dry, patching mortar matches surrounding color.
   a. Patch a test area at inconspicuous locations to verify mixture and color match before proceeding with patching.
   b. Compact mortar in place and strike off slightly higher than surrounding surface.
3. Repair defects on concealed formed surfaces that will affect concrete's durability and structural performance as determined by Architect.

D. Repairing Unformed Surfaces:

1. Test unformed surfaces, such as floors and slabs, for finish, and verify surface tolerances specified for each surface.
   a. Correct low and high areas.
   b. Test surfaces sloped to drain for trueness of slope and smoothness; use a sloped template.
2. Repair finished surfaces containing surface defects, including spalls, popouts, honeycombs, rock pockets, crazing, and cracks in excess of 0.01 inch (0.25 mm) wide or that penetrate to reinforcement or completely through unreinforced sections regardless of width, and other objectionable conditions.
3. After concrete has cured at least 14 days, correct high areas by grinding.
4. Correct localized low areas during, or immediately after, completing surface-finishing operations by cutting out low areas and replacing with patching mortar.
   a. Finish repaired areas to blend into adjacent concrete.
5. Correct other low areas scheduled to receive floor coverings with a repair underlayment.
   a. Prepare, mix, and apply repair underlayment and primer in accordance with manufacturer's written instructions to produce a smooth, uniform, plane, and level surface.
   b. Feather edges to match adjacent floor elevations.
6. Correct other low areas scheduled to remain exposed with repair topping.
   a. Cut out low areas to ensure a minimum repair topping depth of 1/4 inch (6 mm) to match adjacent floor elevations.
   b. Prepare, mix, and apply repair topping and primer in accordance with manufacturer's written instructions to produce a smooth, uniform, plane, and level surface.
7. Repair defective areas, except random cracks and single holes 1 inch (25 mm) or less in diameter, by cutting out and replacing with fresh concrete.
   a. Remove defective areas with clean, square cuts, and expose steel reinforcement with at least a 3/4-inch (19-mm) clearance all around.
   b. Dampen concrete surfaces in contact with patching concrete and apply bonding agent.
   c. Mix patching concrete of same materials and mixture as original concrete, except without coarse aggregate.
   d. Place, compact, and finish to blend with adjacent finished concrete.
   e. Cure in same manner as adjacent concrete.
8. Repair random cracks and single holes 1 inch (25 mm) or less in diameter with patching mortar.

a. Groove top of cracks and cut out holes to sound concrete, and clean off dust, dirt, and loose particles.
b. Dampen cleaned concrete surfaces and apply bonding agent.
c. Place patching mortar before bonding agent has dried.
d. Compact patching mortar and finish to match adjacent concrete.
e. Keep patched area continuously moist for at least 72 hours.

E. Perform structural repairs of concrete, subject to Architect's approval, using epoxy adhesive and patching mortar.

F. Repair materials and installation not specified above may be used, subject to Architect's approval.

3.15 FIELD QUALITY CONTROL

A. Special Inspections: Owner will engage a special inspector to perform field tests and inspections and prepare testing and inspection reports.

B. Testing Agency: [**Owner will engage**] a qualified testing and inspecting agency to perform tests and inspections and to submit reports.

1. Testing agency to be responsible for providing curing container for composite samples on Site and verifying that field-cured composite samples are cured in accordance with ASTM C31/C31M.
2. Testing agency to immediately report to Architect, Contractor, and concrete manufacturer any failure of Work to comply with Contract Documents.
3. Testing agency shall report results of tests and inspections, in writing, to Owner, Architect, Contractor, and concrete manufacturer within 48 hours of inspections and tests.
   a. Test reports to include reporting requirements of ASTM C31/C31M, ASTM C39/C39M, and ACI 301, including the following as applicable to each test and inspection:
      1) Project name.
      2) Name of testing agency.
      3) Names and certification numbers of field and laboratory technicians performing inspections and testing.
      4) Name of concrete manufacturer.
      5) Date and time of inspection, sampling, and field testing.
      6) Date and time of concrete placement.
      7) Location in Work of concrete represented by samples.
      8) Date and time sample was obtained.
      9) Truck and batch ticket numbers.
      10) Design compressive strength at 28 days.
      11) Concrete mixture designation, proportions, and materials.
      12) Field test results.
      13) Information on storage and curing of samples before testing, including curing method and maximum and minimum temperatures during initial curing period.
      14) Type of fracture and compressive break strengths at seven days and 28 days.

C. Batch Tickets: For each load delivered, submit three copies of batch delivery ticket to testing agency, indicating quantity, mix identification, admixtures, design strength, aggregate size,

design air content, design slump at time of batching, and amount of water that can be added at Project site.

D. Inspections:

1. Headed bolts and studs.
2. Verification of use of required design mixture.
3. Concrete placement, including conveying and depositing.
4. Curing procedures and maintenance of curing temperature.
5. Verification of concrete strength before removal of shores and forms from beams and slabs.
6. Batch Plant Inspections: On a random basis, as determined by Architect.

E. Concrete Tests: Testing of composite samples of fresh concrete obtained in accordance with ASTM C 172/C 172M shall be performed in accordance with the following requirements:

1. Testing Frequency: Obtain one composite sample for each 150 cu. yd. (76 cu. m.) or fraction thereof of each concrete mixture placed each day.
   a. When frequency of testing provides fewer than five compressive-strength tests for each concrete mixture, testing shall be conducted from at least five randomly selected batches or from each batch if fewer than five are used.
2. Slump: ASTM C143/C143M:
   a. One test at point of placement for each composite sample, but not less than one test for each day's pour of each concrete mixture.
   b. Perform additional tests when concrete consistency appears to change.
3. Slump Flow: ASTM C1611/C1611M:
   a. One test at point of placement for each composite sample, but not less than one test for each day's pour of each concrete mixture.
   b. Perform additional tests when concrete consistency appears to change.
4. Air Content: ASTM C231/C231M pressure method, for normal-weight concrete; .
   a. One test for each composite sample, but not less than one test for each day's pour of each concrete mixture.
5. Concrete Temperature: ASTM C1064/C1064M:
   a. One test hourly when air temperature is 40 deg F and below or 80 deg F and above, and one test for each composite sample.
6. Unit Weight: ASTM C567/C567M fresh unit weight of structural lightweight concrete.
   a. One test for each composite sample, but not less than one test for each day's pour of each concrete mixture.
7. Compression Test Specimens: ASTM C31/C31M:
   a. Cast and laboratory cure two sets of [**two**] 6-inch by 12-inch or 4-inch by 8-inch cylinder specimens for each composite sample.
   b. Cast, initial cure, and field cure [**two**] sets of [**two**] standard cylinder specimens for each composite sample.
8. Compressive-Strength Tests: ASTM C39/C39M.
   a. Test one set of [**two**] laboratory-cured specimens at seven days and one set of two specimens at 28 days.
   b. Test one set of [**two**] field-cured specimens at seven days and one set of two specimens at 28 days.
   c. A compressive-strength test to be the average compressive strength from a set of two specimens obtained from same composite sample and tested at age indicated.

9. When strength of field-cured cylinders is less than 85 percent of companion laboratory-cured cylinders, Contractor to evaluate operations and provide corrective procedures for protecting and curing in-place concrete.
10. Strength of each concrete mixture will be satisfactory if every average of any three consecutive compressive-strength tests equals or exceeds specified compressive strength, and no compressive-strength test value falls below specified compressive strength by more than 500 psi if specified compressive strength is 5000 psi, or no compressive strength test value is less than 10 percent of specified compressive strength if specified compressive strength is greater than 5000 psi.
11. Nondestructive Testing: Impact hammer, sonoscope, or other nondestructive device may be permitted by Architect but will not be used as sole basis for approval or rejection of concrete.
12. Additional Tests:
    a. Testing and inspecting agency to make additional tests of concrete when test results indicate that slump, air entrainment, compressive strengths, or other requirements have not been met, as directed by Architect.
    b. Testing and inspecting agency may conduct tests to determine adequacy of concrete by cored cylinders complying with ASTM C42/C42M or by other methods as directed by Architect.
        1) Acceptance criteria for concrete strength to be in accordance with ACI 301, Section 1.6.6.3.
13. Additional testing and inspecting, at Contractor's expense, will be performed to determine compliance of replaced or additional work with specified requirements.
14. Correct deficiencies in the Work that test reports and inspections indicate do not comply with the Contract Documents.

F. Measure floor and slab flatness and levelness in accordance with ASTM E1155 within [**24**] hours of completion of floor finishing and promptly report test results to Architect.

3.16 PROTECTION

A. Protect concrete surfaces as follows:

1. Protect from petroleum stains.
2. Diaper hydraulic equipment used over concrete surfaces.
3. Prohibit vehicles from interior concrete slabs.
4. Prohibit use of pipe-cutting machinery over concrete surfaces.
5. Prohibit placement of steel items on concrete surfaces.
6. Prohibit use of acids or acidic detergents over concrete surfaces.
7. Protect liquid floor treatment from damage and wear during the remainder of construction period. Use protective methods and materials, including temporary covering, recommended in writing by liquid floor treatments installer.
8. Protect concrete surfaces scheduled to receive surface hardener or polished concrete finish using Floor Slab Protective Covering.

END OF SECTION 03 3000

SECTION 03 5413 - GYPSUM CEMENT UNDERLAYMENT

PART 1 - GENERAL

1.1 RELATED DOCUMENTS

A. Drawings and general provisions of Contract, including General and Supplementary Conditions and Division 1 Specification Sections, apply to this Section.

1.2 SECTION INCLUDES

A. Liquid applied, gypsum based self-leveling floor underlayment system.

1.3 RELATED WORK

A. Division 6 - Rough Carpentry.

1.4 SUBMITTALS

A. Product Data: Provide physical characteristics, product limitations and installation instructions.

B. Manufacturer's Certificate: Certify that products meet or exceed specified requirements and materials were installed in accordance with manufacturer's requirements.

C. Third-Party Test data provide IBC Code minimum 50 STC/IIC ratings.

1.5 QUALIFICATIONS

A. Applicator: Company specializing in performing the work of this Section with minimum 3 years documented experience approved by manufacturer.

1.6 QUALITY ASSURANCE

A. Fire Test Response Characteristics: Where assemblies are indicated, provide materials and construction identical to those of assemblies tested for fire resistance per ASTM E 119 by an independent testing and inspecting agency acceptable to authorities having jurisdiction.

B. Fire Resistance Ratings: As indicated by reference to design designations in UL "Fire Resistance Directory". Per plans L521 with 3/4” floor topping mixture.

C. Sound Transmission Characteristics: For assemblies indicated to have STC ratings, provide materials and construction identical to those of assemblies whose STC ratings were determined per ASTM E 90 and classified per ASTM E 413 by a qualified independent testing agency.

1.7 ENVIRONMENTAL REQUIREMENTS

A. Do not install underlayment until floor penetrations and peripheral work is complete.

B. Maintain minimum ambient temperatures above freezing before, during and 72 hours after installation of underlayment. Protect surfaces by being placed after roof sheathing has been installed.

C. During the curing process, ventilate spaces to remove excess moisture.

PART 2 - PRODUCTS

2.1 MANUFACTURER'S UNDERLAYMENT

A. "Gyp-Crete 2000" - Maxxon Corporation.

B. Elastizell

C. USG Level-Rock 2500

2.2 MATERIALS

A. Underlayment: Cementitous based mix.

B. Water: Potable and not detrimental to underlayment mix materials. Primer: Manufacturers recommended type.

C. Joint and Crack Filler: Latex based.

D. Sealer: Manufacturer's recommended product.

2.3 MIXING

A. Site mix materials in accordance with manufacturer's instructions.

B. Mix to achieve following characteristics:

1. Density: 115 Ib./cu. ft. minimum dry density
2. Compressive Strength: 2,000 psi minimum in accordance with ASTM C472 or as required to meet U.L. and sound ratings.

PART 3 - EXECUTION

3.1 EXAMINATION

A. Verify that substrate surfaces are clean, dry, structurally sound, unfrozen, do not contain petroleum By products, or other compounds detrimental to underlayment material bond to substrate.

3.2 PREPARATION

A. Remove substrate surface irregularities. Fill voids and deck joints with filler. Finish smooth.

B. Broom clean surfaces.

C. Prime substrate in accordance with manufacturer's instructions. Allow to dry.

3.3 INSTALLATION

A. Install underlayment in accordance with manufacturers instructions.

B. Place to minimum thicknesses noted per plans.

C. Install after partition and drywall installation.

D. Pre pour under tubs / showers and in party wall space.

E. Ensure that underlayment surfaces in areas scheduled to receive resilient flooring do not contain imperfections that would telegraph through installed finishes. Seal all areas that receive glue down flooring.

3.4 CURING

A. Air cure in accordance with manufacturer's instructions. Perform test to confirm adequate drying before floor finish installation, as recommended by the manufacturer.

3.5 APPLICATION TOLERANCE

A. Maintain top surface level to 1/8 inch in 10 ft.

END OF SECTION 03 5413

SECTION 04 2000 - UNIT MASONRY

PART 1 - GENERAL

1.1 RELATED DOCUMENTS

A. Drawings and general provisions of the Contract, including General and Supplementary Conditions and Division 01 Specification Sections, apply to this Section.

1.2 SUMMARY

A. Section Includes:

1. Concrete units.
2. Face brick.
3. Mortar and grout materials.
4. Ties and anchors.
5. Embedded flashing.
6. Miscellaneous masonry accessories.

1.3 SUBMITTALS

A. Product Data: For each type of product.

B. Samples: For each type and color of the following:

1. Face brick.
2. Special brick shapes.
3. Pigmented mortar. Make Samples using same sand and mortar ingredients to be used on Project.

C. Qualification Data: For testing agency.

D. Material Certificates: For each type and size of the following:

1. Masonry units:
   a. Include data on material properties.
   b. For brick, include size-variation data verifying that actual range of sizes falls within specified tolerances.
   c. For exposed brick, include test report for efflorescence according to ASTM C 67.
2. Cementitious materials. Include brand, type, and name of manufacturer.
3. Pre-blended, dry mortar mixes. Include description of type and proportions of ingredients.
4. Grout mixes. Include description of type and proportions of ingredients.

1.4 QUALITY ASSURANCE

A. Source Limitations for Masonry Units: Obtain exposed masonry units of a uniform texture and color, or a uniform blend within the ranges accepted for these characteristics, from single source from single manufacturer for each product required.

B. Source Limitations for Mortar Materials: Obtain mortar ingredients of a uniform quality, including color for exposed masonry, from single manufacturer for each cementitious component and from single source or producer for each aggregate.

C. Masonry Standard: Comply with ACI 530.1/ASCE 6/TMS 602 unless modified by requirements in the Contract Documents.

D. Mockups: Build mockups to verify selections made under sample submittals and to demonstrate aesthetic effects and set quality standards for materials and execution.

1. Build mockup of typical wall area as shown on Drawings.
    a. Include a sealant-filled joint at least 16 inches long in exterior wall mockup for each color of sealant.
    b. Include through-wall flashing installed for a 24-inch length in corner of exterior wall mockup approximately 16 inches down from top of mockup, with a 12-inch length of flashing left exposed to view (omit masonry above half of flashing).
    c. Include cold formed metal framing as indicated, sheathing, sheathing joint-and-penetration treatment, moisture barrier, veneer anchors, flashing, cavity drainage material, and weep holes in exterior masonry-veneer wall mockup.
2. Clean one-half of exposed faces of mockups with masonry cleaner as indicated.
3. Protect accepted mockups from the elements with weather-resistant membrane.
4. Approval of mockups is for color, texture, and blending of masonry units; relationship of mortar and sealant colors to masonry unit colors; tooling of joints; and aesthetic qualities of workmanship.
    a. Approval of mockups does not constitute approval of deviations from the Contract Documents contained in mockups unless such deviations are specifically approved by Architect in writing.

E. Pre-installation Conference: Conduct conference at Project site to comply with requirements in Division 01 Section "Project Management and Coordination."

1.5 DELIVERY, STORAGE, AND HANDLING

A. Store masonry units on elevated platforms in a dry location. If units are not stored in an enclosed location, cover tops and sides of stacks with waterproof sheeting, securely tied. If units become wet, do not install until they are dry.

B. Store cementitious materials on elevated platforms, under cover, and in a dry location. Do not use cementitious materials that have become damp.

C. Store aggregates where grading and other required characteristics can be maintained and contamination avoided.

D. Deliver preblended, dry mortar mix in moisture-resistant containers designed for use with dispensing silos. Store preblended, dry mortar mix in delivery containers on elevated platforms, under cover, and in a dry location or in covered weatherproof dispensing silos.

E. Store masonry accessories, including metal items, to prevent corrosion and accumulation of dirt and oil.

1.6 PROJECT CONDITIONS

A. Protection of Masonry: During construction, cover tops of walls, projections, and sills with waterproof sheeting at end of each day's work. Cover partially completed masonry when construction is not in progress.

1. Extend cover a minimum of 24 inches 600 mm down both sides of walls and hold cover securely in place.
2. Where one wythe of multiwythe masonry walls is completed in advance of other wythes, secure cover a minimum of 24 inches down face next to unconstructed wythe and hold cover in place.

B. Stain Prevention: Prevent grout, mortar, and soil from staining the face of masonry to be left exposed or painted. Immediately remove grout, mortar, and soil that come in contact with such masonry.

1. Protect base of walls from rain-splashed mud and from mortar splatter by spreading coverings on ground and over wall surface.
2. Protect sills, ledges, and projections from mortar droppings.
3. Protect surfaces of window and door frames, as well as similar products with painted and integral finishes, from mortar droppings.
4. Turn scaffold boards near the wall on edge at the end of each day to prevent rain from splashing mortar and dirt onto completed masonry.

C. Cold-Weather Requirements: Do not use frozen materials or materials mixed or coated with ice or frost. Do not build on frozen substrates. Remove and replace unit masonry damaged by frost or by freezing conditions. Comply with cold-weather construction requirements contained in ACI 530.1/ASCE 6/TMS 602.

1. Cold-Weather Cleaning: Use liquid cleaning methods only when air temperature is 40 deg F and higher and will remain so until masonry has dried, but not less than seven days after completing cleaning.

D. Hot-Weather Requirements: Comply with hot-weather construction requirements contained in ACI 530.1/ASCE 6/TMS 602.

PART 2 - PRODUCTS

2.1 UNIT MASONRY, GENERAL

A. Defective Units: Referenced masonry unit standards may allow a certain percentage of units to contain chips, cracks, or other defects exceeding limits stated. Do not use units where such defects are exposed in the completed Work.

2.2 CONCRETE MASONRY UNITS

A. Concrete Block: Comply with referenced standards and as follows:

1. Size: Standard units with nominal face dimensions of 16 x 8 inches and nominal depth of 8 inches.
2. Special Shapes: Provide non-standard blocks configured for corners.
3. Non-Loadbearing Units: ASTM C 129.
   a. Hollow block, as indicated.
   b. Lightweight.

2.3 BRICK

A. General: Provide shapes indicated and as follows, with exposed surfaces matching finish and color of exposed faces of adjacent units:

1. For ends of sills and caps and for similar applications that would otherwise expose unfinished brick surfaces, provide units without cores or frogs and with exposed surfaces finished.
2. Provide special shapes for applications where stretcher units cannot accommodate special conditions, including those at corners, movement joints, bond beams, sashes, and lintels.
3. Provide special shapes for applications requiring brick of size, form, color, and texture on exposed surfaces that cannot be produced by sawing.
4. Provide special shapes for applications where shapes produced by sawing would result in sawed surfaces being exposed to view.

B. Face Brick: Facing brick complying with ASTM C 216.

1. Grade: SW.
2. Type: FBX.
3. Unit Compressive Strength: Provide units with minimum average net-area compressive strength of 3350 psi.
4. Initial Rate of Absorption: Less than 30 g/30 sq. in. per minute when tested per ASTM C 67.
5. Efflorescence: Provide brick that has been tested according to ASTM C 67 and is rated "not effloresced."

C. Basis of Design:

1. Per Building Elevations; Contact James Tavenner ; Shade and Wise; jtavenner@shadeandwise.com.
2. Substitutions: Submit in accordance with Division 1 section “Substitution Procedures.”

2.4 MORTAR AND GROUT MATERIALS

A. Portland Cement: ASTM C 150, Type I or II, except Type III may be used for cold-weather construction. Provide natural color or white cement as required to produce mortar color indicated.

B. Hydrated Lime: ASTM C 207, Type S.

C. Mortar Pigments: Natural and synthetic iron oxides and chromium oxides, compounded for use in mortar mixes and complying with ASTM C 979. Use only pigments with a record of satisfactory performance in masonry mortar.

1. Products: Subject to compliance with requirements, provide one of the following:
   a. Davis Colors; True Tone Mortar Colors.
   b. Lanxess Corporation; Bayferrox Iron Oxide Pigments.
   c. Solomon Colors, Inc.; SGS Mortar Colors.

D. Aggregate for Mortar: ASTM C 144.

1. For mortar that is exposed to view, use washed aggregate consisting of natural sand or crushed stone.
2. For joints less than 1/4 inch 6 mm thick, use aggregate graded with 100 percent passing the No. 16 1.18- sieve.

E. Grout Aggregate: ASTM C 404.

F. Water: Potable.

2.5 TIES AND ANCHORS

A. Manufacturers of Joint Reinforcement and Anchors:

1. Dur-O-Wal: www.dur-o-wal.com.
2. Hohmann & Barnard, Inc: www.h-b.com.
3. Masonry Reinforcing Corporation of America: www.wirebond.com.
4. Substitutions: See Section 01 6000 - Product Requirements.

B. Materials: Provide ties and anchors specified in this article that are made from materials that comply with the following unless otherwise indicated:

1. Steel Sheet, Galvanized after Fabrication: ASTM A1008/A1008M, Commercial Steel, with ASTM A153/A153M, Class B coating.
2. Steel Plates, Shapes, and Bars: ASTM A36/A36M.

C. Reinforcing Steel: ASTM A 615/A 615M Grade 40 (280) deformed billet bars; galvanized.

D. Joint Reinforcement: Use ladder type joint reinforcement where vertical reinforcement is involved and truss type elsewhere, unless otherwise indicated.

E. Single Wythe Joint Reinforcement: Truss type; ASTM A 82/A 82M steel wire, mill galvanized to ASTM A 641/A 641M, Class 3; 0.1483 inch side rods with 0.1483 inch cross rods; width as required to provide not more than 1 inch and not less than 1/2 inch of mortar coverage on each exposure.

F. Multiple Wythe Joint Reinforcement: Truss type; fabricated with moisture drip; ASTM A 82/A 82M steel wire, hot dip galvanized after fabrication to ASTM A 153/153M, Class B; 0.1483 inch side rods with 0.1483 inch cross rods; width as required to provide not more than 1 inch and not less than 1/2 inch of mortar coverage on each exposure.

G. Wire Ties, General: Unless otherwise indicated, size wire ties to extend at least halfway through veneer but with at least 5/8-inch cover on outside face. Outer ends of wires are bent 90 degrees and extend 2 inches parallel to face of veneer.

H. Individual Wire Ties: Rectangular units with closed ends and not less than 4 inches wide.

1. Wire: Fabricate from 3/16-inch diameter, steel wire, galvanized after fabrication.

I. Adjustable Masonry-Veneer Anchors:

1. General: Provide anchors that allow vertical adjustment but resist tension and compression forces perpendicular to plane of wall, for attachment over sheathing to wood or metal studs, and as follows:
   a. Structural Performance Characteristics: Capable of withstanding a 100-lbf load in both tension and compression without deforming or developing play in excess of 0.5 inch.
2. Screw-Attached, Masonry-Veneer Anchors: Units consisting of a wire tie and a metal anchor section.
   a. Products: Subject to compliance with requirements, provide one of the following:
      1) Dayton Superior Corporation, Dur-O-Wal Division; D/A 213.
      2) Heckmann Building Products Inc.; 315-D with 316.
      3) Hohmann & Barnard, Inc.; DW-10.
      4) Wire-Bond; 1004, Type III.
   b. Anchor Section: Rib-stiffened, sheet metal plate with screw holes top and bottom, 2-3/4 inches wide by 3 inches high; with projecting tabs having slotted holes for inserting vertical legs of wire tie specially formed to fit anchor section.
   c. Fabricate sheet metal anchor sections and other sheet metal parts from [0.075- inch-thick, steel sheet, galvanized after fabrication].
   d. Wire Ties: Triangular-, rectangular-, or T-shaped wire ties fabricated from 0.187-inch- diameter, hot-dip galvanized steel wire.
3. Polymer-Coated, Steel Drill Screws for Steel Studs: ASTM C 954 except manufactured with hex washer head and neoprene or EPDM washer, No. 10 diameter by length required to penetrate steel stud flange with not less than three exposed threads, and with organic polymer coating with salt-spray resistance to red rust of more than 800 hours per ASTM B 117.
   a. Products: Subject to compliance with requirements, provide one of the following:
      1) ITW Buildex; Teks Maxiseal with Climaseal finish.
      2) Textron Inc., Textron Fastening Systems; Elco Dril-Flex with Stalgard finish.

2.6 EMBEDDED FLASHING

A. Metal Flashing: Provide metal flashing complying with SMACNA's "Architectural Sheet Metal Manual" and as follows:

1. Stainless Steel: ASTM A240/A240M or ASTM A666, [**Type 304**] [**Type 316**], 0.016 inch thick.
2. Fabricate continuous flashings in sections 96 inches long minimum, but not exceeding 12 ft.. Provide splice plates at joints of formed, smooth metal flashing.
3. Fabricate metal drip edges from stainless steel. Extend at least 3 inches into wall and 1/2 inch out from wall, with outer edge bent down 30 degrees [**and hemmed**].

2.7 MISCELLANEOUS MASONRY ACCESSORIES

A. Compressible Filler: Premolded filler strips complying with ASTM D1056, Grade 2A1; compressible up to 35 percent; of width and thickness indicated; formulated from neoprene urethane or PVC.

B. Bond-Breaker Strips: Asphalt-saturated, organic roofing felt complying with ASTM D 226, Type I (No. 15 asphalt felt).

C. Weep/Vent Products:

1. Cellular Plastic Weep/Vent: One-piece, flexible extrusion made from UV-resistant polypropylene copolymer, full height and width of head joint and depth 1/8 inch less than depth of outer wythe, in color selected from manufacturer's standard.
   a. Products: Subject to compliance with requirements, provide one of the following:
      1) Advanced Building Products Inc.; Mortar Maze weep vent.
      2) Blok-Lok Limited; Cell-Vent.
      3) Dayton Superior Corporation, Dur-O-Wal Division; Cell Vents.
      4) Heckmann Building Products Inc.; No. 85 Cell Vent.
      5) Hohmann & Barnard, Inc.; Quadro-Vent.
      6) Wire-Bond; Cell Vent.

D. Cavity Drainage Material: Free-draining mesh, made from polymer strands that will not degrade within the wall cavity.

1. Products: Subject to compliance with requirements, provide one of the following:
   a. Advanced Building Products Inc.; Mortar Break.
   b. Archovations, Inc.; CavClear Masonry Mat.
   c. Dayton Superior Corporation, Dur-O-Wal Division; Polytite MortarStop.
   d. Mortar Net USA, Ltd.; Mortar Net.
2. Provide one of the following configurations:
   a. Strips, full-depth of cavity and 10 inches 250 mm high, with dovetail shaped notches 7 inches 175 mm deep that prevent clogging with mortar droppings.

2.8 MORTAR AND GROUT MIXES

A. General: Do not use admixtures, including pigments, air-entraining agents, accelerators, retarders, water-repellent agents, antifreeze compounds, or other admixtures unless otherwise indicated.

1. Do not use calcium chloride in mortar or grout.
2. Use portland cement-lime masonry cement mortar unless otherwise indicated.

B. Preblended, Dry Mortar Mix: Furnish dry mortar ingredients in form of a preblended mix. Measure quantities by weight to ensure accurate proportions, and thoroughly blend ingredients before delivering to Project site.

C. Mortar for Unit Masonry: Comply with ASTM C270, Property Specification. Provide the following types of mortar for applications stated unless another type is indicated [**or needed to provide required compressive strength of masonry**].

1. For masonry below grade or in contact with earth, use Type M.
2. For exterior, above-grade, load-bearing, nonload-bearing walls, and parapet walls; for interior load-bearing walls; for interior nonload-bearing partitions; and for other applications where another type is not indicated, use Type N.

D. Pigmented Mortar: Use colored cement product [**or select and proportion pigments with other ingredients to produce color required. Do not add pigments to colored cement products**].

1. Pigments do not exceed 10 percent of portland cement by weight.
2. Mix to match approved sample.
3. Application: Use pigmented mortar for exposed mortar joints at locations indicated.

PART 3 - EXECUTION

3.1 EXAMINATION

A. Examine conditions, with Installer present, for compliance with requirements for installation tolerances and other conditions affecting performance of the Work.

1. For the record, prepare written report, endorsed by Installer, listing conditions detrimental to performance of work.
2. Verify that foundations are within tolerances specified.

B. Before installation, examine rough-in and built-in construction for piping systems to verify actual locations of piping connections.

C. Proceed with installation only after unsatisfactory conditions have been corrected.

3.2 INSTALLATION, GENERAL

A. Thickness: Build cavity walls and other masonry construction to full thickness shown.

B. Leave openings for equipment to be installed before completing masonry. After installing equipment, complete masonry to match the construction immediately adjacent to opening.

C. Use full-size units without cutting if possible. If cutting is required to provide a continuous pattern or to fit adjoining construction, cut units with motor-driven saws; provide clean, sharp, unchipped edges. Allow units to dry before laying unless wetting of units is specified. Install cut units with cut surfaces and, where possible, cut edges concealed.

D. Select and arrange units for exposed unit masonry to produce a uniform blend of colors and textures.

E. Mix units from several pallets or cubes as they are placed.

F. Wetting of Brick: Wet brick before laying if initial rate of absorption exceeds 30 g/30 sq. in. per minute when tested per ASTM C 67. Allow units to absorb water so they are damp but not wet at time of laying.

3.3 TOLERANCES

A. Dimensions and Locations of Elements:

1. For dimensions in cross section or elevation, do not vary by more than plus 1/2 inch or minus 1/4 inch.
2. For location of elements in plan, do not vary from that indicated by more than plus or minus 1/2 inch.
3. For location of elements in elevation, do not vary from that indicated by more than plus or minus 1/4 inch in a story height or 1/2 inch total.

B. Lines and Levels:

1. For bed joints and top surfaces of bearing walls, do not vary from level by more than 1/4 inch in 10 ft., or 1/2-inch maximum.
2. For conspicuous horizontal lines, such as lintels, sills, parapets, and reveals, do not vary from level by more than 1/8 inch in 10 feet3 mm in 3 m, 1/4 inch in 20 feet6 mm in 6 m, or 1/2 inch 12 mm maximum.
3. For vertical lines and surfaces do not vary from plumb by more than 1/4 inch in 10 feet6 mm in 3 m, 3/8 inch in 20 feet9 mm in 6 m, or 1/2 inch 12 mm maximum.

C. Joints:

1. For bed joints, do not vary from thickness indicated by more than plus or minus 1/8 inch3 mm, with a maximum thickness limited to 1/2 inch12 mm.
2. For head and collar joints, do not vary from thickness indicated by more than plus 3/8 inch 9 mm or minus 1/4 inch6 mm.

3.4 LAYING MASONRY WALLS

A. Lay out walls in advance for accurate spacing of surface bond patterns with uniform joint thicknesses and for accurate location of openings, movement-type joints, returns, and offsets.

Avoid using less-than-half-size units, particularly at corners, jambs, and, where possible, at other locations.

B. Bond Pattern for Exposed Masonry: Running bond unless indicated otherwise; do not use units with less than nominal 4-inch horizontal face dimensions at corners or jambs.

C. Lay concealed masonry with all units in a wythe in running bond or bonded by lapping not less than 4-inches. Bond and interlock each course of each wythe at corners. Do not use units with less than nominal 4-inch 100-mm horizontal face dimensions at corners or jambs.

D. Stopping and Resuming Work: Stop work by racking back units in each course from those in course below; do not tooth. When resuming work, clean masonry surfaces that are to receive mortar, remove loose masonry units and mortar, and wet brick if required before laying fresh masonry.

E. Built-in Work: As construction progresses, build in items specified in this and other Sections. Fill in solidly with masonry around built-in items.

F. Fill space between steel frames and masonry solidly with mortar unless otherwise indicated.

3.5 MORTAR BEDDING AND JOINTING

A. Lay solid masonry units with completely filled bed and head joints; butter ends with sufficient mortar to fill head joints and shove into place. Do not deeply furrow bed joints or slush head joints.

B. Set cast-stone trim units in full bed of mortar with full vertical joints. Fill dowel, anchor, and similar holes.

1. Clean soiled surfaces with fiber brush and soap powder and rinse thoroughly with clear water.
2. Allow cleaned surfaces to dry before setting.
3. Wet joint surfaces thoroughly before applying mortar.

C. Tool exposed joints slightly concave when thumbprint hard, using a jointer larger than joint thickness unless otherwise indicated.

1. For glazed masonry units, use a nonmetallic jointer 3/4 inch or more in width.

D. Cut joints flush for masonry walls to receive plaster or other direct-applied finishes (other than paint) unless otherwise indicated.

3.6 CAVITY WALLS

A. Bond wythes of cavity walls together [**using one of the following methods**] :

1. Individual Metal Ties: Provide ties as indicated installed in horizontal joints, but not less than one metal tie for [**2.67 sq. ft.**] of wall area spaced not to exceed [**24 inches**] o.c. horizontally and 16 inches o.c. vertically. Stagger ties in alternate courses. Provide additional ties within 12 inches of openings and space not more than 36 inches apart around

perimeter of openings. At intersecting and abutting walls, provide ties at no more than 24 inches o.c. vertically.

a. Where bed joints of wythes do not align, use adjustable (two-piece) type ties.

2. Masonry Veneer Anchors: Comply with requirements for anchoring masonry veneers.

B. Keep cavities clean of mortar droppings and other materials during construction. Bevel beds away from cavity, to minimize mortar protrusions into cavity. Do not attempt to trowel or remove mortar fins protruding into cavity.

3.7 ANCHORED MASONRY VENEERS

A. Anchor masonry veneers to [**wall framing**] [**and**] [**concrete and masonry backup**] with masonry-veneer anchors to comply with the following requirements:

1. Fasten [**screw-attached**] anchors [**through sheathing to wall framing**] [**and**] [**to concrete and masonry backup**] with metal fasteners of type indicated. Use two fasteners unless anchor design only uses one fastener.
2. Embed [**tie sections**] in masonry joints. Provide not less than 2 inches 50mm of air space between back of masonry veneer and face of sheathing.
3. Locate anchor sections to allow maximum vertical differential movement of ties up and down.
4. Space anchors as indicated, but not more than 16 inches o.c. vertically and 24 inches o.c. horizontally, with not less than one anchor for each 2.67 sq. ft. of wall area. Install additional anchors within 12 inches of openings and at intervals, not exceeding 36 inches, around perimeter.

3.8 CONTROL AND EXPANSION JOINTS

A. General: Install control and expansion joint materials in unit masonry as masonry progresses. Do not allow materials to span control and expansion joints without provision to allow for in- plane wall or partition movement.

B. Form control joints in concrete masonry using one of the following methods:

1. Fit bond-breaker strips into hollow contour in ends of CMUs on one side of control joint. Fill resultant core with grout and rake out joints in exposed faces for application of sealant.
2. Install preformed control-joint gaskets designed to fit standard sash block.
3. Install interlocking units designed for control joints. Install bond-breaker strips at joint. Keep head joints free and clear of mortar or rake out joint for application of sealant.
4. Install temporary foam-plastic filler in head joints and remove filler when unit masonry is complete for application of sealant.

C. Form expansion joints in brick as follows:

1. Build flanges of metal expansion strips into masonry. Lap each joint 4 inches in direction of water flow. Seal joints below grade and at junctures with horizontal expansion joints if any.
2. Build in compressible joint fillers where indicated.

3. Form open joint full depth of brick wythe and of width indicated, but not less than 3/8 inch10 mm for installation of sealant and backer rod specified in Division 07 Section "Joint Sealants."

D. Provide horizontal, pressure-relieving joints by either leaving an air space or inserting a compressible filler of width required for installing sealant and backer rod specified in Division 07 Section "Joint Sealants," but not less than 3/8 inch

1. Locate horizontal, pressure-relieving joints beneath shelf angles supporting masonry.

3.9 LINTELS

A. Install steel lintels where indicated. To be painted galvanized.

B. Provide minimum bearing of 8 inches at each jamb unless otherwise indicated.

3.10 FLASHING, WEEP HOLES, AND CAVITY VENTS

A. General: Install embedded flashing and weep holes in masonry at shelf angles, lintels, ledges, other obstructions to downward flow of water in wall, and where indicated.

B. Install flashing as follows unless otherwise indicated:

1. Prepare masonry surfaces so they are smooth and free from projections that could puncture flashing. Where flashing is within mortar joint, place through-wall flashing on sloping bed of mortar and cover with mortar. Before covering with mortar, seal penetrations in flashing with adhesive, sealant, or tape [**as recommended by flashing manufacturer**].
2. At masonry-veneer walls, extend flashing through veneer, across air space behind veneer, and up face of sheathing at least 8 inches; with upper edge tucked under building paper or building wrap, lapping at least 4 inches.
3. At lintels and shelf angles, extend flashing a minimum of 6 inches into masonry at each end. At heads and sills, extend flashing 6 inches 150 mm at ends and turn up not less than 2 inches to form end dams.
4. Install metal drip edges beneath flexible flashing at exterior face of wall. Stop flexible flashing 1/2 inch back from outside face of wall, and adhere flexible flashing to top of metal drip edge.
5. Install metal flashing termination beneath flexible flashing at exterior face of wall. Stop flexible flashing 1/2 inch back from outside face of wall, and adhere flexible flashing to top of metal flashing termination.

C. Install reglets and nailers for flashing and other related construction where they are shown to be built into masonry.

D. Install weep holes in exterior wythes and veneers in head joints of first course of masonry immediately above embedded flashing.

1. Use [**specified weep/cavity vent products**] to form weep holes.
2. Space weep holes 24 inches o.c. unless otherwise indicated.

E. Place cavity drainage material in [**cavities**] [**airspace behind veneers**] to comply with configuration requirements for cavity drainage material in "Accessories" Article.

3.11 FIELD QUALITY CONTROL

A. Testing Agency: [**Owner will engage**] [**Engage**] special inspectors to perform tests and inspections and prepare reports. Allow inspectors access to scaffolding and work areas as needed to perform tests and inspections. Retesting of materials that fail to comply with specified requirements will be at Contractor's expense.

B. Inspections: Provide special inspections according to the "International Building Code."

1. Begin masonry construction only after inspectors have verified proportions of site-prepared mortar.

C. Testing Prior to Construction: One set of tests.

D. Testing Frequency: One set of tests for each 5000 sq. ft. of wall area or portion thereof.

E. Mortar Test (Property Specification): For each mix provided, in accordance with ASTM C780. Test mortar for [**mortar air content**] [**and**] compressive strength.

3.12 REPAIRING, POINTING, AND CLEANING

A. Remove and replace masonry units that are loose, chipped, broken, stained, or otherwise damaged or that do not match adjoining units. Install new units to match adjoining units; install in fresh mortar, pointed to eliminate evidence of replacement.

B. In-Progress Cleaning: Clean unit masonry as work progresses by dry brushing to remove mortar fins and smears before tooling joints.

C. Final Cleaning: After mortar is thoroughly set and cured, clean exposed masonry as follows:

1. Remove large mortar particles by hand with wooden paddles and nonmetallic scrape hoes or chisels.
2. Test cleaning methods on sample wall panel; leave one-half of panel uncleaned for comparison purposes. Obtain Architect's approval of sample cleaning before proceeding with cleaning of masonry.
3. Protect adjacent stone and non-masonry surfaces from contact with cleaner by covering them with liquid strippable masking agent or polyethylene film and waterproof masking tape.
4. Wet wall surfaces with water before applying cleaners; remove cleaners promptly by rinsing surfaces thoroughly with clear water.
5. Clean brick by bucket-and-brush hand-cleaning method described in BIA Technical Notes 20.
6. Clean stone trim to comply with stone supplier's written instructions.

3.13 MASONRY WASTE DISPOSAL

A. Salvageable Materials: Unless otherwise indicated, excess masonry materials are Contractor's property. At completion of unit masonry work, remove from Project site.

B. Waste Disposal as Fill Material: Dispose of clean masonry waste, including excess or soil-contaminated sand, waste mortar, and broken masonry units, by crushing and mixing with fill material as fill is placed.

1. Crush masonry waste to less than 4 inches 100 mm in each dimension.
2. Mix masonry waste with at least two parts of specified fill material for each part of masonry waste.
3. Do not dispose of masonry waste as fill within 18 inches of finished grade.

C. Excess Masonry Waste: Remove excess clean masonry waste that cannot be used as fill, as described above or recycled, and other masonry waste, and legally dispose of off Owner's property.

END OF SECTION 04 2000

SECTION 04 2200 - CONCRETE UNIT MASONRY

PART 1 - GENERAL

1.1 SUMMARY

A. Section Includes:

1. Concrete masonry units.
2. Decorative concrete masonry units.
3. Pre-faced concrete masonry units.
4. Steel reinforcing bars.

1.2 DEFINITIONS

A. CMU(s): Concrete masonry unit(s).

B. Reinforced Masonry: Masonry containing reinforcing steel in grouted cells.

1.3 ACTION SUBMITTALS

A. Product Data: For each type of product.

B. Shop Drawings: For reinforcing steel. Detail bending, lap lengths, and placement of unit masonry reinforcing bars. Comply with ACI 315.

C. Samples: For each type and color of the following:

1. CMUs.
2. Pre-faced CMUs.
3. mortar.

1.4 INFORMATIONAL SUBMITTALS

A. Material Certificates: For each type and size of product. For masonry units, include [**data on material properties**] [**material test reports substantiating compliance with requirements**].

B. Mix Designs: For each type of mortar [**and grout**]. Include description of type and proportions of ingredients.

1. Include test reports for mortar mixes required to comply with property specification. Test in accordance with ASTM C109/C109M for compressive strength, ASTM C1506 for water retention, and ASTM C91/C91M for air content.
2. Include test reports, in accordance with ASTM C1019, for grout mixes required to comply with compressive strength requirement.

1.5 QUALITY ASSURANCE

A. Sample Panels: Build sample panels to verify selections made under Sample submittals and to demonstrate aesthetic effects. Comply with requirements in Section 01 4000 "Quality Requirements" for mockups.

1. Build sample panels for [**each type of exposed unit masonry construction**] [**typical exterior wall**] [**typical interior wall**] [**typical exterior and interior walls**] in sizes approximately [**48 inches**] [**60 inches**] <**Insert dimension**> long by [**36 inches**] [**48 inches**] <**Insert dimension**> high [**by full thickness**].

1.6 FIELD CONDITIONS

A. Cold-Weather Requirements: Do not use frozen materials or materials mixed or coated with ice or frost. Do not build on frozen substrates. Remove and replace unit masonry damaged by frost or by freezing conditions. Comply with cold-weather construction requirements contained in TMS 602/ACI 530.1/ASCE 6.

B. Hot-Weather Requirements: Comply with hot-weather construction requirements contained in TMS 602/ACI 530.1/ASCE 6.

PART 2 - PRODUCTS

2.1 UNIT MASONRY, GENERAL

A. Masonry Standard: Comply with TMS 602/ACI 530.1/ASCE 6, except as modified by requirements in the Contract Documents.

B. Defective Units: Referenced masonry unit standards may allow a certain percentage of units to contain chips, cracks, or other defects exceeding limits stated. Do not use units where such defects are exposed in the completed Work.

C. Fire-Resistance Ratings: Comply with requirements for fire-resistance-rated assembly designs indicated.

1. Where fire-resistance-rated construction is indicated, units are listed and labeled by a qualified testing agency acceptable to authorities having jurisdiction.

2.2 CONCRETE MASONRY UNITS

A. Shapes: Provide shapes indicated and as follows, with exposed surfaces matching exposed faces of adjacent units unless otherwise indicated.

1. Provide special shapes for lintels, corners, jambs, sashes, movement joints, headers, bonding, and other special conditions.

B. Integral Water Repellent: Provide units made with integral water repellent [**for exposed units**] [**and**] [**where indicated**].

C. Insulated CMUs: Where indicated, units contain rigid, specially shaped, molded-polystyrene insulation units complying with ASTM C578, Type I, designed for installing in cores of masonry units.

D. CMUs: ASTM C90.

1. Unit Compressive Strength: Provide units with minimum average net-area compressive strength of [**2150 psi**] [**2800 psi**] [**3050 psi**] <**Insert value**>.
2. Density Classification: [**Lightweight**] [**Medium weight**] [**Normal weight**] [**unless otherwise indicated**].

E. Concrete Building Brick: ASTM C55.

1. Unit Compressive Strength: Provide units with minimum average net-area compressive strength of [**2800 psi**] [**3050 psi**] [**3750 psi**] [**4050 psi**] <**Insert value**>.
2. Density Classification: [**Lightweight**] [**Medium weight**] [**Normal weight**].

F. Decorative CMUs: ASTM C90.

1. Unit Compressive Strength: Provide units with minimum average net-area compressive strength of [**2150 psi**] [**2800 psi**] [**3050 psi**] <**Insert value**>.
2. Density Classification: [**Lightweight**] [**Medium weight**] [**Normal weight**].
3. Pattern and Texture:
   a. Standard pattern, ground-face finish. [**Match Architect's samples.**]
   b. Standard pattern, split-face finish. [**Match Architect's samples.**]
   c. Standard pattern, split-ribbed finish. [**Match Architect's samples.**]
   d. Scored vertically, standard finish. [**Match Architect's samples.**]

G. Pre-faced CMUs: Lightweight [**hollow**] [**solid**] concrete units complying with ASTM C90, with manufacturer's standard smooth resinous facing complying with ASTM C744.

1. Unit Compressive Strength: Provide units with minimum average net-area compressive strength of [**2150 psi**] [**2800 psi**] [**3050 psi**] <**Insert value**>.
2. Size: Manufactured with pre-faced surfaces having 1/16-inch- wide returns of facing to create 1/4-inch- wide mortar joints.
3. Colors and Patterns: [**As indicated by manufacturer's designations**] [**Match Architect's samples**] [**As selected by Architect from manufacturer's full range**].

2.3 CONCRETE LINTELS

A. Concrete Lintels: ASTM C1623, matching CMUs in color, texture, and density classification; and with reinforcing bars indicated. [**Provide lintels with net-area compressive strength not less than that of CMUs.**]

2.4 MORTAR AND GROUT MATERIALS

A. Portland Cement: ASTM C150/C150M, Type I or II, except Type III may be used for cold-weather construction. Provide natural color or white cement as required to produce mortar color indicated.

B. Hydrated Lime: ASTM C207, Type S.

C. Portland Cement-Lime Mix: Packaged blend of portland cement and hydrated lime containing no other ingredients.

D. Masonry Cement: ASTM C91/C91M.

1. <Click here to find, evaluate, and insert list of manufacturers and products.>

E. Mortar Pigments: Natural and synthetic iron oxides and chromium oxides, compounded for use in mortar mixes and complying with ASTM C979/C979M. Use only pigments with a record of satisfactory performance in masonry mortar.

1. <Click here to find, evaluate, and insert list of manufacturers and products.>

F. Colored Cement Products: Packaged blend made from [**portland cement and hydrated lime**] [**or**] [**masonry cement**] and mortar pigments, all complying with specified requirements, and containing no other ingredients.

1. Colored Portland Cement-Lime Mix:
   a. <Click here to find, evaluate, and insert list of manufacturers and products.>
2. Colored Masonry Cement:
   a. <Click here to find, evaluate, and insert list of manufacturers and products.>

G. Aggregate for Mortar: ASTM C144.

1. White-Mortar Aggregates: Natural white sand or crushed white stone.
2. Colored-Mortar Aggregates: Natural sand or crushed stone of color necessary to produce required mortar color.

H. Aggregate for Grout: ASTM C404.

I. Cold-Weather Admixture: Nonchloride, noncorrosive, accelerating admixture complying with ASTM C494/C494M, Type C, and recommended by manufacturer for use in masonry mortar of composition indicated.

1. <Click here to find, evaluate, and insert list of manufacturers and products.>

J. Water-Repellent Admixture: Liquid water-repellent mortar admixture intended for use with CMUs containing integral water repellent from same manufacturer.

1. <Click here to find, evaluate, and insert list of manufacturers and products.>

K. Water: Potable.

2.5 REINFORCEMENT

A. Uncoated-Steel Reinforcing Bars: ASTM A615/A615M or ASTM A996/A996M, Grade 60.

B. Reinforcing Bar Positioners: Wire units designed to fit into mortar bed joints spanning masonry unit cells and to hold reinforcing bars in center of cells. Units are formed from 0.148-inch steel wire, hot-dip galvanized after fabrication. Provide units designed for number of bars indicated.

1. <Click here to find, evaluate, and insert list of manufacturers and products.>

C. Masonry-Joint Reinforcement, General: ASTM A951/A951M.

1. Interior Walls: [**Mill-**] [**Hot-dip**] galvanized, carbon steel.
2. Exterior Walls: [**Hot-dip galvanized carbon**] [**Stainless**] steel.
3. Wire Size for Side Rods: [**0.148-inch**] [**0.187-inch**] diameter.
4. Wire Size for Cross Rods: [**0.148-inch**] [**0.187-inch**] diameter.
5. Spacing of Cross Rods: Not more than 16 inches o.c.
6. Provide in lengths of not less than 10 feet [**, with prefabricated corner and tee units**].

2.6 TIES AND ANCHORS

A. Materials: Provide ties and anchors specified in this article that are made from materials that comply with the following unless otherwise indicated:

1. Hot-Dip Galvanized, Carbon-Steel Wire: ASTM A82/A82M, with ASTM A153/A153M, Class B-2 coating.
2. Steel Sheet, Galvanized after Fabrication: ASTM A1008/A1008M, Commercial Steel, with ASTM A153/A153M, Class B coating.
3. Steel Plates, Shapes, and Bars: ASTM A36/A36M.

B. Adjustable Anchors for Connecting to Structural Steel Framing: Provide anchors that allow vertical or horizontal adjustment but resist tension and compression forces perpendicular to plane of wall.

1. Anchor Section for Welding to Steel Frame: Crimped 1/4-inch- diameter, hot-dip galvanized-steel wire.
2. Tie Section: Triangular-shaped wire tie made from [**0.187-inch-**] [**0.25-inch-**] diameter, hot-dip galvanized-steel wire.

C. Adjustable Anchors for Connecting to Concrete: Provide anchors that allow vertical or horizontal adjustment but resist tension and compression forces perpendicular to plane of wall.

1. Connector Section: Dovetail tabs for inserting into dovetail slots in concrete and attached to tie section; formed from [**0.060-inch- thick steel sheet, galvanized after fabrication**] [**0.105-inch- thick steel sheet, galvanized after fabrication**].
2. Tie Section: Triangular-shaped wire tie made from [**0.187-inch-**] [**0.25-inch-**] diameter, hot-dip galvanized-steel wire.
3. Corrugated-Metal Ties: Metal strips not less than 7/8 inch wide with corrugations having a wavelength of 0.3 to 0.5 inch and an amplitude of 0.06 to 0.10 inch made from [**0.060-inch- thick steel sheet, galvanized after fabrication**] [**0.075-inch- thick steel sheet, galvanized after fabrication**] [**0.105-inch- thick steel sheet, galvanized after fabrication**] with dovetail tabs for inserting into dovetail slots in concrete.

D. Partition Top Anchors: 0.105-inch- thick metal plate with a 3/8-inch- diameter metal rod 6 inches long welded to plate and with closed-end plastic tube fitted over rod that allows rod to move in and out of tube. Fabricate from steel, hot-dip galvanized after fabrication.

E. Rigid Anchors: Fabricate from steel bars 1-1/2 inches wide by 1/4 inch thick by 24 inches long, with ends turned up 2 inches or with cross pins unless otherwise indicated.

1. Corrosion Protection: [**Hot-dip galvanized to comply with ASTM A153/A153M**] [**Epoxy coating 0.020 inch thick**].

2.7 EMBEDDED FLASHING MATERIALS

A. Metal Flashing: Provide metal flashing complying with SMACNA's "Architectural Sheet Metal Manual" and as follows:

1. Stainless Steel: ASTM A240/A240M or ASTM A666, Type 304, 0.016 inch thick.
2. Copper: ASTM B370, Temper H00, cold-rolled copper sheet, 16-oz./sq. ft. weight or 0.0216 inch thick or ASTM B370, Temper H01, high-yield copper sheet, 12-oz./sq. ft. weight or 0.0162 inch thick.
3. Fabricate continuous flashings in sections 96 inches long minimum, but not exceeding 12 feet. Provide splice plates at joints of formed, smooth metal flashing.
4. Fabricate metal drip edges from stainless steel. Extend at least 3 inches into wall and 1/2 inch out from wall, with outer edge bent down 30 degrees [**and hemmed**].
5. Fabricate metal sealant stops from stainless steel. Extend at least 3 inches into wall and out to exterior face of wall. At exterior face of wall, bend metal back on itself for 3/4 inch and down into joint 1/4 inch to form a stop for retaining sealant backer rod.
6. Fabricate metal expansion-joint strips from [**stainless steel**] [**copper**] to shapes indicated.

B. Flexible Flashing: Use [**one of**] the following unless otherwise indicated:

1. Copper-Laminated Flashing: [**5-oz./sq. ft.**] [**7-oz./sq. ft.**] copper sheet bonded between two layers of glass-fiber cloth. Use only where flashing is fully concealed in masonry.
   a. <Click here to find, evaluate, and insert list of manufacturers and products.>
2. Rubberized-Asphalt Flashing: Composite flashing product consisting of a pliable, adhesive rubberized-asphalt compound, bonded to a high-density, cross-laminated polyethylene film to produce an overall thickness of not less than [**0.030 inch**] [**0.040 inch**].
   a. <Click here to find, evaluate, and insert list of manufacturers and products.>
3. Butyl Rubber Flashing: Composite, self-adhesive, flashing product consisting of a pliable, butyl rubber compound, bonded to a high-density polyethylene film, aluminum foil, or spunbonded polyolefin to produce an overall thickness of not less than [**0.030 inch**] [**0.040 inch**].
   a. <Click here to find, evaluate, and insert list of manufacturers and products.>
4. Elastomeric Thermoplastic Flashing: Composite flashing product consisting of a polyester-reinforced ethylene interpolymer alloy.
   a. <Click here to find, evaluate, and insert list of manufacturers and products.>
5. EPDM Flashing: Sheet flashing product made from ethylene-propylene-diene terpolymer, complying with ASTM D4637/D4637M, 0.040 inch thick.
   a. <Click here to find, evaluate, and insert list of manufacturers and products.>

C. Single-Wythe CMU Flashing System: System of CMU cell flashing pans and interlocking CMU web covers made from UV-resistant, high-density polyethylene. Cell flashing pans have integral weep spouts designed to be built into mortar bed joints and that extend into the cell to prevent clogging with mortar.

1. <Click here to find, evaluate, and insert list of manufacturers and products.>

D. Solder and Sealants for Sheet Metal Flashings: As specified in Section 07 6200 "Sheet Metal Flashing and Trim."

E. Adhesives, Primers, and Seam Tapes for Flashings: Flashing manufacturer's standard products or products recommended by flashing manufacturer for bonding flashing sheets to each other and to substrates.

2.8 MISCELLANEOUS MASONRY ACCESSORIES

A. Compressible Filler: Premolded filler strips complying with ASTM D1056, Grade 2A1; compressible up to 35 percent; of width and thickness indicated; formulated from [**neoprene**] [**urethane**] [**or**] [**PVC**].

B. Preformed Control-Joint Gaskets: Made from [**styrene-butadiene-rubber compound, complying with ASTM D2000, Designation M2AA-805**] [**or**] [**PVC, complying with ASTM D2287, Type PVC-65406**] and designed to fit standard sash block and to maintain lateral stability in masonry wall; size and configuration as indicated.

C. Bond-Breaker Strips: Asphalt-saturated felt complying with ASTM D226/D226M, Type I (No. 15 asphalt felt).

2.9 MASONRY-CELL FILL

A. Loose-Fill Insulation: Perlite complying with ASTM C549, Type II (surface treated for water repellency and limited moisture absorption) or Type IV (surface treated for water repellency and to limit dust generation).

B. Lightweight-Aggregate Fill: ASTM C331/C331M.

2.10 MORTAR AND GROUT MIXES

A. General: Do not use admixtures, including pigments, air-entraining agents, accelerators, retarders, water-repellent agents, antifreeze compounds, or other admixtures unless otherwise indicated.

1. Do not use calcium chloride in mortar or grout.
2. Use [**portland cement-lime**] [**or**] [**masonry cement**] mortar unless otherwise indicated.
3. For exterior masonry, use [**portland cement-lime**] [**or**] [**masonry cement**] mortar.
4. For reinforced masonry, use [**portland cement-lime**] [**or**] [**masonry cement**] mortar.
5. Add cold-weather admixture (if used) at same rate for all mortar that will be exposed to view, regardless of weather conditions, to ensure that mortar color is consistent.

B. Preblended, Dry Mortar Mix: Furnish dry mortar ingredients in form of a preblended mix. Measure quantities by weight to ensure accurate proportions, and thoroughly blend ingredients before delivering to Project site.

C. Mortar for Unit Masonry: Comply with ASTM C270, [**Proportion**] [**Property**] Specification. Provide the following types of mortar for applications stated unless another type is indicated.

1. For masonry below grade or in contact with earth, use [**Type M**] [**Type S**].
2. For reinforced masonry, use [**Type S**] [**Type N**].
3. For mortar parge coats, use [**Type S**] [**or**] [**Type N**].
4. For exterior, above-grade, load-bearing and nonload-bearing walls and parapet walls; for interior load-bearing walls; for interior nonload-bearing partitions; and for other applications where another type is not indicated, use Type N.
5. For interior nonload-bearing partitions, Type O may be used instead of Type N.

D. Pigmented Mortar: Use colored cement product [**or select and proportion pigments with other ingredients to produce color required. Do not add pigments to colored cement products**].

1. Pigments do not exceed 10 percent of portland cement by weight.
2. Pigments do not exceed 5 percent of masonry cement by weight.
3. Application: Use pigmented mortar for exposed mortar joints with the following units:
   a. Decorative CMUs.
   b. Pre-faced CMUs.

E. Colored-Aggregate Mortar: Produce required mortar color by using colored aggregates and natural color or white cement as necessary to produce required mortar color.

1. Application: Use colored-aggregate mortar for exposed mortar joints with the following units:
   a. Decorative CMUs.
   b. Pre-faced CMUs.

F. Grout for Unit Masonry: Comply with ASTM C476.

1. Use grout of type indicated or, if not otherwise indicated, of type (fine or coarse) that will comply with TMS 602/ACI 530.1/ASCE 6 for dimensions of grout spaces and pour height.
2. Proportion grout in accordance with ASTM C476, [**Table 1**] [**or**] [**paragraph 4.2.2 for specified 28-day compressive strength indicated, but not less than 2000 psi**].
3. Provide grout with a slump of [**8 to 11 inches**] [**10 to 11 inches**] as measured in accordance with ASTM C143/C143M.

PART 3 - EXECUTION

3.1 INSTALLATION, GENERAL

A. Use full-size units without cutting if possible. If cutting is required to provide a continuous pattern or to fit adjoining construction, cut units with motor-driven saws; provide clean, sharp, unchipped edges. Allow units to dry before laying unless wetting of units is specified. Install cut units with cut surfaces and, where possible, cut edges concealed.

3.2 TOLERANCES

A. Dimensions and Locations of Elements:

1. For dimensions in cross section or elevation, do not vary by more than plus 1/2 inch or minus 1/4 inch.
2. For location of elements in plan, do not vary from that indicated by more than plus or minus 1/2 inch.
3. For location of elements in elevation, do not vary from that indicated by more than plus or minus 1/4 inch in a story height or 1/2 inch total.

B. Lines and Levels:

1. For bed joints and top surfaces of bearing walls, do not vary from level by more than 1/4 inch in 10 feet, or 1/2-inch maximum.
2. For conspicuous horizontal lines, such as lintels, sills, parapets, and reveals, do not vary from level by more than 1/8 inch in 10 feet, 1/4 inch in 20 feet, or 1/2-inch maximum.
3. For vertical lines and surfaces, do not vary from plumb by more than 1/4 inch in 10 feet, 3/8 inch in 20 feet, or 1/2-inch maximum.
4. For conspicuous vertical lines, such as external corners, door jambs, reveals, and expansion and control joints, do not vary from plumb by more than 1/8 inch in 10 feet, 1/4 inch in 20 feet, or 1/2-inch maximum.
5. For lines and surfaces, do not vary from straight by more than 1/4 inch in 10 feet, 3/8 inch in 20 feet, or 1/2-inch maximum.

C. Joints:

1. For bed joints, do not vary from thickness indicated by more than plus or minus 1/8 inch, with a maximum thickness limited to 1/2 inch.
2. For head and collar joints, do not vary from thickness indicated by more than plus 3/8 inch or minus 1/4 inch.
3. For exposed head joints, do not vary from thickness indicated by more than plus or minus 1/8 inch.

3.3 LAYING MASONRY WALLS

A. Lay out walls in advance for accurate spacing of surface bond patterns with uniform joint thicknesses and for accurate location of openings, movement-type joints, returns, and offsets. Avoid using less-than-half-size units, particularly at corners, jambs, and, where possible, at other locations.

B. Bond Pattern for Exposed Masonry: Unless otherwise indicated, lay exposed masonry in running bond; do not use units with less-than-nominal 4-inch horizontal face dimensions at corners or jambs.

C. Built-in Work: As construction progresses, build in items specified in this and other Sections. Fill in solidly with masonry around built-in items.

D. Fill space between steel frames and masonry solidly with mortar unless otherwise indicated.

E. Where built-in items are to be embedded in cores of hollow masonry units, place a layer of metal lath, wire mesh, or plastic mesh in the joint below, and rod mortar or grout into core.

F. Fill cores in hollow CMUs with grout 24 inches under bearing plates, beams, lintels, posts, and similar items unless otherwise indicated.

3.4 MORTAR BEDDING AND JOINTING

A. Lay hollow CMUs as follows:

1. Bed face shells in mortar and make head joints of depth equal to bed joints.
2. Bed webs in mortar in all courses of piers, columns, and pilasters.
3. Bed webs in mortar in grouted masonry, including starting course on footings.
4. Fully bed entire units, including areas under cells, at starting course on footings where cells are not grouted.

B. Lay solid CMUs with completely filled bed and head joints; butter ends with sufficient mortar to fill head joints and shove into place. Do not deeply furrow bed joints or slush head joints.

C. Tool exposed joints slightly concave when thumbprint hard, using a jointer larger than joint thickness unless otherwise indicated.

D. Cut joints flush for masonry walls to receive plaster or other direct-applied finishes (other than paint) unless otherwise indicated.

3.5 MASONRY-CELL FILL

A. Pour [**loose-fill insulation**] [**lightweight-aggregate fill**] into cavities to fill void spaces. Maintain inspection ports to show presence of fill at extremities of each pour area. Close the ports after filling has been confirmed. Limit the fall of fill to one story high, but not more than 20 feet.

B. Install molded-polystyrene insulation units into masonry unit cells before laying units.

3.6 MASONRY-JOINT REINFORCEMENT

A. General: Install entire length of longitudinal side rods in mortar with a minimum cover of 5/8 inch on exterior side of walls, 1/2 inch elsewhere. Lap reinforcement a minimum of 6 inches.

1. Space reinforcement not more than 16 inches o.c.
2. Space reinforcement not more than 8 inches o.c. in foundation walls and parapet walls.
3. Provide reinforcement not more than 8 inches above and below wall openings and extending 12 inches beyond openings [**in addition to continuous reinforcement**].

B. Interrupt joint reinforcement at control and expansion joints unless otherwise indicated.

C. Provide continuity at wall intersections by using prefabricated T-shaped units.

D. Provide continuity at corners by using prefabricated L-shaped units.

3.7 ANCHORING MASONRY TO STRUCTURAL STEEL AND CONCRETE

A. Anchor masonry to structural steel and concrete, where masonry abuts or faces structural steel or concrete, to comply with the following:

1. Provide an open space not less than [**1/2 inch**] [**1 inch**] [**2 inches**] wide between masonry and structural steel or concrete unless otherwise indicated. Keep open space free of mortar and other rigid materials.
2. Anchor masonry with anchors embedded in masonry joints and attached to structure.
3. Space anchors as indicated, but not more than 24 inches o.c. vertically and 36 inches o.c. horizontally.

3.8 FLASHING

A. General: Install embedded flashing at ledges and other obstructions to downward flow of water in wall where indicated.

B. Install flashing as follows unless otherwise indicated:

1. Prepare masonry surfaces so they are smooth and free from projections that could puncture flashing. Where flashing is within mortar joint, place through-wall flashing on sloping bed of mortar and cover with mortar. Before covering with mortar, seal penetrations in flashing with adhesive, sealant, or tape [**as recommended by flashing manufacturer**].
2. At lintels, extend flashing a minimum of 6 inches into masonry at each end. At heads and sills, extend flashing 6 inches at ends and turn up not less than 2 inches to form end dams.
3. Install metal drip edges beneath flexible flashing at exterior face of wall. Stop flexible flashing 1/2 inch back from outside face of wall, and adhere flexible flashing to top of metal drip edge.
4. Install metal flashing termination beneath flexible flashing at exterior face of wall. Stop flexible flashing 1/2 inch back from outside face of wall, and adhere flexible flashing to top of metal flashing termination.

C. Install single-wythe CMU flashing system in bed joints of CMU walls where indicated to comply with manufacturer's written instructions. Install CMU cell pans with upturned edges located below face shells and webs of CMUs above and with weep spouts aligned with face of wall. Install CMU web covers so that they cover upturned edges of CMU cell pans at CMU webs and extend from face shell to face shell.

3.9 REINFORCED UNIT MASONRY

A. Temporary Formwork and Shores: Construct formwork and shores as needed to support reinforced masonry elements during construction.

1. Construct formwork to provide shape, line, and dimensions of completed masonry as indicated. Make forms sufficiently tight to prevent leakage of mortar and grout. Brace, tie, and support forms to maintain position and shape during construction and curing of reinforced masonry.

2. Do not remove forms and shores until reinforced masonry members have hardened sufficiently to carry their own weight and that of other loads that may be placed on them during construction.

B. Placing Reinforcement: Comply with requirements in TMS 602/ACI 530.1/ASCE 6.

C. Grouting: Do not place grout until entire height of masonry to be grouted has attained enough strength to resist grout pressure.

1. Comply with requirements in TMS 602/ACI 530.1/ASCE 6 for cleanouts and for grout placement, including minimum grout space and maximum pour height.
2. Limit height of vertical grout pours to not more than [**60 inches**] [**12.67 ft.**] <**Insert height**>.

3.10 FIELD QUALITY CONTROL

A. Testing and Inspecting: Owner will engage special inspectors to perform tests and inspections and prepare reports. Allow inspectors access to scaffolding and work areas as needed to perform tests and inspections. Retesting of materials that fail to comply with specified requirements is done at Contractor's expense.

B. Inspections: Special inspections in accordance with Level [**B**] [**C**] in TMS 402/ACI 530/ASCE 5.

1. Begin masonry construction only after inspectors have verified proportions of site-prepared mortar.
2. Place grout only after inspectors have verified compliance of grout spaces and of grades, sizes, and locations of reinforcement.
3. Place grout only after inspectors have verified proportions of site-prepared grout.

C. Testing Prior to Construction: One set of tests.

D. Testing Frequency: One set of tests for each 5000 sq. ft. of wall area or portion thereof.

E. Concrete Masonry Unit Test: For each type of unit provided, in accordance with ASTM C140 for compressive strength.

F. Mortar Aggregate Ratio Test (Proportion Specification): For each mix provided, in accordance with ASTM C780.

G. Mortar Test (Property Specification): For each mix provided, in accordance with ASTM C780. Test mortar for [**mortar air content**] [**and**] [**compressive strength**].

H. Grout Test (Compressive Strength): For each mix provided, in accordance with ASTM C1019.

I. Prism Test: For each type of construction provided, in accordance with ASTM C1314 at [**seven days and at**]28 days.

3.11 PARGING

A. Parge exterior faces of below-grade masonry walls, where indicated, in two uniform coats to a total thickness of 3/4 inch. Dampen wall before applying first coat, and scarify first coat to ensure full bond to subsequent coat.

B. Use a steel-trowel finish to produce a smooth, flat, dense surface with a maximum surface variation of 1/8 inch per foot. Form a wash at top of parging and a cove at bottom.

C. Damp-cure parging for at least 24 hours and protect parging until cured.

3.12 REPAIRING, POINTING, AND CLEANING

A. In-Progress Cleaning: Clean unit masonry as work progresses by dry brushing to remove mortar fins and smears before tooling joints.

B. Final Cleaning: After mortar is thoroughly set and cured, clean exposed masonry as follows:

1. Test cleaning methods on sample wall panel; leave one-half of panel uncleaned for comparison purposes.
2. Clean concrete masonry by applicable cleaning methods indicated in NCMA TEK 8-4A.

3.13 MASONRY WASTE DISPOSAL

A. Waste Disposal as Fill Material: Dispose of clean masonry waste, including excess or soil-contaminated sand, waste mortar, and broken masonry units, by crushing and mixing with fill material as fill is placed.

1. Do not dispose of masonry waste as fill within 18 inches of finished grade.

B. Masonry Waste Recycling: Return broken CMUs not used as fill to manufacturer for recycling.

C. Excess Masonry Waste: Remove excess clean masonry waste that cannot be used as fill, as described above or recycled, and other masonry waste, and legally dispose of off Owner's property.

END OF SECTION 04 2200

SECTION 05 1200 - STRUCTURAL STEEL FRAMING

PART 1 - GENERAL

1.1 RELATED DOCUMENTS

A. Drawings and general provisions of the Contract, including General and Supplementary Conditions and Division 01 Specification Sections, apply to this Section.

1.2 SUMMARY

A. Section Includes:

1. Structural steel.
2. Prefabricated building columns.
3. Shear stud connectors, shop welded.
4. Shrinkage-resistant grout.

B. Related Requirements:

1. Section 05 5000 "Metal Fabrications" for steel lintels and shelf angles not attached to structural-steel frame and other steel items not defined as structural steel.
2. Section 09 9113 "Exterior Painting" and Section 09 9123 "Interior Painting" and Section 09 9600 "High-Performance Coatings" for painting requirements.

1.3 DEFINITIONS

A. Structural Steel: Elements of the structural frame indicated on Drawings and as described in ANSI/AISC 303.

B. Seismic-Load-Resisting System: Elements of structural-steel frame designated as "SLRS" or along grid lines designated as "SLRS" on Drawings, including columns, beams, and braces and their connections.

C. Heavy Sections: Rolled and built-up sections as follows:

1. Shapes included in ASTM A6/A6M with flanges thicker than 1-1/2 inches (38 mm).
2. Welded built-up members with plates thicker than 2 inches (50 mm).
3. Column base plates thicker than 2 inches (50 mm).

D. Protected Zone: Structural members or portions of structural members indicated as "protected zone" on Drawings. Connections of structural and nonstructural elements to protected zones are limited.

E. Demand-Critical Welds: Those welds, the failure of which would result in significant degradation of the strength and stiffness of the seismic-load-resisting system and which are indicated as "demand critical" or "seismic critical" on Drawings.

1.4 COORDINATION

A. Coordinate selection of shop primers with topcoats to be applied over them. Comply with paint and coating manufacturers' written recommendations to ensure that shop primers and topcoats are compatible with one another.

B. Coordinate installation of anchorage items to be embedded in or attached to other construction without delaying the Work. Provide setting diagrams, sheet metal templates, instructions, and directions for installation.

1.5 PREINSTALLATION MEETINGS

A. Preinstallation Conference: Conduct conference at [**Project site**] .

1.6 ACTION SUBMITTALS

A. Product Data:

1. Structural-steel materials.
2. High-strength, bolt-nut-washer assemblies.
3. Shear stud connectors.
4. Anchor rods.
5. Threaded rods.
6. Forged-steel hardware.
7. Slide bearings.
8. Prefabricated building columns.
9. Shop primer.
10. Galvanized-steel primer.
11. Etching cleaner.
12. Galvanized repair paint.
13. Shrinkage-resistant grout.

B. Shop Drawings: Show fabrication of structural-steel components.

1. Include details of cuts, connections, splices, camber, holes, and other pertinent data.
2. Include embedment Drawings.
3. Indicate welds by standard AWS symbols, distinguishing between shop and field welds, and show size, length, and type of each weld. Show backing bars that are to be removed and supplemental fillet welds where backing bars are to remain.
4. Indicate type, size, and length of bolts, distinguishing between shop and field bolts. Identify pretensioned and slip-critical, high-strength bolted connections.
5. Identify members and connections of the seismic-load-resisting system.
6. Indicate locations and dimensions of protected zones.
7. Identify demand-critical welds.
8. Identify members not to be shop primed.

C. Welding Procedure Specifications (WPSs) and Procedure Qualification Records (PQRs): Provide in accordance with AWS D1.1/D1.1M for each welded joint whether prequalified or qualified by testing, including the following:

1. Power source (constant current or constant voltage).
2. Electrode manufacturer and trade name, for demand-critical welds.

D. Delegated-Design Submittal: For structural-steel connections indicated on Drawings to comply with design loads, include analysis data signed and sealed by the qualified professional engineer responsible for their preparation.

1.7 INFORMATIONAL SUBMITTALS

A. Qualification Data: For Installer, fabricator, shop-painting applicators, professional engineer and testing agency.

B. Welding certificates.

C. Paint Compatibility Certificates: From manufacturers of topcoats applied over shop primers, certifying that shop primers are compatible with topcoats.

D. Mill test reports for structural-steel materials, including chemical and physical properties.

E. Product Test Reports: For the following:

1. Bolts, nuts, and washers, including mechanical properties and chemical analysis.
2. Direct-tension indicators.
3. Tension-control, high-strength, bolt-nut-washer assemblies.
4. Shear stud connectors.

F. Survey of existing conditions.

G. Source quality-control reports.

H. Field quality-control reports.

1.8 QUALITY ASSURANCE

A. Fabricator Qualifications: A qualified fabricator that participates in the AISC Quality Certification Program and is designated an AISC-Certified Plant, Category BU or is accredited by the IAS Fabricator Inspection Program for Structural Steel (Acceptance Criteria 172).

B. Installer Qualifications: A qualified Installer who participates in the AISC Quality Certification Program and is designated an AISC-Certified Erector, [**Category ACSE**] .

C. Shop-Painting Applicators: Qualified in accordance with AISC's Sophisticated Paint Endorsement P1 or to SSPC-QP 3.

D. Welding Qualifications: Qualify procedures and personnel in accordance with AWS D1.1/D1.1M.

1. Welders and welding operators performing work on bottom-flange, demand-critical welds shall pass the supplemental welder qualification testing, as required by AWS D1.8/D1.8M.

FCAW-S and FCAW-G shall be considered separate processes for welding personnel qualification.

1.9 DELIVERY, STORAGE, AND HANDLING

A. Store materials to permit easy access for inspection and identification. Keep steel members off ground and spaced by using pallets, dunnage, or other supports and spacers. Protect steel members and packaged materials from corrosion and deterioration.

1. Do not store materials on structure in a manner that might cause distortion, damage, or overload to members or supporting structures. Repair or replace damaged materials or structures as directed.

B. Store fasteners in a protected place in sealed containers with manufacturer's labels intact.

1. Fasteners may be repackaged provided Owner's testing and inspecting agency observes repackaging and seals containers.
2. Clean and relubricate bolts and nuts that become dry or rusty before use.
3. Comply with manufacturers' written recommendations for cleaning and lubricating ASTM F3125/F3125M, Grade F1852 bolt assemblies and for retesting bolt assemblies after lubrication.

PART 2 - PRODUCTS

2.1 PERFORMANCE REQUIREMENTS

A. Comply with applicable provisions of the following specifications and documents:

1. ANSI/AISC 303.
2. ANSI/AISC 341.
3. ANSI/AISC 360.
4. RCSC's "Specification for Structural Joints Using High-Strength Bolts."

B. Connection Design Information:

1. Option 1: Connection designs have been completed and connections indicated on the Drawings.

2.2 STRUCTURAL-STEEL MATERIALS

A. W-Shapes: [**ASTM A992/A992M**] .

B. Channels, Angles : [**ASTM A36/A36M**] .

C. Plate and Bar: [**ASTM A36/A36M**] .

D. Corrosion-Resisting (Weathering) Structural-Steel Shapes, Plates, and Bars: ASTM A588/A588M, 50 ksi (345 MPa).

E. Cold-Formed Hollow Structural Sections: [**ASTM A500/A500M, Grade B**] structural tubing.

F. Corrosion-Resisting (Weathering), Cold-Formed Hollow Structural Sections: ASTM A847/A847M structural tubing.

G. Steel Pipe: ASTM A53/A53M, Type E or Type S, Grade B.

1. Weight Class: Standard.
2. Finish: Black except where indicated to be galvanized.

H. Steel Castings: ASTM A216/A216M, Grade WCB, with supplementary requirement S11.

I. Steel Forgings: ASTM A668/A668M.

J. Welding Electrodes: Comply with AWS requirements.

2.3 BOLTS AND CONNECTORS

A. High-Strength A325 Bolts, Nuts, and Washers: ASTM F3125/F3125M, Grade A325, Type 1, heavy-hex steel structural bolts; ASTM A563, Grade DH, heavy-hex carbon-steel nuts; and ASTM F436/F436M, Type 1, hardened carbon-steel washers; all with plain finish.

1. Direct-Tension Indicators: ASTM F959/F959M, Type 325-1, compressible-washer type with plain finish.

B. High-Strength A490 Bolts, Nuts, and Washers: ASTM F3125/F3125M, Grade A490, Type 1, heavy-hex steel structural bolts [**or Grade F2280 tension-control, bolt-nut-washer assemblies with splined ends**]; ASTM A563, Grade DH, heavy-hex carbon-steel nuts; and ASTM F436/F436M, Type 1, hardened carbon-steel washers; all with plain finish.

1. Direct-Tension Indicators: ASTM F959/F959M, Type 490-1, compressible-washer type with plain finish.

C. Zinc-Coated High-Strength A325 Bolts, Nuts, and Washers: ASTM F3125/F3125M, Grade A325, Type 1, heavy-hex steel structural bolts; ASTM A563, Grade DH, heavy-hex carbon-steel nuts; and ASTM F436/F436M, Type 1, hardened carbon-steel washers.

1. Finish: [**Hot-dip zinc coating**] .
2. Direct-Tension Indicators: ASTM F959/F959M, Type 325-1, compressible-washer type with [**mechanically deposited zinc coating**] finish.

D. Tension-Control, High-Strength Bolt-Nut-Washer Assemblies: ASTM F3125/F3125M, Grade F1852, Type 1, [**heavy-hex**] head assemblies, consisting of steel structural bolts with splined ends; ASTM A563, Grade DH, heavy-hex carbon-steel nuts; and ASTM F436/F436M, Type 1, hardened carbon-steel washers.

1. Finish: [**Plain**] .

E. Shear Stud Connectors: ASTM A108, AISI C-1015 through C-1020, headed-stud type, cold-finished carbon steel; AWS D1.1/D1.1M, Type B.

2.4 RODS

A. Unheaded Anchor Rods: [**ASTM F1554, Grade 36**] [**ASTM F1554, Grade 55, weldable**].

1. Configuration: [**Straight**] .
2. Nuts: ASTM A563 (ASTM A563M) heavy-hex carbon steel.
3. Plate Washers: ASTM A36/A36M carbon steel.
4. Washers: ASTM F436 (ASTM F436M), Type 1, hardened carbon steel.
5. Finish: [**Plain**] .

B. Headed Anchor Rods: ASTM F1554, Grade 36, straight.

1. Nuts: ASTM A563 (ASTM A563M) heavy-hex carbon steel.
2. Plate Washers: ASTM A36/A36M carbon steel.
3. Washers: ASTM F436 (ASTM F436M), Type 1, hardened carbon steel.
4. Finish: Plain.

C. Threaded Rods: [**ASTM A36/A36M**] .

1. Nuts: ASTM A 63 (ASTM A563M) heavy-hex carbon steel.
2. Washers: ASTM F436 (ASTM F436M), Type 1, hardened carbon steel.
3. Finish: [**Plain**] .

2.5 PRIMER

A. Steel Primer:

1. Comply with [**Section 09 9113 "Exterior Painting," Section 09 9123 "Interior Painting," and Section 09 9600 "High-Performance Coatings."**]
2. SSPC-Paint 23, latex primer.
3. Fabricator's standard lead- and chromate-free, nonasphaltic, rust-inhibiting primer complying with MPI#79 and compatible with topcoat.

B. Galvanized-Steel Primer: [**MPI#26**] .

1. Etching Cleaner: MPI#25, for galvanized steel.
2. Galvanizing Repair Paint: [**MPI#18, MPI#19, or SSPC-Paint 20**] .

2.6 SHRINKAGE-RESISTANT GROUT

A. Metallic, Shrinkage-Resistant Grout: ASTM C1107/C1107M, factory-packaged, metallic aggregate grout, mixed with water to consistency suitable for application and a 30-minute working time.

B. Nonmetallic, Shrinkage-Resistant Grout: ASTM C1107/C1107M, factory-packaged, nonmetallic aggregate grout, noncorrosive and nonstaining, mixed with water to consistency suitable for application and a 30-minute working time.

2.7 FABRICATION

A. Structural Steel: Fabricate and assemble in shop to greatest extent possible. Fabricate in accordance with ANSI/AISC 303 and to ANSI/AISC 360.

1. Fabricate beams with rolling camber up.
2. Identify high-strength structural steel in accordance with ASTM A6/A6M and maintain markings until structural-steel framing has been erected.
3. Mark and match-mark materials for field assembly.
4. Complete structural-steel assemblies, including welding of units, before starting shop-priming operations.
5. Thermal Cutting: Perform thermal cutting by machine to greatest extent possible.
   a. Plane thermally cut edges to be welded to comply with requirements in AWS D1.1/D1.1M.

B. Bolt Holes: Cut, drill, or punch standard bolt holes perpendicular to metal surfaces.

C. Finishing: Accurately finish ends of columns and other members transmitting bearing loads.

D. Cleaning: Clean and prepare steel surfaces that are to remain unpainted in accordance with SSPC-SP 1.

E. Shear Stud Connectors: Prepare steel surfaces as recommended by manufacturer of shear connectors. Weld using automatic end welding of headed-stud shear connectors in accordance with AWS D1.1/D1.1M and manufacturer's written instructions.

F. Steel Wall-Opening Framing: Select true and straight members for fabricating steel wall-opening framing to be attached to structural-steel frame. Straighten as required to provide uniform, square, and true members in completed wall framing. Build up welded framing, weld exposed joints continuously, and grind smooth.

G. Welded-Steel Door Frames: Build up welded-steel door frames attached to structural-steel frame. Weld exposed joints continuously and grind smooth. Plug-weld fixed steel bar stops to frames. Secure removable stops to frames with countersunk machine screws, uniformly spaced not more than 10 inches (250 mm) o.c. unless otherwise indicated on Drawings.

H. Holes: Provide holes required for securing other work to structural steel and for other work to pass through steel members.

1. Cut, drill, or punch holes perpendicular to steel surfaces. Do not thermally cut bolt holes or enlarge holes by burning.
2. Baseplate Holes: Cut, drill, mechanically thermal cut, or punch holes perpendicular to steel surfaces.
3. Weld threaded nuts to framing and other specialty items indicated to receive other work.

2.8 SHOP CONNECTIONS

A. High-Strength Bolts: Shop install high-strength bolts in accordance with RCSC's "Specification for Structural Joints Using High-Strength Bolts" for type of bolt and type of joint specified.

1. Joint Type: [**Snug tightened**] .

B. Weld Connections: Comply with AWS D1.1/D1.1M for tolerances, appearances, welding procedure specifications, weld quality, and methods used in correcting welding work.

1. Assemble and weld built-up sections by methods that maintain true alignment of axes without exceeding tolerances in ANSI/AISC 303 for mill material.

2.9 GALVANIZING

A. Hot-Dip Galvanized Finish: Apply zinc coating by the hot-dip process to structural steel in accordance with ASTM A123/A123M.

1. Fill vent and drain holes that are exposed in the finished Work unless they function as weep holes, by plugging with zinc solder and filing off smooth.
2. Galvanize lintels and shelf angles attached to structural-steel frame and located in exterior walls.

2.10 SHOP PRIMING

A. Shop prime steel surfaces, except the following:

1. Surfaces embedded in concrete or mortar. Extend priming of partially embedded members to a depth of 2 inches.
2. Surfaces to be field welded.
3. Surfaces of high-strength bolted, slip-critical connections.
4. Surfaces to receive sprayed fire-resistive materials (applied fireproofing).
5. Galvanized surfaces [**unless indicated to be painted**].
6. Corrosion-resisting (weathering) steel surfaces.
7. Surfaces enclosed in interior construction.

B. Surface Preparation of Steel: Clean surfaces to be painted. Remove loose rust and mill scale and spatter, slag, or flux deposits. Prepare surfaces in accordance with the following specifications and standards:

1. SSPC-SP 2.
2. SSPC-SP 3.
3. SSPC-SP 7 (WAB)/NACE WAB-4.
4. SSPC-SP 14 (WAB)/NACE WAB-8.
5. SSPC-SP 11.
6. SSPC-SP 6 (WAB)/NACE WAB-3.
7. SSPC-SP 10 (WAB)/NACE WAB-2.
8. SSPC-SP 5 (WAB)/NACE WAB-1.
9. SSPC-SP 8.

C. Surface Preparation of Galvanized Steel: Prepare galvanized-steel surfaces for shop priming by thoroughly cleaning steel of grease, dirt, oil, flux, and other foreign matter, and treating with etching cleaner .

D. Priming: Immediately after surface preparation, apply primer in accordance with manufacturer's written instructions and at rate recommended by SSPC to provide a minimum dry film thickness of 1.5 mils. Use priming methods that result in full coverage of joints, corners, edges, and exposed surfaces.

1. Stripe paint corners, crevices, bolts, welds, and sharp edges.
2. Apply two coats of shop paint to surfaces that are inaccessible after assembly or erection. Change color of second coat to distinguish it from first.

2.11 SOURCE QUALITY CONTROL

A. Testing Agency: [**Owner will engage**] a qualified testing agency to perform shop tests and inspections.

1. Allow testing agency access to places where structural-steel work is being fabricated or produced to perform tests and inspections.
2. Bolted Connections: Inspect [**and test**] shop-bolted connections in accordance with RCSC's "Specification for Structural Joints Using High-Strength Bolts."
3. Welded Connections: Visually inspect shop-welded connections in accordance with AWS D1.1/D1.1M and the following inspection procedures, at testing agency's option:
   a. Liquid Penetrant Inspection: ASTM E165/E165M.
   b. Magnetic Particle Inspection: ASTM E709; performed on root pass and on finished weld. Cracks or zones of incomplete fusion or penetration are not accepted.
   c. Ultrasonic Inspection: ASTM E164.
   d. Radiographic Inspection: ASTM E94/E94M.
4. In addition to visual inspection, test and inspect shop-welded shear stud connectors in accordance with requirements in AWS D1.1/D1.1M for stud welding and as following:
   a. Perform bend tests if visual inspections reveal either a less-than-continuous 360-degree flash or welding repairs to any shear stud connector.
   b. Conduct tests in accordance with requirements in AWS D1.1/D1.1M on additional shear stud connectors if weld fracture occurs on shear stud connectors already tested.
5. Prepare test and inspection reports.

PART 3 - EXECUTION

3.1 EXAMINATION

A. Verify, with certified steel erector present, elevations of concrete- and masonry-bearing surfaces and locations of anchor rods, bearing plates, and other embedments for compliance with requirements.

1. Prepare a certified survey of existing conditions. Include bearing surfaces, anchor rods, bearing plates, and other embedments showing dimensions, locations, angles, and elevations.

B. Prepare a certified survey of existing conditions. Include bearing surfaces, anchor rods, bearing plates, and other embedments showing dimensions, locations, angles, and elevations.

3.2 PREPARATION

A. Provide temporary shores, guys, braces, and other supports during erection to keep structural steel secure, plumb, and in alignment against temporary construction loads and loads equal in intensity to design loads. Remove temporary supports when permanent structural steel, connections, and bracing are in place unless otherwise indicated on Drawings.

1. Do not remove temporary shoring supporting composite deck construction and structural-steel framing until cast-in-place concrete has attained its design compressive strength.

3.3 ERECTION

A. Set structural steel accurately in locations and to elevations indicated and in accordance with ANSI/AISC 303 and ANSI/AISC 360.

B. Baseplates [**Bearing Plates**] [**and**] [**Leveling Plates**]: Clean concrete- and masonry-bearing surfaces of bond-reducing materials, and roughen surfaces prior to setting plates. Clean bottom surface of plates.

1. Set plates for structural members on wedges, shims, or setting nuts as required.
2. Weld plate washers to top of baseplate.
3. [**Snug-tighten**] anchor rods after supported members have been positioned and plumbed. Do not remove wedges or shims but, if protruding, cut off flush with edge of plate before packing with grout.
4. Promptly pack shrinkage-resistant grout solidly between bearing surfaces and plates, so no voids remain. Neatly finish exposed surfaces; protect grout and allow to cure. [**Comply with manufacturer's written installation instructions for grouting.**]

C. Maintain erection tolerances of structural steel within ANSI/AISC 303.

D. Align and adjust various members that form part of complete frame or structure before permanently fastening. Before assembly, clean bearing surfaces and other surfaces that are in permanent contact with members. Perform necessary adjustments to compensate for discrepancies in elevations and alignment.

1. Level and plumb individual members of structure. Slope roof framing members to slopes indicated on Drawings.
2. Make allowances for difference between temperature at time of erection and mean temperature when structure is completed and in service.

E. Splice members only where indicated.

F. Do not use thermal cutting during erection.

G. Do not enlarge unfair holes in members by burning or using drift pins. Ream holes that must be enlarged to admit bolts.

3.4 FIELD CONNECTIONS

A. High-Strength Bolts: Install high-strength bolts in accordance with RCSC's "Specification for Structural Joints Using High-Strength Bolts" for bolt and joint type specified.

1. Joint Type: [**Snug tightened**] .

B. Weld Connections: Comply with AWS D1.1/D1.1M for tolerances, appearances, welding procedure specifications, weld quality, and methods used in correcting welding work.

1. Comply with ANSI/AISC 303 and ANSI/AISC 360 for bearing, alignment, adequacy of temporary connections, and removal of paint on surfaces adjacent to field welds.
2. Remove backing bars or runoff tabs where indicated, back gouge, and grind steel smooth.
3. Assemble and weld built-up sections by methods that maintain true alignment of axes without exceeding tolerances in ANSI/AISC 303 for mill material.

3.5 PREFABRICATED BUILDING COLUMNS

A. Install prefabricated building columns to comply with ANSI/AISC 360, manufacturer's written recommendations, and requirements of testing and inspecting agency that apply to the fire-resistance rating indicated.

3.6 FIELD QUALITY CONTROL

A. Special Inspections: Owner will engage a special inspector to perform the following special inspections:

1. Verify structural-steel materials and inspect steel frame joint details.
2. Verify weld materials and inspect welds.
3. Verify connection materials and inspect high-strength bolted connections.

B. Testing Agency: [**Owner will engage**] a qualified testing agency to perform tests and inspections.

1. Bolted Connections: Inspect [**and test**] bolted connections in accordance with RCSC's "Specification for Structural Joints Using High-Strength Bolts."
2. Welded Connections: Visually inspect field welds in accordance with AWS D1.1/D1.1M.
   a. In addition to visual inspection, test and inspect field welds in accordance with AWS D1.1/D1.1M and the following inspection procedures, at testing agency's option:
      1) Liquid Penetrant Inspection: ASTM E165/E165M.
      2) Magnetic Particle Inspection: ASTM E709; performed on root pass and on finished weld. Cracks or zones of incomplete fusion or penetration are not accepted.
      3) Ultrasonic Inspection: ASTM E164.
      4) Radiographic Inspection: ASTM E94/E94M.

3.7 PROTECTION

A. Galvanized Surfaces: Clean areas where galvanizing is damaged or missing, and repair galvanizing to comply with ASTM A780/A780M.

B. Touchup Painting: Immediately after erection, clean exposed areas where primer is damaged or missing, and paint with the same material as used for shop painting to comply with SSPC-PA 1 for touching up shop-painted surfaces.

   1. Clean and prepare surfaces by SSPC-SP 2 hand-tool cleaning or SSPC-SP 3 power-tool cleaning.

C. Touchup Painting: Cleaning and touchup painting are specified in Section 09 9113 "Exterior Painting."

D. Touchup Priming: Cleaning and touchup priming are specified in Section 09 9600 "High-Performance Coatings."

END OF SECTION 05 1200

SECTION 05 5000 - METAL FABRICATIONS

PART 1 - GENERAL

1.1 RELATED DOCUMENTS

A. Drawings and general provisions of the Contract, including General and Supplementary Conditions and Division 01 Specification Sections, apply to this Section.

1.2 SUMMARY

A. Section Includes:

1. Shelf angles.
2. Metal ladders.
3. Alternating tread devices.
4. Elevator pit sump covers.
5. Metal bollards.
6. Downspout guards.

B. Products furnished, but not installed, under this Section include the following:

1. Loose steel lintels.
2. Anchor bolts, steel pipe sleeves, slotted-channel inserts, and wedge-type inserts indicated to be cast into concrete or built into unit masonry.
3. Steel weld plates and angles for casting into concrete for applications where they are not specified in other Sections.

C. Related Requirements:

1. Section 04 2000 "Unit Masonry" for installing loose lintels, anchor bolts, and other items built into unit masonry.
2. Section 05 1200 "Structural Steel Framing" for steel framing, supports, elevator machine beams, hoist beams, divider beams, door frames, and other steel items attached to the structural-steel framing.
3. Section 07 7200 "Roof Accessories" for manufactured metal roof walkways and metal roof stairs.
4. Section 32 9300 "Plants" for tree grates.

1.3 COORDINATION

A. Coordinate selection of shop primers with topcoats to be applied over them. Comply with paint and coating manufacturers' written instructions to ensure that shop primers and topcoats are compatible with one another.

B. Coordinate installation of metal fabrications that are anchored to or that receive other work. Furnish setting drawings, templates, and directions for installing anchorages, including sleeves,

concrete inserts, anchor bolts, and items with integral anchors, that are to be embedded in concrete or masonry. Deliver such items to Project site in time for installation.

1.4 ACTION SUBMITTALS

A. Product Data: For the following:

1. Fasteners.
2. Shop primers.
3. Shrinkage-resisting grout.
4. Manufactured metal ladders.
5. Alternating tread devices.
6. Metal bollards.
7. [**Pipe**] [**Downspout**] guards.
8. Metal downspout boots.

B. Shop Drawings: Show fabrication and installation details. Include plans, elevations, sections, and details of metal fabrications and their connections. Show anchorage and accessory items. Provide Shop Drawings for the following:

1. Steel framing and supports for ceiling-hung toilet compartments.
2. Elevator machine beams, hoist beams, and divider beams.
3. Steel shapes for supporting elevator door sills.
4. Shelf angles.
5. Metal ladders.
6. Alternating tread devices.
7. Elevator pit sump covers.
8. Metal bollards.
9. Loose steel lintels.

C. Delegated-Design Submittal: For [**ladders**] [**and**]alternating tread devices, including analysis data signed and sealed by the qualified professional engineer responsible for their preparation.

1.5 INFORMATIONAL SUBMITTALS

A. Qualification Data: For professional engineer's experience with providing delegated-design engineering services of the kind indicated, including documentation that engineer is licensed in the jurisdiction in which Project is located.

B. Mill Certificates: Signed by stainless steel manufacturers, certifying that products furnished comply with requirements.

C. Welding certificates.

D. Paint Compatibility Certificates: From manufacturers of topcoats applied over shop primers, certifying that shop primers are compatible with topcoats.

E. Research Reports: For post-installed anchors.

1.6 QUALITY ASSURANCE

A. Welding Qualifications: Qualify procedures and personnel in accordance with the following:

1. AWS D1.1/D1.1M, "Structural Welding Code - Steel."
2. AWS D1.2/D1.2M, "Structural Welding Code - Aluminum."
3. AWS D1.6/D1.6M, "Structural Welding Code - Stainless Steel."

1.7 FIELD CONDITIONS

A. Field Measurements: Verify actual locations of walls, floor slabs, decks, and other construction contiguous with metal fabrications by field measurements before fabrication.

PART 2 - PRODUCTS

2.1 PERFORMANCE REQUIREMENTS

A. Delegated Design: Engage a qualified professional engineer, as defined in Section 01 4000 "Quality Requirements," to design ladders and alternating tread devices.

B. Structural Performance of Aluminum Ladders: Ladders [**, including landings,**] shall withstand the effects of loads and stresses within limits and under conditions specified in ANSI A14.3.

C. Structural Performance of Alternating Tread Devices: Alternating tread devices shall withstand the effects of gravity loads and the following loads and stresses within limits and under conditions indicated:

1. Uniform Load: 100 lbf/sq. ft. (4.79 kN/sq. m).
2. Concentrated Load: 300 lbf (1.33 kN) applied on an area of 4 sq. in. (2580 sq. mm).
3. Uniform and concentrated loads need not be assumed to act concurrently.
4. Alternating Tread Device Framing: Capable of withstanding stresses resulting from railing loads in addition to loads specified above.
5. Comply with applicable railing loadings in Section 05 5213 "Pipe and Tube Railings."

D. Thermal Movements: Allow for thermal movements from ambient and surface temperature changes acting on exterior metal fabrications by preventing buckling, opening of joints, overstressing of components, failure of connections, and other detrimental effects.

1. Temperature Change: 120 deg F (67 deg C), ambient; 180 deg F (100 deg C), material surfaces.

2.2 METALS

A. Metal Surfaces, General: Provide materials with smooth, flat surfaces unless otherwise indicated. For metal fabrications exposed to view in the completed Work, provide materials without seam marks, roller marks, rolled trade names, or blemishes.

B. Steel Plates, Shapes, and Bars: ASTM A36/A36M.

C. Stainless Steel Sheet, Strip, and Plate: ASTM A240/A240M or ASTM A666, Type 304.

D. Stainless Steel Bars and Shapes: ASTM A276/A276M, [**Type 304**] .

E. Rolled-Steel Floor Plate: ASTM A786/A786M, rolled from plate complying with ASTM A36/A36M or ASTM A283/A283M, Grade C or D.

F. Rolled-Stainless Steel Floor Plate: ASTM A793.

G. Steel Tubing: ASTM A500/A500M, cold-formed steel tubing.

H. Steel Pipe: ASTM A53/A53M, Standard Weight (Schedule 40) unless otherwise indicated.

I. Aluminum Plate and Sheet: ASTM B209 (ASTM B209M), Alloy 6061-T6.

J. Aluminum Extrusions: ASTM B221 (ASTM B221M), Alloy 6063-T6.

K. Aluminum-Alloy Rolled Tread Plate: ASTM B632/B632M, Alloy 6061-T6.

L. Aluminum Castings: ASTM B26/B26M, Alloy 443.0-F.

2.3 FASTENERS

A. General: Unless otherwise indicated, provide [**Type 304**] stainless steel fasteners for exterior use and zinc-plated fasteners with coating complying with ASTM B633 or ASTM F1941/F1941M, Class Fe/Zn 5, at exterior walls. Select fasteners for type, grade, and class required.

1. Provide stainless steel fasteners for fastening [**aluminum**]or[**stainless steel**] .
2. Provide bronze fasteners for fastening bronze.

B. Steel Bolts and Nuts: Regular hexagon-head bolts, ASTM A307, Grade A (ASTM F568M, Property Class 4.6); with hex nuts, ASTM A563 (ASTM A563M); and, where indicated, flat washers.

C. High-Strength Bolts, Nuts, and Washers: ASTM F3125/F3125M, Grade A325 (Grade A325M), Type 3, heavy-hex steel structural bolts; ASTM A563, Grade DH3, (ASTM A563M, Class 10S3) heavy-hex carbon-steel nuts; and where indicated, flat washers.

D. Stainless Steel Bolts and Nuts: Regular hexagon-head annealed stainless steel bolts, ASTM F593 (ASTM F738M); with hex nuts, ASTM F594 (ASTM F836M); and, where indicated, flat washers; Alloy Group 1 (A1).

E. Anchor Bolts: ASTM F1554, Grade 36, of dimensions indicated; with nuts, ASTM A563 (ASTM A563M); and, where indicated, flat washers.

1. Hot-dip galvanize or provide mechanically deposited, zinc coating where item being fastened is indicated to be galvanized.

F. Anchors, General: Capable of sustaining, without failure, a load equal to six times the load imposed when installed in unit masonry and four times the load imposed when installed in

concrete, as determined by testing in accordance with ASTM E488/E488M, conducted by a qualified independent testing agency.

G. Cast-in-Place Anchors in Concrete: Either threaded or wedge type unless otherwise indicated; galvanized ferrous castings, either ASTM A47/A47M malleable iron or ASTM A27/A27M cast steel. Provide bolts, washers, and shims as needed, all hot-dip galvanized per ASTM F2329/F2329M.

H. Post-Installed Anchors: [**Torque-controlled expansion anchors**] [**or**] [**chemical anchors**].

1. Material for Interior Locations: Carbon-steel components zinc plated to comply with ASTM B633 or ASTM F1941/F1941M, Class Fe/Zn 5, unless otherwise indicated.
2. Material for Exterior Locations and Where Stainless Steel Is Indicated: Alloy [**Group 1**] stainless steel bolts, ASTM F593 (ASTM F738M), and nuts, ASTM F594 (ASTM F836M).

I. Slotted-Channel Inserts: Cold-formed, hot-dip galvanized-steel box channels (struts) complying with MFMA-4, 1-5/8 by 7/8 inches by length indicated with anchor straps or studs not less than 3 inches long at not more than 8 inches o.c. Provide with temporary filler and tee-head bolts, complete with washers and nuts, all zinc-plated to comply with ASTM B633, Class Fe/Zn 5, as needed for fastening to inserts.

2.4 MISCELLANEOUS MATERIALS

A. Shop Primers: Provide primers that comply with [**Section 09 9113 "Exterior Painting," Section 09 9123 "Interior Painting," and Section 09 9600 "High-Performance Coatings."**]

B. Universal Shop Primer: Fast-curing, lead- and chromate-free, universal modified-alkyd primer complying with MPI#79 and compatible with topcoat.

1. Use primer containing pigments that make it easily distinguishable from zinc-rich primer.

C. Water-Based Primer: Emulsion type, anticorrosive primer for mildly corrosive environments that is resistant to flash rusting when applied to cleaned steel, complying with MPI#107 and compatible with topcoat.

D. Epoxy Zinc-Rich Primer: Complying with MPI#20 and compatible with topcoat.

E. Shop Primer for Galvanized Steel: Primer formulated for exterior use over zinc-coated metal and compatible with finish paint systems indicated.

F. Galvanizing Repair Paint: High-zinc-dust-content paint complying with SSPC-Paint 20 and compatible with paints specified to be used over it.

G. Bituminous Paint: Cold-applied asphalt emulsion complying with ASTM D1187/D1187M.

H. Shrinkage-Resistant Grout: Factory-packaged, nonmetallic, nonstaining, noncorrosive, nongaseous grout complying with ASTM C1107/C1107M. Provide grout specifically recommended by manufacturer for interior and exterior applications.

I. Concrete: Comply with requirements in Section 03 3000 "Cast-in-Place Concrete" for normal-weight, air-entrained concrete with a minimum 28-day compressive strength of 3000 psi.

2.5 FABRICATION, GENERAL

A. Shop Assembly: Preassemble items in the shop to greatest extent possible. Disassemble units only as necessary for shipping and handling limitations. Use connections that maintain structural value of joined pieces. Clearly mark units for reassembly and coordinated installation.

B. Cut, drill, and punch metals cleanly and accurately. Remove burrs and ease edges to a radius of approximately 1/32 inch unless otherwise indicated. Remove sharp or rough areas on exposed surfaces.

C. Form bent-metal corners to smallest radius possible without causing grain separation or otherwise impairing work.

D. Form exposed work with accurate angles and surfaces and straight edges.

E. Weld corners and seams continuously to comply with the following:

1. Use materials and methods that minimize distortion and develop strength and corrosion resistance of base metals.
2. Obtain fusion without undercut or overlap.
3. Remove welding flux immediately.
4. At exposed connections, finish exposed welds and surfaces smooth and blended so no roughness shows after finishing [**and contour of welded surface matches that of adjacent surface**].

F. Form exposed connections with hairline joints, flush and smooth, using concealed fasteners or welds where possible. Where exposed fasteners are required, use Phillips flat-head (countersunk) fasteners unless otherwise indicated. Locate joints where least conspicuous.

G. Fabricate seams and other connections that are exposed to weather in a manner to exclude water. Provide weep holes where water may accumulate.

H. Cut, reinforce, drill, and tap metal fabrications as indicated to receive finish hardware, screws, and similar items.

I. Provide for anchorage of type indicated; coordinate with supporting structure. Space anchoring devices to secure metal fabrications rigidly in place and to support indicated loads.

J. Where units are indicated to be cast into concrete or built into masonry, equip with integrally welded steel strap anchors, 1/8 by 1-1/2 inches (3.2 by 38 mm), with a minimum 6-inch (150-mm) embedment and 2-inch (50-mm) hook, not less than 8 inches (200 mm) from ends and corners of units and 24 inches (600 mm) o.c., unless otherwise indicated.

2.6 SHELF ANGLES

A. Fabricate shelf angles from steel angles of sizes indicated and for attachment to concrete framing. Provide horizontally slotted holes to receive 3/4-inch bolts, spaced not more than 6 inches from ends and 24 inches o.c., unless otherwise indicated.

1. Provide mitered and welded units at corners.
2. Provide open joints in shelf angles at expansion and control joints. Make open joint approximately 2 inches larger than expansion or control joint.

B. For cavity walls, provide vertical channel brackets to support angles from backup masonry and concrete.

C. Galvanize shelf angles located in exterior walls.

D. Furnish wedge-type concrete inserts, complete with fasteners, to attach shelf angles to cast-in-place concrete.

2.7 METAL LADDERS

A. General:

1. Comply with ANSI A14.3 [**, except for elevator pit ladders**].
2. For elevator pit ladders, comply with ASME A17.1/CSA B44.

B. Steel Ladders:

1. Space siderails [**16 inches**] apart unless otherwise indicated.
2. Siderails: Continuous, [**3/8-by-2-1/2-inch**] steel flat bars, with eased edges.
3. Rungs: [**3/4-inch- diameter**] , steel bars.
4. Fit rungs in centerline of siderails; plug-weld and grind smooth on outer rail faces.
5. Provide nonslip surfaces on top of each rung.
6. Provide nonslip surfaces on top of each rung by coating with abrasive material metallically bonded to rung.
   a. Manufacturers: Subject to compliance with requirements, available manufacturers offering products that may be incorporated into the Work include, but are not limited to the following:
      1) Harsco Industrial IKG, a division of Harsco Corporation.
      2) Ross Technology Corporation.
7. Source Limitations: Obtain nonslip surfaces from single source from single manufacturer.
8. Provide platforms as indicated fabricated from welded or pressure-locked steel bar grating, supported by steel angles. Limit openings in gratings to no more than 1/2 inch (12 mm) in least dimension.
9. Support each ladder at top and bottom and not more than 60 inches (1500 mm) o.c. with welded or bolted steel brackets.
10. Galvanize [**exterior**]ladders, including brackets.

C. Aluminum Ladders:

1. Manufacturers: Subject to compliance with requirements, available manufacturers offering products that may be incorportated into the Work include, but are not limited to the following:
   a. Fixfast USA.
   b. Halliday Products.
   c. O'Keeffe's Inc.
   d. Precision Ladders, LLC.
   e. Royalite Manufacturing, Inc.
   f. Thompson Fabricating, LLC.
2. Source Limitations: Obtain aluminum ladders from single source from single manufacturer.
3. Space siderails [**16 inches**] apart unless otherwise indicated.
4. Siderails: Continuous extruded-aluminum channels or tubes, not less than 2-1/2 inches deep, 3/4 inch wide, and 1/8 inch thick.
5. Rungs: Extruded-aluminum tubes, not less than 3/4 inch deep and not less than 1/8 inch thick, with ribbed tread surfaces.
6. Fit rungs in centerline of siderails; fasten by welding or with stainless steel fasteners or brackets and aluminum rivets.
7. Provide platforms as indicated fabricated from pressure-locked aluminum bar grating or extruded-aluminum plank grating, supported by extruded-aluminum framing. Limit openings in gratings to no more than 1/2 inch (12 mm) in least dimension.
8. Support each ladder at top and bottom and not more than 60 inches (1500 mm) o.c. with welded or bolted aluminum brackets.
9. Provide minimum 72-inch- (1830-mm-) high, hinged security door with padlock hasp at foot of ladder to prevent unauthorized ladder use.

2.8 ALTERNATING TREAD DEVICES

A. Alternating Tread Devices: Fabricate alternating tread devices of open-type construction with channel or plate stringers and pipe and tube railings unless otherwise indicated. Provide brackets and fittings for installation.

1. Manufacturers: Subject to compliance with requirements, available manufacturers offering products that may be incorporated into the Work include, but are not limited to the following:
   a. Lapeyre Stair Inc.
2. Tread depth shall be not less than 5 inches (127 mm) exclusive of nosing or less than 8-1/2 inches (216 mm) including the nosing, tread width shall be not less than 7 inches (178 mm), and riser height shall be not more than 9-1/2 inches (241 mm).
3. Tread depth shall be not less than 8-1/2 inches (216 mm) exclusive of nosing or less than 10-1/2 inches (267 mm) including the nosing, tread width shall be not less than 7 inches (178 mm), and riser height shall be not more than 8 inches (203 mm).
4. Fabricate from steel and assemble by welding or with stainless steel fasteners.
5. Comply with applicable railing requirements in Section 05 5213 "Pipe and Tube Railings."

B. Galvanize and prime exterior steel alternating tread devices, including treads, railings, brackets, and fasteners.

C. Prime exterior steel alternating tread devices, including treads, railings, brackets, and fasteners, with zinc-rich primer.

2.9 ELEVATOR PIT SUMP COVERS

A. Fabricate from [**1/8-inch**] [**rolled-steel**] floor plate with four 1-inch- diameter holes for water drainage and for lifting.

B. Fabricate from welded or pressure-locked steel bar grating. Limit openings in gratings to no more than 1/2 inch (12 mm) in least dimension.

C. Provide steel angle supports unless otherwise indicated.

2.10 METAL BOLLARDS

A. Fabricate metal bollards from [**Schedule 80 steel pipe**] .

1. Cap bollards with 1/4-inch- thick steel.
2. Where bollards are indicated to receive controls for door operators, provide cutouts for controls and holes for wire.
3. Where bollards are indicated to receive light fixtures, provide cutouts for fixtures and holes for wire.

B. Fabricate bollards with 3/8-inch- thick, [**steel**] baseplates for bolting to concrete slab. Drill baseplates at all four corners for 3/4-inch anchor bolts.

1. Where bollards are to be anchored to sloping concrete slabs, angle baseplates for plumb alignment of bollards.

C. Fabricate sleeves for bollard anchorage from steel or stainless steel [**pipe**] [**or**] [**tubing**] with 1/4-inch- thick, steel or stainless steel plate welded to bottom of sleeve. Make sleeves not less than 8 inches deep and 3/4 inch larger than OD of bollard.

D. Fabricate internal sleeves for removable bollards from Schedule 80 steel pipe or 1/4-inch (6.4-mm) wall-thickness steel tubing with an OD approximately 1/16 inch (1.5 mm) less than ID of bollards. Match drill sleeve and bollard for 3/4-inch (19-mm) steel machine bolt.

E. Prime steel bollards with [**primer specified in Section 09 9600 "High-Performance Coatings."**]

2.11 [**PIPE**] [**DOWNSPOUT**] GUARDS

A. Fabricate [**pipe**] [**downspout**] guards from 3/8-inch- thick by 12-inch- wide, steel plate, bent to fit flat against the wall or column at both ends and to fit around pipe with 2-inch clearance between pipe and pipe guard. Drill each end for two 3/4-inch anchor bolts.

B. Galvanize [**and prime**] steel [**pipe**] [**downspout**] guards.

C. Prime steel [**pipe**] [**downspout**] guards with [**primer specified in Section 09 9600 "High-Performance Coatings."**]

2.12 METAL DOWNSPOUT BOOTS

A. Manufacturers: Subject to compliance with requirements, available manufacturers offering products that may be incorporated into the Work include, but are not limited to the following:

1. J.R. Hoe & Sons Inc.

B. Source Limitations: Obtain downspout boots from single source from single manufacturer.

C. Provide downspout boots made from cast iron in heights indicated with inlets of size and shape to suit downspouts. Provide units with flanges and holes for countersunk anchor bolts.

1. Outlet: Vertical, to discharge into pipe.

D. Prime cast-iron downspout boots with primer specified in Section 09 9600 "High-Performance Coatings."

2.13 LOOSE BEARING AND LEVELING PLATES

A. Provide loose bearing and leveling plates for steel items bearing on masonry or concrete construction. Drill plates to receive anchor bolts and for grouting.

B. Galvanize bearing and leveling plates.

C. Prime plates with [**primer specified in Section 09 9600 "High-Performance Coatings."**]

2.14 LOOSE STEEL LINTELS

A. Fabricate loose steel lintels from steel angles and shapes of size indicated for openings and recesses in masonry walls and partitions at locations indicated. Fabricate in single lengths for each opening unless otherwise indicated. Weld adjoining members together to form a single unit where indicated.

B. Size loose lintels to provide bearing length at each side of openings equal to 1/12 of clear span, but not less than 8 inches (200 mm) unless otherwise indicated.

C. Galvanize [**and prime**] loose steel lintels located in exterior walls.

D. Prime loose steel lintels located in exterior walls with [**zinc-rich primer.**]

2.15 STEEL WELD PLATES AND ANGLES

A. Provide steel weld plates and angles not specified in other Sections, for items supported from concrete construction as needed to complete the Work. Provide each unit with no fewer than two integrally welded steel strap anchors for embedding in concrete.

2.16 GENERAL FINISH REQUIREMENTS

A. Finish metal fabrications after assembly.

B. Finish exposed surfaces to remove tool and die marks and stretch lines, and to blend into surrounding surface.

2.17 STEEL AND IRON FINISHES

A. Galvanizing: Hot-dip galvanize items as indicated to comply with ASTM A153/A153M for steel and iron hardware and with ASTM A123/A123M for other steel and iron products.

1. Do not quench or apply post galvanizing treatments that might interfere with paint adhesion.

B. Shop prime iron and steel items not indicated to be galvanized unless they are to be embedded in concrete, sprayed-on fireproofing, or masonry, or unless otherwise indicated.

1. Shop prime with universal shop primer unless primers specified in Section 09 9600 "High-Performance Coatings" are indicated.

C. Preparation for Shop Priming: Prepare surfaces to comply with requirements indicated below:

1. Exterior Items: SSPC-SP 6/NACE No. 3, "Commercial Blast Cleaning."
2. Items Indicated to Receive Zinc-Rich Primer: SSPC-SP 6/NACE No. 3, "Commercial Blast Cleaning."
3. Items Indicated to Receive Primers Specified in Section 09 9600 "High-Performance Coatings": SSPC-SP 6/NACE No. 3, "Commercial Blast Cleaning."
4. Other Steel Items: SSPC-SP 3, "Power Tool Cleaning."
5. Galvanized-Steel Items: SSPC-SP 16, "Brush-off Blast Cleaning of Coated and Uncoated Galvanized Steel, Stainless Steels, and Non-Ferrous Metals."

D. Shop Priming: Apply shop primer to comply with SSPC-PA 1, "Paint Application Specification No. 1: Shop, Field, and Maintenance Painting of Steel," for shop painting.

E. Stripe paint corners, crevices, bolts, welds, and sharp edges.

2.18 ALUMINUM FINISHES

A. As-Fabricated Finish: AA-M12.

B. Clear Anodic Finish: AAMA 611, Class I, AA-M12C22A41.

PART 3 - EXECUTION

3.1 INSTALLATION, GENERAL

A. Cutting, Fitting, and Placement: Perform cutting, drilling, and fitting required for installing metal fabrications. Set metal fabrications accurately in location, alignment, and elevation; with edges and surfaces level, plumb, true, and free of rack; and measured from established lines and levels.

B. Fit exposed connections accurately together to form hairline joints. Weld connections that are not to be left as exposed joints but cannot be shop welded because of shipping size limitations. Do not weld, cut, or abrade surfaces of exterior units that have been hot-dip galvanized after fabrication and are for bolted or screwed field connections.

C. Field Welding: Comply with the following requirements:

1. Use materials and methods that minimize distortion and develop strength and corrosion resistance of base metals.
2. Obtain fusion without undercut or overlap.
3. Remove welding flux immediately.
4. At exposed connections, finish exposed welds and surfaces smooth and blended so no roughness shows after finishing and contour of welded surface matches that of adjacent surface.

D. Fastening to In-Place Construction: Provide anchorage devices and fasteners where metal fabrications are required to be fastened to in-place construction. Provide threaded fasteners for use with concrete and masonry inserts, toggle bolts, through bolts, lag screws, wood screws, and other connectors.

E. Provide temporary bracing or anchors in formwork for items that are to be built into concrete, masonry, or similar construction.

F. Corrosion Protection: Coat concealed surfaces of aluminum that come into contact with grout, concrete, masonry, wood, or dissimilar metals with the following:

1. Cast Aluminum: Heavy coat of bituminous paint.
2. Extruded Aluminum: Two coats of clear lacquer.

3.2 INSTALLATION OF METAL BOLLARDS

A. Fill metal-capped bollards solidly with concrete and allow concrete to cure seven days before installing.

1. Do not fill removable bollards with concrete.

B. Anchor bollards to existing construction with [**expansion anchors**] . Provide four 3/4-inch bolts at each bollard unless otherwise indicated.

1. Embed anchor bolts at least 4 inches in concrete.

C. Anchor bollards in concrete [**with pipe sleeves preset and anchored into concrete**] . Fill annular space around bollard solidly with shrinkage-resistant grout; mixed and placed to comply with grout manufacturer's written instructions. Slope grout up approximately 1/8 inch toward bollard.

D. Anchor bollards in place with concrete footings. Center and align bollards in holes 3 inches above bottom of excavation. Place concrete and vibrate or tamp for consolidation. Support and brace bollards in position until concrete has cured.

E. Anchor internal sleeves for removable bollards in concrete by inserting in pipe sleeves preset into concrete. Fill annular space around internal sleeves solidly with shrinkage-resistant grout; mixed and placed to comply with grout manufacturer's written instructions. Slope grout up approximately 1/8 inch (3 mm) toward internal sleeve.

F. Anchor internal sleeves for removable bollards in place with concrete footings. Center and align sleeves in holes 3 inches (75 mm) above bottom of excavation. Place concrete and vibrate or tamp for consolidation. Support and brace sleeves in position until concrete has cured.

G. Place removable bollards over internal sleeves and secure with 3/4-inch (19-mm) machine bolts and nuts. After tightening nuts, drill holes in bolts for inserting padlocks. Owner furnishes padlocks.

H. Fill bollards solidly with concrete, mounding top surface to shed water.

1. Do not fill removable bollards with concrete.

3.3 INSTALLATION OF PIPE GUARDS

A. Provide pipe guards at exposed vertical pipes in at locations indicated on Drawings where not protected by curbs or other barriers. Install by bolting to wall or column with expansion anchors. Provide four 3/4-inch (19-mm) bolts at each pipe guard. Mount pipe guards with top edge 26 inches (660 mm) above driving surface.

3.4 INSTALLATION OF BEARING AND LEVELING PLATES

A. Clean concrete and masonry bearing surfaces of bond-reducing materials, and roughen to improve bond to surfaces. Clean bottom surface of plates.

B. Set bearing and leveling plates on wedges, shims, or leveling nuts. After bearing members have been positioned and plumbed, tighten anchor bolts. Do not remove wedges or shims but, if protruding, cut off flush with edge of bearing plate before packing with shrinkage-resistant grout. Pack grout solidly between bearing surfaces and plates to ensure that no voids remain.

3.5 REPAIRS

A. Touchup Painting:

1. Immediately after erection, clean field welds, bolted connections, and abraded areas. Paint uncoated and abraded areas with same material as used for shop painting to comply with SSPC-PA 1 for touching up shop-painted surfaces.

a. Apply by brush or spray to provide a minimum 2.0-mil (0.05-mm) dry film thickness.

2. Cleaning and touchup painting of field welds, bolted connections, and abraded areas of shop paint are specified in Section 09 9113 "Exterior Painting."

B. Galvanized Surfaces: Clean field welds, bolted connections, and abraded areas and repair galvanizing to comply with ASTM A780/A780M.

END OF SECTION 05 5000

SECTION 05 5113 - METAL PAN STAIRS

PART 1 - GENERAL

1.1 SUMMARY

A. Section Includes:

1. Preassembled steel stairs with concrete-filled and/ or precast concrete treads.
2. Steel tube railings and guards attached to metal stairs.
3. Steel tube handrails attached to walls adjacent to metal stairs.

1.2 ACTION SUBMITTALS

A. Product Data: For metal pan stairs.

B. Shop Drawings:

1. Include plans, elevations, sections, details, and attachments to other work.

C. Delegated-Design Submittal: For stairs and railings , including analysis data signed and sealed by the qualified professional engineer responsible for their preparation.

PART 2 - PRODUCTS

2.1 PERFORMANCE REQUIREMENTS

A. Delegated Design: Engage a qualified professional engineer, as defined in Section 01 4000 "Quality Requirements," to design stairs and railings.

B. Structural Performance of Stairs: Metal stairs shall withstand the effects of gravity loads and the following loads and stresses within limits and under conditions indicated:

1. Uniform Load: 100 lbf/sq. ft..
2. Concentrated Load: 300 lbf applied on an area of 4 sq. in..
3. Uniform and concentrated loads need not be assumed to act concurrently.
4. Stair Framing: Capable of withstanding stresses resulting from railing and guard loads in addition to loads specified above.

C. Structural Performance of Railings and Guards: Railings and guards, including attachment to building construction, shall withstand the effects of gravity loads and the following loads and stresses within limits and under conditions indicated:

1. Handrails and Top Rails of Guards:
   a. Uniform load of 50 lbf/ft. applied in any direction.
   b. Concentrated load of 200 lbf applied in any direction.

c. Uniform and concentrated loads need not be assumed to act concurrently.

2. Infill of Guards:

a. Concentrated load of 50 lbf applied horizontally on an area of 1 sq. ft..

b. Infill load and other loads need not be assumed to act concurrently.

2.2 METALS

A. Metal Surfaces, General: Provide materials with smooth, flat surfaces unless otherwise indicated. For components exposed to view in the completed Work, provide materials without seam marks, roller marks, rolled trade names, or blemishes.

B. Steel Plates, Shapes, and Bars: ASTM A36/A36M.

C. Steel Tubing for Railings and Guards: [**ASTM A500/A500M (cold formed)**] [**or**] [**ASTM A513/A513M**].

2.3 FASTENERS

A. Provide zinc-plated fasteners with coating complying with ASTM B 633 or ASTM F 1941 (ASTM F 1941M), Class Fe/Zn 12 for exterior use, and Class Fe/Zn 5 where built into exterior walls. Select fasteners for type, grade, and class required.

2.4 MISCELLANEOUS MATERIALS

A. Universal Shop Primer: Fast-curing, lead- and chromate-free, universal modified-alkyd primer complying with MPI#79 and compatible with topcoat.

B. Bituminous Paint: Cold-applied asphalt emulsion complying with ASTM D1187/D1187M.

C. Concrete Materials and Properties: Comply with requirements in Section 03 3000 "Cast-in-Place Concrete" for normal-weight, air-entrained, ready-mix concrete with a minimum 28-day compressive strength of 3000 psi (20 MPa) unless otherwise indicated.

D. Welded Wire Reinforcement: ASTM A 185/A 185M, 6 by 6 inches (152 by 152 mm), W1.4 by W1.4, unless otherwise indicated.

2.5 PRECAST CONCRETE TREADS

A. Concrete Materials and Properties: Comply with requirements in Section 03 3000 "Cast-in-Place Concrete" for normal-weight, ready-mixed concrete with a minimum 28-day compressive strength of 5000 psi and a total air content of not less than 4 percent or more than 6 percent.

B. Reinforcement: Galvanized, welded-wire reinforcement, 2 by 2 inches by 0.062-inch- diameter steel wire; comply with ASTM A1064/A1064M, except for minimum wire size.

2.6 FABRICATION, GENERAL

A. Provide complete stair assemblies, including metal framing, hangers, struts, railings, and guards, clips, brackets, bearing plates, and other components necessary to support and anchor stairs and platforms on supporting structure.

1. Join components by welding unless otherwise indicated.
2. Use connections that maintain structural value of joined pieces.

B. Preassemble stairs in shop to greatest extent possible.

1. Disassemble units only as necessary for shipping and handling limitations.
2. Clearly mark units for reassembly and coordinated installation.

C. Cut, drill, and punch metals cleanly and accurately.

1. Remove burrs and ease edges to a radius of approximately 1/32 inch unless otherwise indicated.
2. Remove sharp or rough areas on exposed surfaces.

D. Form bent-metal corners to smallest radius possible without causing grain separation or otherwise impairing work.

E. Weld connections to comply with the following:

1. Use materials and methods that minimize distortion and develop strength and corrosion resistance of base metals.
2. Obtain fusion without undercut or overlap.
3. Remove welding flux immediately.
4. Weld exposed corners and seams continuously unless otherwise indicated.
5. At exposed connections, finish exposed welds to comply with NOMMA's "Voluntary Joint Finish Standards" for Type 3 welds: partially dressed weld with spatter removed .

F. Form exposed connections with hairline joints, flush and smooth, using concealed fasteners where possible.

1. Locate joints where least conspicuous.

2.7 STAIR RAILINGS

A. Steel Tube Railings: Fabricate railings to comply with requirements indicated for design, dimensions, details, finish, and member sizes, including wall thickness of tube, post spacings, and anchorage, but not less than that needed to withstand indicated loads.

1. Rails and Posts: [1-1/2-inch- (38-mm-) square top and bottom rails and 1-1/2-inch- (38-mm-) square posts.
2. Picket Infill: 1/2-inch- (13-mm-) [square]pickets spaced less than 4 inches (100 mm) clear.

B. Welded Connections: Fabricate railings with welded connections. Cope components at connections to provide close fit, or use fittings designed for this purpose. Weld all around at connections, including at fittings.

1. Finish welds to comply with NOMMA's "Voluntary Joint Finish Standards" for Type 1 welds: no evidence of a welded joint as shown in NAAMM AMP 521.

C. Form changes in direction of railings by bending or by inserting prefabricated elbow fittings.

D. For changes in direction made by bending, use jigs to produce uniform curvature for each repetitive configuration required. Maintain cross section of member throughout entire bend without buckling, twisting, cracking, or otherwise deforming exposed surfaces of components.

E. Close exposed ends of railing members with prefabricated end fittings.

F. Provide wall returns at ends of wall-mounted handrails.

G. Connect posts to stair framing by direct welding.

H. Brackets, Flanges, Fittings, and Anchors: Provide wall brackets, end closures, flanges, miscellaneous fittings, and anchors for interconnecting components and for attaching to other work.

I. Fillers: Provide fillers made from steel plate, or other suitably crush-resistant material, where needed to transfer wall bracket loads through wall finishes to structural supports. Size fillers to suit wall finish thicknesses.

2.8 FINISHES

A. Finish metal stairs after assembly.

B. Preparation for Shop Priming: Prepare uncoated, ferrous-metal surfaces to comply with SSPC-SP 3, "Power Tool Cleaning."

C. Apply shop primer to uncoated surfaces of metal stair components, except those with galvanized finishes and those to be embedded in concrete or masonry unless otherwise indicated. Comply with SSPC-PA 1, "Paint Application Specification No. 1: Shop, Field, and Maintenance Painting of Steel," for shop painting.

PART 3 - EXECUTION

3.1 INSTALLATION OF METAL PAN STAIRS

A. Cutting, Fitting, and Placement: Perform cutting, drilling, and fitting required for installing metal stairs. Set units accurately in location, alignment, and elevation, measured from established lines and levels and free of rack.

B. Install metal stairs by welding stair framing to steel structure or to weld plates cast into concrete unless otherwise indicated.

C. Fit exposed connections accurately together to form hairline joints. Weld connections that are not to be left as exposed joints.

D. Field Welding: Comply with requirements for welding in "Fabrication, General" Article.

E. Place and finish concrete fill for treads and platforms to comply with Section 03 3000 "Cast-in-Place Concrete."

1. Install abrasive nosings with anchors fully embedded in concrete.

F. Install precast concrete treads with adhesive supplied by manufacturer.

3.2 INSTALLATION OF RAILINGS AND GUARDS

A. Adjust railing systems before anchoring to ensure matching alignment at abutting joints. Space posts at spacing indicated or, if not indicated, as required by design loads. Plumb posts in each direction. Secure posts and rail ends to building construction as follows:

1. Anchor posts to steel by welding or bolting to steel supporting members.
2. Anchor handrail ends to concrete and masonry with steel round flanges welded to rail ends and anchored with postinstalled anchors and bolts.

B. Attach handrails to wall with wall brackets. Locate brackets as indicated or, if not indicated, at spacing required to support structural loads. Secure wall brackets to building construction as required to comply with performance requirements.

3.3 ADJUSTING AND CLEANING

A. Touchup Painting: Immediately after erection, clean field welds, bolted connections, and abraded areas of shop paint, and paint exposed areas with same material as used for shop painting to comply with SSPC-PA 1 for touching up shop-painted surfaces.

END OF SECTION 05 5113

SECTION 05 5213 - PIPE AND TUBE RAILINGS

PART 1 - GENERAL

1.1 SUMMARY

A. Section Includes:

1. Aluminum railings and guardrail systems.
2. Steel pipe and tube handrail systems.

B. Related Requirements:

1. Section 05 5112 "Metal Pan Stairs" for steel tube railings associated with metal pan stairs.

1.2 ACTION SUBMITTALS

A. Product Data:

1. Manufacturer's product lines of mechanically connected railings.
2. Railing brackets.
3. Grout
4. Anchoring cement.
5. Paint products.

B. Shop Drawings: Include plans, elevations, sections, details, and attachments to other work.

C. Samples: For each type of exposed finish.

D. Delegated-Design Submittal: For railings, including analysis data signed and sealed by the qualified professional engineer responsible for their preparation.

1.3 INFORMATIONAL SUBMITTALS

A. Product Test Reports: For pipe and tube railings, for tests performed by a qualified testing agency, according to ASTM E 894 and ASTM E 935.

PART 2 - PRODUCTS

2.1 MANUFACTURERS

A. Steel Pipe and Tube Railings:

1. Manufacturers: Subject to compliance with requirements, available manufacturers offering products that may be incorporated into the Work include, but are not limited to, the following:
2. Basis-of-Design Product: Subject to compliance with requirements, provide product indicated on Drawings or comparable product by one of the following:
   a. Wagner, R & B, Inc.

B. Aluminum Pipe and Tube Railings:

1. Basis-of-Design Product: Subject to compliance with requirements, provide [product indicated on Drawings or comparable product by one of the following:
   a. ATR Technologies, Inc.
   b. Blum, Julius & Co., Inc.
   c. Braun, J. G., Company.
   d. CraneVeyor Corp.
   e. Hollaender Manufacturing Company.
   f. Kee Industrial Products, Inc.
   g. Moultrie Manufacturing Company.
   h. Sterling Dula Architectural Products, Inc; Div. of Kane Manufacturing..
   i. Superior Aluminum Products, Inc.
   j. Thompson Fabricating, LLC.
   k. Tri Tech, Inc.
   l. Tubular Specialties Manufacturing, Inc.
   m. Tuttle Railing Systems.
   n. Wagner, R & B, Inc.

2.2 PERFORMANCE REQUIREMENTS

A. Delegated Design: Engage a qualified professional engineer, as defined in Section 01 4000 "Quality Requirements," to design railings, including attachment to building construction.

B. Structural Performance: Railings, including attachment to building construction, shall withstand the effects of gravity loads and the following loads and stresses within limits and under conditions indicated:

1. Handrails and Top Rails of Guards:
   a. Uniform load of 50 lbf/ ft. (0.73 kN/m) applied in any direction.
   b. Concentrated load of 200 lbf (0.89 kN) applied in any direction.
   c. Uniform and concentrated loads need not be assumed to act concurrently.
2. Infill of Guards:
   a. Concentrated load of 50 lbf (0.22 kN) applied horizontally on an area of 1 sq. ft. (0.093 sq. m).
   b. Infill load and other loads need not be assumed to act concurrently.

2.3 METALS, GENERAL

A. Brackets, Flanges, and Anchors: Cast or formed metal of same type of material and finish as supported rails unless otherwise indicated.

1. Provide type of bracket with [**flange tapped for concealed anchorage to threaded hanger bolt**]orpredrilled hole for exposed bolt anchorage and that provides 1-1/2-inch clearance from inside face of handrail to finished wall surface.

2.4 STEEL AND IRON

A. Tubing: ASTM A 500 (cold formed)

B. Pipe: ASTM A 53/A 53M, Type F or Type S, Grade A, Standard Weight (Schedule 40), unless another grade and weight are required by structural loads.

1. Provide galvanized finish for exterior installations and where indicated.

C. Plates, Shapes, and Bars: ASTM A 36/A 36M.

D. Cast Iron: Either gray iron, ASTM A 48/A 48M, or malleable iron, ASTM A 47/A 47M, unless otherwise indicated.

E. Expanded Metal: ASTM F 1267, Type I (expanded) , Class 1 (uncoated).

1. Style Designation: 1-1/2 number 10.

2.5 ALUMINUM

A. Aluminum, General: Provide alloy and temper recommended by aluminum producer and finisher for type of use and finish indicated, and with not less than the strength and durability properties of alloy and temper designated below for each aluminum form required.

B. Extruded [**Bars**] [**and**] [**Tubing**]: ASTM B221, Alloy 6063-T5/T52.

C. Extruded Structural [**Pipe**] [**and**] [**Round Tubing**]: ASTM B429/B429M, Alloy 6063-T6.

D. Drawn Seamless Tubing: ASTM B210/B210M, Alloy 6063-T832.

E. Plate and Sheet: ASTM B209, Alloy 6061-T6.

2.6 FASTENERS

A. General: Provide the following:

1. Ungalvanized-Steel Railings: Plated steel fasteners complying with ASTM B 633 or ASTM F 1941 (ASTM F 1941M), Class Fe/Zn 5 for zinc coating.
2. Hot-Dip Galvanized Railings: Type 304 stainless-steel or hot-dip zinc-coated steel fasteners complying with ASTM A 153/A 153M or ASTM F 2329 for zinc coating.
3. Aluminum Railings: Type 304 stainless-steel fasteners.
4. Stainless-Steel Railings: Type 304stainless-steel fasteners.

B. Post-Installed Anchors: Torque-controlled expansion anchors or chemical anchors capable of sustaining, without failure, a load equal to 6 times the load imposed when installed in unit

masonry and 4 times the load imposed when installed in concrete, as determined by testing according to ASTM E 488/E 488M, conducted by a qualified independent testing agency.

1. Material for Interior Locations: Carbon-steel components zinc-plated to comply with ASTM B 633 or ASTM F 1941 (ASTM F 1941M), Class Fe/Zn 5, unless otherwise indicated.
2. Material for Exterior Locations and Where Stainless Steel Is Indicated: Alloy [Group 1 (A1)] stainless-steel bolts, ASTM F 593 (ASTM F 738M), and nuts, ASTM F 594 (ASTM F 836M).

2.7 MISCELLANEOUS MATERIALS

A. Welding Rods and Bare Electrodes: Select in accordance with AWS specifications for metal alloy welded.

B. Low-Emitting Materials: Paints and coatings shall comply with the testing and product requirements of the California Department of Public Health's (formerly, the California Department of Health Services') "Standard Method for the Testing and Evaluation of Volatile Organic Chemical Emissions from Indoor Sources Using Environmental Chambers."

C. Etching Cleaner for Galvanized Metal: Complying with MPI#25.

D. Galvanizing Repair Paint: High-zinc-dust-content paint, complying with SSPC-Paint 20 and compatible with paints specified to be used over it.

E. Apply shop primer to uncoated surfaces of metal stair components, except those with galvanized finishes and those to be embedded in concrete or masonry unless otherwise indicated. Comply with SSPC-PA 1, "Paint Application Specification No. 1: Shop, Field, and Maintenance Painting of Steel," for shop painting.

2.8 FABRICATION

A. Cut, drill, and punch metals cleanly and accurately.

1. Remove burrs and ease edges to a radius of approximately 1/32 inch unless otherwise indicated.
2. Remove sharp or rough areas on exposed surfaces.

B. Form work true to line and level with accurate angles and surfaces.

C. Welded Connections: Cope components at connections to provide close fit, or use fittings designed for this purpose. Weld all around at connections, including at fittings.

1. Use materials and methods that minimize distortion and develop strength and corrosion resistance of base metals.
2. Obtain fusion without undercut or overlap.
3. Remove flux immediately.
4. At exposed connections, finish exposed surfaces smooth and blended so no roughness shows after finishing and welded surface matches contours of adjoining surfaces.

D. Welded Connections for Aluminum Pipe: Fabricate railings to interconnect members with concealed internal welds that eliminate surface grinding, using manufacturer's standard system of sleeve and socket fittings.

E. Nonwelded Connections: Connect members with concealed mechanical fasteners and fittings. Fabricate members and fittings to produce flush, smooth, rigid, hairline joints.

F. For changes in direction made by bending, use jigs to produce uniform curvature for each repetitive configuration required. Maintain cross section of member throughout entire bend without buckling, twisting, cracking, or otherwise deforming exposed surfaces of components.

G. Close exposed ends of railing members with prefabricated end fittings.

H. Provide wall returns at ends of wall-mounted handrails unless otherwise indicated .

I. Brackets, Flanges, Fittings, and Anchors: Provide wall brackets, flanges, miscellaneous fittings, and anchors to interconnect railing members to other work unless otherwise indicated.

1. At brackets and fittings fastened to plaster or gypsum board partitions, provide crush-resistant fillers or other means to transfer loads through wall finishes to structural supports and prevent bracket or fitting rotation and crushing of substrate.

2.9 ALUMINUM FINISHES

A. Color: As selected by owner

B. Touch up materials: As recommended by coating manufacturer for field application.

PART 3 - EXECUTION

3.1 EXAMINATION

A. Verify that field conditions are acceptable and are ready to receive work

3.2 INSTALLATION, GENERAL

A. Install in accordance with manufacturer's instructions

B. Install components plumb and level, accurately fitted from distortion or defects, with tight joints

C. Anchor railings securely to structure.

D. Field weld anchors as indicated on drawings. Touch-up welds with primer. Grind welds smooth.

3.3 TOLERANCES

A. Maximum Variation From Plumb: 1/4” per floor level, non cumulative.

B. Maximum Offset From True Alignment: 1/4”

C. Maximum Out of Position: 1/4”

END OF SECTION 05 5213

SECTION 05 7300 - DECORATIVE METAL RAILINGS

PART 1 - GENERAL

1.1 SUMMARY

A. Section Includes:

1. Aluminum decorative railings.
2. Copper-alloy decorative railings.
3. Stainless steel decorative railings.
4. Steel and iron decorative railings.

1.2 ACTION SUBMITTALS

A. Product Data:

1. Manufacturer's product lines of decorative metal railings assembled from standard components.
2. Stainless steel cable and cable fittings.
3. Handrail brackets.
4. Wood rails.
5. Lacquer for copper alloys.
6. Shop primer.
7. Intermediate coats and topcoats.
8. Bituminous paint.
9. Nonshrink, nonmetallic grout.
10. Anchoring cement.
11. Metal finishes.

B. Shop Drawings: Include plans, elevations, sections, and attachment details.

C. Samples: For each type of exposed finish required.

D. Delegated-Design Submittal: For railings, including analysis data signed and sealed by the qualified professional engineer responsible for their preparation.

1.3 INFORMATIONAL SUBMITTALS

A. Qualification Data: For testing agency.

B. Welding certificates.

C. Product Test Reports: For tests on railings performed by a qualified testing agency, in accordance with ASTM E894 and ASTM E935.

D. Preconstruction test reports.

1.4 QUALITY ASSURANCE

A. Welding Qualifications: Qualify procedures and personnel in accordance with the following:

1. AWS D1.1/D1.1M, "Structural Welding Code - Steel."
2. AWS D1.2/D1.2M, "Structural Welding Code - Aluminum."
3. AWS D1.6/D1.6M, "Structural Welding Code - Stainless Steel."

1.5 PRECONSTRUCTION TESTING

A. Preconstruction Testing Service: Engage a qualified testing agency to perform preconstruction testing on laboratory mockups. Payment for these services will be made by Contractor. Retesting of products that fail to meet specified requirements shall be done at Contractor's expense.

1. Build laboratory mockups at testing agency facility; use personnel, materials, and methods of construction that will be used at Project site.
2. Test railings in accordance with ASTM E894 and ASTM E935.
3. Notify Architect seven days in advance of the dates and times when laboratory mockups will be tested.

PART 2 - PRODUCTS

2.1 PERFORMANCE REQUIREMENTS

A. Delegated Design: Engage a qualified professional engineer, as defined in Section 01 4000 "Quality Requirements," to design railings, including attachment to building construction.

B. Structural Performance: Railings, including attachment to building construction, shall withstand the effects of gravity loads and the following loads and stresses within limits and under conditions indicated:

1. Handrails and Top Rails of Guards:
   a. Uniform load of 50 lbf/ft. applied in any direction.
   b. Concentrated load of 200 lbf applied in any direction.
   c. Uniform and concentrated loads need not be assumed to act concurrently.
2. Infill of Guards:
   a. Concentrated load of 50 lbf applied horizontally on an area of 1 sq. ft..
   b. Infill load and other loads need not be assumed to act concurrently.

2.2 METALS, GENERAL

A. Metal Surfaces, General: Provide materials with smooth surfaces, without seam marks, roller marks, rolled trade names, stains, discolorations, or blemishes.

B. Brackets, Flanges, and Anchors: Same metal and finish as supported rails unless otherwise indicated.

2.3 ALUMINUM DECORATIVE RAILINGS

A. <Click here to find, evaluate, and insert list of manufacturers and products.>

B. Aluminum, General: Provide alloy and temper recommended by aluminum producer and finisher for type of use and finish indicated, and with strength and durability properties for each aluminum form required not less than that of alloy and temper designated below.

C. Extruded Bars and Shapes [**, Including Extruded Tubing**]: ASTM B221, Alloy 6063-T5/T52.

D. Extruded Structural [**Pipe**] [**and**] [**Round Tubing**]: ASTM B429/B429M, Alloy 6063-T6.

1. Provide Standard Weight (Schedule 40) pipe unless otherwise indicated.

E. Drawn Seamless Tubing: ASTM B210/B210M, Alloy 6063-T832.

F. Plate and Sheet: ASTM B209, [**Alloy 5005-H32**] [**Alloy 6061-T6**].

G. Die and Hand Forgings: ASTM B247, Alloy 6061-T6.

H. Stainless Steel Cable and Cable Fittings:

1. <Click here to find, evaluate, and insert list of manufacturers and products.>
2. Cable: [**1-by-19**] [**7-by-7**] [**7-by-19**] <**Insert configuration**> wire cable made from wire complying with ASTM A492, Type 316 [**, PVC jacketed**] , <**Insert color**>.
3. Cable Diameter: [**1/8 inch**] [**5/32 inch**] [**3/16 inch**] [**1/4inch**].
4. Cable Fittings: Connectors of types indicated, fabricated from stainless steel, and with capability to sustain, without failure, a load equal to minimum breaking strength of cable with which they are used.
5. Intermediate Cable Supports: Stainless steel flat bar, 1/4 by 1 inch, predrilled.

I. Castings: ASTM B26/B26M, Alloy A356.0-T6.

J. Perforated Metal Infill Panels: Aluminum sheet, ASTM B209, Alloy 6061-T6, [**0.063 inch**] <**Insert dimension**> thick, [**with 1/4-inch holes 3/8-inch o.c. in staggered rows**] <**Insert description**>.

1. Basis-of-Design Product: Provide product with perforations matching <**Insert manufacturer's name; product name or designation**>.

K. Woven-Wire Mesh Infill Panels: Intermediate-crimp, [**diamond**] [**square**] pattern, 2-inch woven-wire mesh, made from 0.162-inch nominal diameter aluminum wire complying with ASTM B211/B211M, Alloy 6061-T94.

1. Basis-of-Design Product: Provide product with crimp pattern matching <**Insert manufacturer's name; product name or designation**>.

L. Extruded Shapes, Bronze: ASTM B455, Alloy UNS C38500 (architectural bronze).

M. Extruded Shapes, Brass: ASTM B249/B249M, Alloy UNS C36000 (free-cutting brass).

N. Extruded Shapes, Nickel Silver: ASTM B249/B249M, Alloy UNS C79600.

O. Seamless Pipe, Bronze: ASTM B43, Alloy UNS C23000 (red brass, 85 percent copper).

P. Seamless Tube, Bronze: ASTM B135/B135M, Alloy UNS C23000 (red brass, 85 percent copper).

Q. Seamless Tube, Brass: ASTM B135/B135M, Alloy UNS C26000 (cartridge brass, 70 percent copper).

R. Seamless Tube, Copper: ASTM B75/B75M, Alloy UNS C12200 (phosphorous deoxidized, high residual phosphorous copper).

S. Castings, Bronze: [**Composition bronze castings complying with ASTM B62, Alloy UNS C83600 (85-5-5-5 or No. 1 composition commercial red brass)**] [**or**] [**sand castings complying with ASTM B584, Alloy UNS C86500 (No. 1 manganese bronze)**].

T. Castings, Brass: Sand castings complying with ASTM B584, Alloy UNS C85200 (high-copper yellow brass).

U. Castings, Copper: ASTM B824, with a minimum of 99.9 percent copper.

V. Castings, Nickel Silver: ASTM B584, Alloy UNS C97300 (12 percent leaded nickel silver).

W. Plate, Sheet, Strip, and Bars; Bronze: ASTM B36/B36M, Alloy UNS C28000 (muntz metal, 60 percent copper).

X. Plate, Sheet, Strip, and Bars; Brass: ASTM B36/B36M, Alloy UNS C26000 (cartridge brass, 70 percent copper).

Y. Plate, Sheet, Strip, and Bars; Copper: ASTM B152/B152M, Alloy UNS C11000 (electrolytic tough pitch copper) or Alloy UNS C12200 (phosphorous deoxidized, high-residual phosphorous copper).

Z. Stainless Steel Cable and Cable Fittings:

1. <Click here to find, evaluate, and insert list of manufacturers and products.>
2. Cable: [**1-by-19**] [**7-by-7**] [**7-by-19**] <**Insert configuration**> wire cable made from wire complying with ASTM A492, Type 316 [**, PVC jacketed**] , <**Insert color**>.
3. Cable Diameter: [**1/8 inch**] [**5/32 inch**] [**3/16 inch**] [**1/4 inch**].
4. Cable Fittings: Connectors of types indicated, fabricated from stainless steel, and with capability to sustain, without failure, a load equal to minimum breaking strength of cable with which they are used.
5. Intermediate Cable Supports: Stainless steel flat bar, 1/4-by-1-inch, predrilled.

2.4 STAINLESS STEEL DECORATIVE RAILINGS

A. <Click here to find, evaluate, and insert list of manufacturers and products.>

B. Tubing: ASTM A554, [**Grade MT 304**] [**Grade MT 316**] [**Grade MT 316L**].

C. Pipe: ASTM A312/A312M, [**Grade TP 304**] [**Grade TP 316**] [**Grade TP 316L**].

D. Castings: ASTM A743/A743M, [**Grade CF 8 or CF 20**] [**Grade CF 8M or CF 3M**].

E. Plate, Sheet, and Strip: ASTM A240/A240M or ASTM A666, [**Type 304**] [**Type 316**] [**Type 316L**].

F. Flat Bar: ASTM A666, [**Type 304**] [**Type 316**] [**Type 316L**].

G. Bars and Shapes: ASTM A276/A276M, [**Type 304**] [**Type 316**] [**Type 316L**].

H. Illuminated [**Top**] [**Hand**] Rails: Provide internal illumination using concealed, internally wired, integrated LED [**dimmable**] lamps to illuminate walking surfaces adjacent to railings without light leaks. Make provisions for servicing and for concealed connection to electric service.

1. LED Luminaires: Comply with [**Section 26 5119 "LED Interior Lighting"**] [**Section 26 5619 LED "Exterior Lighting"**] and as follows:
   a. Lamp Type: [**Linear**] [**Point**] <**Insert lamp description**>.
   b. Light Illumination: White, [**standard**] [**high**] output; [**80 lumens/300 mm**] [**120 lumens/300 mm**] [**270 lumens/300 mm**] <**Insert value**>.
   c. Efficacy: Minimum [**80**] <**Insert number**> lm/W.
   d. Color Rendering Index: Minimum [**65**] [**70**] [**80**] <**Insert number**>.
   e. Correlated Color Temperature: [**2700 K**] [**3000 K**] [**3500 K**] <**Insert value**>.
   f. Rated Lamp Life: [**50,000**] <**Insert number**> hours at 70 percent lamp illumination output.
   g. Beam Distribution: [**Symmetric**] [**Asymmetric**] [**10 degrees**] [**25 degrees**] [**55 degrees**] [**100 degrees**] <**Insert angle or angle range**>.
   h. LED Diffuser: UV-stabilized acrylic, [**clear**] [**translucent**], matching rail profile.
   i. Nominal Operating Voltage: [**120 V ac**] [**277 V ac**] input; [**12 V dc**] [**24 V dc**] output.
   j. Internal Driver: [**100**] [**120**] W.
   k. UL Listing: [**Damp**] [**Dry**].
   l. IP Rating: IP67.
   m. Electrical Components, Devices, and Accessories: Listed and labeled as defined in NFPA 70, by a qualified testing agency, and marked for intended location and application.

I. Stainless Steel Cable and Cable Fittings:

1. <Click here to find, evaluate, and insert list of manufacturers and products.>
2. Cable: [**1-by-19**] [**7-by-7**] [**7-by-19**] <**Insert configuration**> wire cable made from wire complying with ASTM A492, Type 316 [**, PVC jacketed**] , <**Insert color**>.
3. Cable Diameter: [**1/8 inch**] [**5/32 inch**] [**3/16 inch**] [**1/4 inch**].
4. Cable Fittings: Connectors of types indicated, fabricated from stainless steel, and with capability to sustain, without failure, a load equal to minimum breaking strength of cable with which they are used.
5. Intermediate Cable Supports: Stainless steel flat bar, 1/4-by-1-inch, predrilled.

J. Expanded Metal Infill Panels: ASTM F1267, [**Type I (expanded)**] [**Type II (expanded and flattened)**], Class 3 (corrosion-resisting steel), made from stainless steel sheet complying with ASTM A666, [**Type 304**] [**Type 316**].

1. Style Designation: [**3/4 number 13**] [**1-1/2 number 10**] <**Insert designation**>.

K. Perforated Metal Infill Panels: Stainless steel sheet, ASTM A240/A240M or ASTM A666, [**Type 304**] [**Type 316L**] , [**0.062 inch**] <**Insert dimension**> thick, [**with 1/4-inch holes 3/8 inch o.c. in staggered rows**] <**Insert description**>.

1. Basis-of-Design Product: Provide product with perforations matching <**Insert manufacturer's name; product name or designation**>.

L. Woven-Wire Mesh Infill Panels: Intermediate-crimp, [**diamond**] [**square**] pattern, 2-inch woven-wire mesh, made from 0.135-inch nominal diameter stainless steel wire complying with ASTM A580/A580M, [**Type 304**] [**Type 316**].

1. Basis-of-Design Product: Provide product with crimp pattern matching <**Insert manufacturer's name; product name or designation**>.

2.5 STEEL AND IRON DECORATIVE RAILINGS

A. Tubing: [**ASTM A500/A500M (cold formed)**] [**or**] [**ASTM A513/A513M, Type 5**].

B. Bars: Hot-rolled, carbon steel complying with ASTM A29/A29M, Grade 1010.

C. Plates, Shapes, and Bars: ASTM A36/A36M.

D. Cast Iron: Either gray iron, ASTM A48/A48M, or malleable iron, ASTM A47/A47M, unless otherwise indicated.

E. Stainless Steel Cable and Cable Fittings:

1. <Click here to find, evaluate, and insert list of manufacturers and products.>
2. Cable: [**1-by-19**] [**7-by-7**] [**7-by-19**] <**Insert configuration**> wire cable made from wire complying with ASTM A492, Type 316 [**, PVC jacketed**] , <**Insert color**>.
3. Cable Diameter: [**1/8 inch**] [**5/32 inch**] [**3/16 inch**] [**1/4 inch**].
4. Cable Fittings: Connectors of types indicated, fabricated from stainless steel, and with capability to sustain, without failure, a load equal to minimum breaking strength of cable with which they are used.
5. Intermediate Cable Supports: Stainless steel flat bar, 1/4-by-1-inch, predrilled.

F. Expanded Metal Infill Panels: ASTM F1267, [**Type I (expanded)**] [**Type II (expanded and flattened)**], Class 1 (uncoated).

1. Style Designation: [**3/4 number 13**] [**1-1/2 number 10**] <**Insert designation**>.

G. Perforated Metal Infill Panels:

1. Cold-Rolled Steel Sheet: ASTM A1008/A1008M, or hot-rolled steel sheet, ASTM A1011/A1011M, commercial steel Type B, [**0.060 inch**] <**Insert dimension**> thick, [**with 1/4-inch holes 3/8 inch o.c. in staggered rows**] <**Insert description**>.
   a. Basis-of-Design Product: Provide product with perforations matching <**Insert manufacturer's name; product name or designation**>.

H. Woven-Wire Mesh Infill Panels: Intermediate-crimp, [**diamond**] [**square**] pattern, 2-inch woven-wire mesh, made from 0.135-inch nominal diameter steel wire complying with ASTM A510/A510M.

1. Basis-of-Design Product: Provide product with crimp pattern matching <**Insert manufacturer's name; product name or designation**>.

2.6 FASTENERS

A. Fastener Materials:

1. Aluminum Railing Components: [**Type 304**] [**Type 316**] stainless steel fasteners.
2. Copper-Alloy (Bronze) Railing Components: Silicon bronze (Alloy 651 or Alloy 655) fasteners [**where concealed; muntz metal (Alloy 280) fasteners where exposed**].
3. Copper-Alloy (Brass) Railing Components: Silicon bronze (Alloy 651 or Alloy 655) fasteners [**where concealed; brass (Alloy 260 or Alloy 360) fasteners where exposed**].
4. Stainless Steel Railing Components: [**Type 304**] [**Type 316**] stainless steel fasteners.
5. Ungalvanized-Steel Railing Components: Plated-steel fasteners complying with ASTM F1941/F1941M, Class Fe/Zn 5 for electrodeposited zinc coating where concealed; Type 304 stainless steel fasteners where exposed.
6. Hot-Dip Galvanized-Steel Railing Components: Type 304 stainless steel or hot-dip zinc-coated steel fasteners complying with ASTM A153/A153M or ASTM F2329/F2329M for zinc coating.
7. Dissimilar Metal Railing Components: [**Type 304**] [**Type 316**] stainless steel fasteners.

B. Post-Installed Anchors: Fastener systems with working capacity greater than or equal to the design load, in accordance with an evaluation report acceptable to authorities having jurisdiction, based on ICC-ES AC193 [**or ICC-ES AC308**].

1. Material for Interior Locations: Carbon-steel components zinc plated to comply with ASTM B633 or ASTM F1941/F1941M, Class Fe/Zn 5, unless otherwise indicated.
2. Material for Exterior Locations and Where Stainless Steel Is Indicated: Alloy [**Group 1**] [**Group 2**] stainless steel bolts, ASTM F593 and nuts, ASTM F594.

2.7 MISCELLANEOUS MATERIALS

A. Handrail Brackets: [**Cast-aluminum,**] [**Cast-bronze,**] [**Cast-brass,**] [**Cast-copper,**] [**Cast-nickel-silver,**] [**Cast stainless steel,**] [**Cast-iron**] center of handrail [**2-1/2 inches**] [**3-1/8 inches**] <**Insert dimension**> from [**face of railing**] [**wall**].

B. Wood Rails:

1. Clear, straight-grained hardwood rails secured to [**recessed**] [**exposed**] metal subrail.
   a. Species: [**Ash**] [**Cherry**] [**Red oak**] [**Teak**] [**Walnut**] [**White oak**] <**Insert species**>.
   b. Finish: [**Manufacturer's standard**] [**Transparent polyurethane**] [**Penetrating oil**] [**Acrylic impregnated**].

c. Staining: [**None**] [**Match Architect's sample**] [**As selected by Architect from manufacturer's full range**] <**Insert description or manufacturer's name and product designation**>.

d. Profile: [**Square, 1-3/4 by 1-3/4 inches with edges eased to 1/4-inch radius**] [**Rectangular, 1-3/4 by 5 inches with edges eased to 1/4-inch radius**] [**Round, 2-inch diameter**] [**As indicated on Drawings**] <**Insert description**>.

2. <Click to insert sustainable design text for certified wood.>

3. Hardwood rails complying with Section 06 4023 "Interior Architectural Woodwork."

C. Welding Rods and Bare Electrodes: Select according to AWS specifications for metal alloy welded.

1. For [**aluminum**] [**and**] [**stainless steel**] railings, provide type and alloy as recommended by producer of metal to be welded and as required for color match, strength, and compatibility in fabricated items.

D. Brazing Rods: For copper-alloy railings, provide type and alloy as recommended by producer of metal to be brazed and as required for color match, strength, and compatibility in fabricated items.

E. Lacquer for Copper Alloys: Clear acrylic lacquer specially developed for coating copper-alloy products.

F. Etching Cleaner for Galvanized Metal: Complying with MPI#25.

G. Galvanizing Repair Paint: High-zinc-dust-content paint complying with SSPC-Paint 20 and compatible with paints specified to be used over it.

H. Shop Primers: Provide primers that comply with [**Section 09 9113 "Exterior Painting."**] [**Section 09 9123 "Interior Painting."**] [**Section 09 9600 "High-Performance Coatings."**]

I. Universal Shop Primer: Fast-curing, lead- and chromate-free, universal modified-alkyd primer complying with MPI#79 and compatible with topcoat.

1. Use primer containing pigments that make it easily distinguishable from zinc-rich primer.

J. Epoxy Zinc-Rich Primer: Complying with MPI#20 and compatible with topcoat.

K. Shop Primer for Galvanized Steel: [**Cementitious galvanized metal primer complying with MPI#26**] [**Vinyl wash primer complying with MPI#80**] [**Water-based galvanized metal primer complying with MPI#134**].

L. Intermediate Coats and Topcoats: Provide products that comply with [**Section 09 9113 "Exterior Painting."**] [**Section 09 9123 "Interior Painting."**] [**Section 09 9600 "High-Performance Coatings."**]

M. Epoxy Intermediate Coat: Complying with MPI#77 and compatible with primer and topcoat.

N. Polyurethane Topcoat: Complying with MPI#72 and compatible with undercoat.

O. Bituminous Paint: Cold-applied asphalt emulsion complying with ASTM D1187/D1187M.

P. Nonshrink, Nonmetallic Grout: Factory-packaged, nonstaining, noncorrosive, nongaseous grout complying with ASTM C1107/C1107M. Provide grout specifically recommended by manufacturer for interior and exterior applications.

Q. Anchoring Cement: Factory-packaged, nonshrink, nonstaining, hydraulic-controlled expansion cement formulation for mixing with water at Project site to create pourable anchoring, patching, and grouting compound.

1. Water-Resistant Product: [**At exterior locations**] [**and**] [**where indicated on Drawings**], provide formulation that is resistant to erosion from water exposure without needing protection by a sealer or waterproof coating and that is recommended by manufacturer for exterior use.

2.8 FABRICATION

A. Fabricate railings to comply with requirements indicated for design, dimensions, member sizes and spacing, details, finish, and anchorage [**, but not less than that required to support structural loads**].

B. Connections: Fabricate railings with [**welded**] [**or**] [**mechanical**] connections unless otherwise indicated.

C. Welded Connections: Cope components at connections to provide close fit, or use fittings designed for this purpose. Weld all around at connections, including at fittings.

1. At exposed connections, finish exposed welds to comply with NOMMA's "Voluntary Joint Finish Standards" for Finish #1 welds; ornamental quality with no evidence of a welded joint.

D. Welded Connections for Aluminum Pipe: Fabricate railings to interconnect members with concealed internal welds that eliminate surface grinding, using manufacturer's standard system of sleeve and socket fittings.

E. Brazed Connections: Connect copper and copper-alloy railings by brazing. Cope components at connections to provide close fit, or use fittings designed for this purpose. Braze corners and seams continuously.

1. At exposed connections, finish exposed surfaces smooth and blended, so no roughness shows after finishing and brazed surface matches contours of adjoining surfaces.

F. Mechanical Connections: Connect members with concealed mechanical fasteners and fittings.

G. Form changes in direction as follows:

1. As detailed.
2. [**By bending**] [**or**] [**by inserting prefabricated elbow fittings**].

H. Bend members in jigs to produce uniform curvature for each configuration required. Maintain cross section of member throughout entire bend without buckling, twisting, cracking, or otherwise deforming exposed surfaces of components.

I. Close exposed ends of hollow railing members with prefabricated cap and end fittings of same metal and finish as railings.

J. Provide wall returns at ends of wall-mounted handrails unless otherwise indicated. Close ends of returns, unless clearance between end of rail and wall is 1/4 inch or less.

K. Brackets, Flanges, Fittings, and Anchors: Provide wall brackets, flanges, handrail brackets, miscellaneous fittings, and anchors to interconnect railing members to other Work unless otherwise indicated.

L. Stainless Steel Cable Guard Infill: Fabricate cable guard infill assemblies in the shop to field-measured dimensions with fittings machine swaged.

1. Minimize amount of turnbuckle take-up used for dimensional adjustment, so maximum amount is available for tensioning cable.
2. Tag cable assemblies and fittings to identify installation locations and orientations for coordinated installation.

M. Expanded-Metal Infill Panels: Fabricate infill panels from [**aluminum**] [**stainless steel**] [**steel**] expanded-metal sheet [**unless otherwise indicated**].

1. Edge panels with U-shaped channels made from same metal as infill; not less than 0.043 inch thick.

N. Perforated-Metal Infill Panels: Fabricate infill panels from perforated metal made from [**aluminum**] [**stainless steel**] [**steel**] [**galvanized steel**] [**same metal as railings in which they are installed**].

1. Edge panels with U-shaped channels made from metal sheet, of same metal as perforated metal and not less than 0.043 inch thick.

O. Woven-Wire Mesh Infill Panels: Fabricate infill panels from woven-wire mesh crimped into 1-by-1/2-by-1/8-inch metal channel frames.

1. Fabricate wire mesh and frames from [**aluminum**] [**stainless steel**] [**steel**] [**unless otherwise indicated**].
2. Orient wire mesh with [**diamonds vertical**] [**wires perpendicular and parallel to top rail**] [**wires horizontal and vertical**].

P. Toe Boards: Where indicated on Drawings, provide toe boards at railings around openings and at edge of open-sided floors and platforms. Fabricate to dimensions and details indicated.

2.9 ALUMINUM FINISHES

A. Clear Anodic Finish: AAMA 611, [**AA-M12C22A41, Class I, 0.018 mm**] [**AA-M12C22A31, Class II, 0.010 mm**] or thicker.

B. Color Anodic Finish: AAMA 611, [**AA-M12C22A42/A44, Class I, 0.018 mm**] [**AA-M12C22A32/A34, Class II, 0.010 mm**] or thicker.

1. Color: [**Champagne**] [**Light bronze**] [**Medium bronze**] [**Dark bronze**] [**Black**] [**Match Architect's sample**] [**As selected by Architect from full range of industry colors and color densities**] <**Insert color**>.

C. Baked-Enamel or Powder-Coat Finish: AAMA 2603 except with a minimum dry film thickness of 1.5 mils. Comply with coating manufacturer's written instructions for cleaning, conversion coating, and applying and baking finish.

1. Color and Gloss: [**As indicated by manufacturer's designations**] [**Match Architect's sample**] [**As selected by Architect from manufacturer's full range**] <**Insert color and gloss**>.

D. Siliconized Polyester Finish: Epoxy primer and silicone-modified, polyester-enamel topcoat; with a dry film thickness of not less than 0.2 mil for primer and 0.8 mil for topcoat.

1. Color and Gloss: [**As indicated by manufacturer's designations**] [**Match Architect's sample**] [**As selected by Architect from manufacturer's full range**] <**Insert color and gloss**>.

2.10 COPPER-ALLOY FINISHES

A. Buffed Finish: M21 (Mechanical Finish: Buffed, smooth specular).

B. Buffed Finish, Lacquered: M21-O6x (Mechanical Finish: Buffed, smooth specular; Coating: Clear organic, air dried, as specified below).

1. Clear, Organic Coating: Lacquer specified for copper alloys, applied by air spray in two coats in accordance with manufacturer's written instructions, with interim drying, to a total thickness of 1 mil.

C. Medium-Satin Finish, Lacquered: M32-O6x (Mechanical Finish: Directionally textured, medium satin; Coating: Clear, organic, air dried, as specified below).

1. Clear, Organic Coating: Lacquer specified for copper alloys, applied by air spray in two coats in accordance with manufacturer's written instructions, with interim drying, to a total thickness of 1 mil.

D. Statuary Conversion Coating over Satin Finish: M31-C55 (Mechanical Finish: Directionally textured, fine satin; Chemical Finish: Conversion coating, sulfide) [**, with color matching Architect's sample**].

E. Patina Conversion Coating: M36-C12-C52 (Mechanical Finish: Directionally textured, uniform; Chemical Finish: Nonetched cleaned, degreased; Chemical Finish: Conversion coating, ammonium sulfate) [**, with color matching Architect's sample**].

2.11 STAINLESS STEEL FINISHES

A. Stainless Steel Tubing Finishes:

1. 180-Grit Polished Finish: Uniform, directionally textured finish.

2. 320-Grit Polished Finish: Oil-ground, uniform, fine, directionally textured finish.
3. Polished and Buffed Finish: 320-grit finish followed by buffing [**to a high luster finish**] [**to a mirrorlike finish**] [**to match Architect's sample**].

B. Stainless Steel Sheet and Plate Finishes:

1. Directional Satin Finish: ASTM A480/A480M, No. 4.
2. High-Luster Finish: ASTM A480/A480M, No. 7.
3. Mirror Finish: ASTM A480/A480M, No. 8.

2.12 STEEL AND IRON FINISHES

A. Galvanized Railings:

1. Hot-dip galvanize [**exterior**] steel and iron railings, including hardware, after fabrication.
2. Hot-dip galvanize indicated steel and iron railings, including hardware, after fabrication.
3. Comply with ASTM A123/A123M for hot-dip galvanized railings.
4. Comply with ASTM A153/A153M for hot-dip galvanized hardware.
5. Do not quench or apply post-galvanizing treatments that might interfere with paint adhesion.

B. For galvanized railings, provide hot-dip galvanized fittings, brackets, fasteners, sleeves, and other ferrous components.

C. Preparing Galvanized Railings for Shop Priming: After galvanizing, thoroughly clean railings of grease, dirt, oil, flux, and other foreign matter, and treat with etching cleaner [**and as follows:**]

1. Comply with SSPC-SP 16.

D. For nongalvanized-steel railings, provide nongalvanized ferrous-metal fittings, brackets, fasteners, and sleeves; however, hot-dip galvanize anchors to be embedded in exterior concrete or masonry.

E. Preparation for Shop Priming: Prepare uncoated ferrous-metal surfaces to comply with [**SSPC-SP 6/NACE No. 3.**] [**SSPC-SP 7/NACE No. 4.**] [**requirements indicated below:**]

1. Exterior Railings: SSPC-SP 6/NACE No. 3.
2. Railings Indicated To Receive Zinc-Rich Primer: SSPC-SP 6/NACE No. 3.
3. Railings Indicated To Receive Primers Specified in Section 09 9600 "High-Performance Coatings": SSPC-SP 6/NACE No. 3.
4. Other Railings: SSPC-SP 7/NACE No. 4.

F. Primer Application: Apply shop primer to prepared surfaces of railings unless otherwise indicated. Comply with requirements in SSPC-PA 1 for shop painting. Primer need not be applied to surfaces to be embedded in concrete or masonry.

G. High-Performance Coating: Apply epoxy intermediate and polyurethane topcoats to prime-coated surfaces. Comply with coating manufacturer's written instructions and with requirements in SSPC-PA 1 for shop painting. Apply at spreading rates recommended by coating manufacturer.

1. Color: [**As indicated by manufacturer's designations**] [**Match Architect's sample**] [**As selected by Architect from manufacturer's full range**].

PART 3 - EXECUTION

3.1 INSTALLATION, GENERAL

A. Perform cutting, drilling, and fitting required for installing railings.

1. Fit exposed connections together to form tight, hairline joints.
2. Install railings level, plumb, square, true to line; without distortion, warp, or rack.
3. Set railings accurately in location, alignment, and elevation; measured from established lines and levels.
4. Do not weld, cut, or abrade surfaces of railing components that have been coated or finished after fabrication and that are intended for field connection by mechanical or other means without further cutting or fitting.
5. Set posts plumb within a tolerance of 1/16 inch in 3 feet.
6. Align rails so variations from level for horizontal members and variations from parallel with rake of steps and ramps for sloping members do not exceed 1/4 inch in 12 feet.

B. Control of Corrosion: Prevent galvanic action and other forms of corrosion by insulating metals and other materials from direct contact with incompatible materials.

1. Coat concealed surfaces of [**aluminum**] [**and**] [**copper alloys**] that will be in contact with grout, concrete, masonry, wood, or dissimilar metals, with a heavy coat of bituminous paint.

3.2 ANCHORING POSTS

A. Use stainless steel pipe sleeves preset and anchored into concrete for installing posts. After posts have been inserted into sleeves, fill annular space between post and sleeve with [**nonshrink, nonmetallic grout**] [**or**] [**anchoring cement**], mixed and placed to comply with anchoring material manufacturer's written instructions.

B. Form or core-drill holes not less than 5 inches deep and 3/4 inch larger than OD of post for installing posts in concrete. Clean holes of loose material, insert posts, and fill annular space between post and concrete with [**nonshrink, nonmetallic grout**] [**or**] [**anchoring cement**], mixed and placed to comply with anchoring material manufacturer's written instructions.

C. Anchor posts to metal surfaces with flanges, angle type, or floor type as required by conditions, connected to posts and to metal supporting members as follows:

D. Install removable railing sections, where indicated on Drawings, in slip-fit metal sockets cast in concrete.

3.3 ATTACHING RAILINGS

A. Attach handrails to walls with wall brackets [**, except where end flanges are used**]. Provide brackets with [**1-1/2-inch**] <**Insert dimension**> clearance from inside face of handrail and finished wall surface.

B. Secure wall brackets [**and railing end flanges**] to building construction as follows:

1. For concrete and solid masonry anchorage, use drilled-in expansion shields and hanger or lag bolts.
2. For hollow masonry anchorage, use toggle bolts.
3. For wood stud partitions, use hanger or lag bolts set into studs or wood backing between studs. Coordinate with carpentry work to locate backing members.
4. For steel-framed partitions, use hanger or lag bolts set into [**fire-retardant-treated**] wood backing between studs. Coordinate with stud installation to locate backing members.
5. For steel-framed partitions, fasten brackets directly to steel framing or concealed steel reinforcements using self-tapping screws of size and type required to support structural loads.
6. For steel-framed partitions, fasten brackets with toggle bolts installed through flanges of steel framing or through concealed steel reinforcements.

C. Touchup Painting:

1. Immediately after erection, clean field welds, bolted connections, and abraded areas of shop paint, and paint exposed areas with the same material used for shop painting to comply with SSPC-PA 1 for touching up shop-painted surfaces.

3.4 CLEANING

A. Clean [**aluminum**] [**and**] [**stainless steel**] by washing thoroughly with clean water and soap, rinsing with clean water, and wiping dry.

B. Galvanized Surfaces: Clean field welds, bolted connections, and abraded areas and repair galvanizing to comply with ASTM A780/A780M.

END OF SECTION 05 7300

SECTION 06 1000 - ROUGH CARPENTRY

PART 1 - GENERAL

1.1 RELATED DOCUMENTS

A. Drawings and general provisions of the Contract, including General and Supplementary Conditions and Division 01 Specification Sections, apply to this Section.

1.2 SUMMARY

A. Section Includes:

1. Framing with dimension lumber.
2. Framing with timber.
3. Framing with engineered wood products.
4. Shear wall panels.
5. Rooftop equipment bases and support curbs.
6. Wood blocking and nailers.
7. Wood furring.
8. Wood sleepers.
9. Utility shelving.
10. Plywood backing panels.

B. Related Requirements:

1. Section 06 1063 "Exterior Rough Carpentry."
2. Section 06 1300 "Heavy Timber Construction."
3. Section 06 1533 "Wood Patio Decking" for elevated decks, including support framing.
4. Section 06 1600 "Sheathing" for sheathing, subflooring, and underlayment.
5. Section 06 1753 "Shop-Fabricated Wood Trusses" for wood trusses made from dimension lumber.
6. Section 31 3116 "Termite Control" for site application of borate treatment to wood framing.

1.3 DEFINITIONS

A. Boards or Strips: Lumber of less than 2 inches nominal (38 mm actual) size in least dimension.

B. Dimension Lumber: Lumber of 2 inches nominal (38 mm actual) size or greater but less than 5 inches nominal (114 mm actual) size in least dimension.

C. Exposed Framing: Framing not concealed by other construction.

D. OSB: Oriented strand board.

E. Timber: Lumber of 5 inches nominal (114 mm actual) size or greater in least dimension.

1.4 ACTION SUBMITTALS

A. Product Data: For each type of process and factory-fabricated product. Indicate component materials and dimensions and include construction and application details.

1. Include data for fire-retardant treatment from chemical treatment manufacturer and certification by treating plant that treated materials comply with requirements. Include physical properties of treated materials based on testing by a qualified independent testing agency.
2. For fire-retardant treatments, include physical properties of treated lumber both before and after exposure to elevated temperatures, based on testing by a qualified independent testing agency according to ASTM D5664.
3. For products receiving a waterborne treatment, include statement that moisture content of treated materials was reduced to levels specified before shipment to Project site.
4. Fastener Patterns: Full-size templates for fasteners in exposed framing.

1.5 INFORMATIONAL SUBMITTALS

A. Material Certificates:

1. For dimension lumber specified to comply with minimum allowable unit stresses. Indicate species and grade selected for each use and design values approved by the ALSC Board of Review.

B. Evaluation Reports: For the following, from ICC-ES:

1. Wood-preservative-treated wood.
2. Fire-retardant-treated wood.
3. Engineered wood products.
4. Shear panels.
5. Power-driven fasteners.
6. Post-installed anchors.
7. Metal framing anchors.

1.6 QUALITY ASSURANCE

A. Testing Agency Qualifications: For testing agency providing classification marking for fire-retardant treated material, an inspection agency acceptable to authorities having jurisdiction that periodically performs inspections to verify that the material bearing the classification marking is representative of the material tested.

1.7 DELIVERY, STORAGE, AND HANDLING

A. Stack wood products flat with spacers beneath and between each bundle to provide air circulation. Protect wood products from weather by covering with waterproof sheeting, securely anchored. Provide for air circulation around stacks and under coverings.

PART 2 - PRODUCTS

2.1 WOOD PRODUCTS, GENERAL

A. Lumber: Comply with DOC PS 20 and applicable rules of grading agencies indicated. If no grading agency is indicated, comply with the applicable rules of any rules-writing agency certified by the ALSC Board of Review. Grade lumber by an agency certified by the ALSC Board of Review to inspect and grade lumber under the rules indicated.

1. Factory mark each piece of lumber with grade stamp of grading agency.
2. For exposed lumber indicated to receive a stained or natural finish, [**mark grade stamp on end or back of each piece**] [**or**] [**omit grade stamp and provide certificates of grade compliance issued by grading agency**].
3. Dress lumber, S4S, unless otherwise indicated.

B. Maximum Moisture Content: 19 percent unless otherwise indicated.

C. Engineered Wood Products: Acceptable to authorities having jurisdiction and for which current model code research or evaluation reports exist that show compliance with building code in effect for Project.

1. Allowable design stresses, as published by manufacturer, shall meet or exceed those indicated. Manufacturer's published values shall be determined from empirical data or by rational engineering analysis and demonstrated by comprehensive testing performed by a qualified independent testing agency.

2.2 WOOD-PRESERVATIVE-TREATED LUMBER

A. Preservative Treatment by Pressure Process: AWPA U1; Use Category UC2 [**for interior construction not in contact with ground, Use Category UC3b for exterior construction not in contact with ground, and Use Category UC4a for items in contact with ground**].

1. Preservative Chemicals: Acceptable to authorities having jurisdiction and containing no arsenic or chromium. [**Do not use inorganic boron (SBX) for sill plates.**]
2. For exposed items indicated to receive a stained or natural finish, chemical formulations shall not require incising, contain colorants, bleed through, or otherwise adversely affect finishes.

B. Kiln-dry lumber after treatment to a maximum moisture content of 19 percent. Do not use material that is warped or that does not comply with requirements for untreated material.

C. Mark lumber with treatment quality mark of an inspection agency approved by the ALSC Board of Review.

1. For exposed lumber indicated to receive a stained or natural finish, mark end or back of each piece or omit marking and provide certificates of treatment compliance issued by inspection agency.

D. Application: Treat [**items indicated on Drawings, and the following:**]

1. Wood cants, nailers, curbs, equipment support bases, blocking, stripping, and similar members in connection with roofing, flashing, vapor barriers, and waterproofing.
2. Wood sills, sleepers, blocking, [**furring,**] [**stripping,**] and similar concealed members in contact with masonry or concrete.
3. Wood framing and furring attached directly to the interior of below-grade exterior masonry or concrete walls.
4. Wood framing members that are less than 18 inches above the ground in crawlspaces or unexcavated areas.
5. Wood floor plates that are installed over concrete slabs-on-grade.

2.3 DIMENSION LUMBER FRAMING

A. Load-Bearing Partitions: No. 2 grade.

1. Application: Exterior walls and interior load-bearing partitions.
2. Species:
   a. Hem-fir (north); NLGA.
   b. Southern pine; SPIB.
   c. Douglas fir-larch; WCLIB or WWPA.
   d. Southern pine or mixed southern pine; SPIB.
   e. Spruce-pine-fir; NLGA.
   f. Douglas fir-south; WWPA.
   g. Hem-fir; WCLIB or WWPA.
   h. Douglas fir-larch (north); NLGA.
   i. Spruce-pine-fir (south); NeLMA, WCLIB, or WWPA.

B. Ceiling Joists: Construction or No. 2 grade.

1. Species:
   a. Hem-fir (north); NLGA.
   b. Southern pine; SPIB.
   c. Douglas fir-larch; WCLIB or WWPA.
   d. Douglas fir-larch (north); NLGA.
   e. Southern pine or mixed southern pine; SPIB.
   f. Spruce-pine-fir; NLGA.
   g. Hem-fir; WCLIB or WWPA.
   h. Douglas fir-south; WWPA.
   i. Spruce-pine-fir (south); NeLMA, WCLIB, or WWPA.
   j. Northern species; NLGA.
   k. Eastern softwoods; NeLMA.
   l. Western woods; WCLIB or WWPA.

C. Joists, Rafters, and Other Framing Not Listed Above: No. 2 grade.

D. Species:

1. Hem-fir (north); NLGA.
2. Southern pine; SPIB.
3. Douglas fir-larch; WCLIB or WWPA.
4. Southern pine or mixed southern pine; SPIB.

5. Spruce-pine-fir; NLGA.
6. Douglas fir-south; WWPA.
7. Hem-fir; WCLIB or WWPA.
8. Douglas fir-larch (north); NLGA.
9. Spruce-pine-fir (south); NeLMA, WCLIB, or WWPA.

E. Joists, Rafters, and Other Framing Not Listed Above: Any species of machine stress-rated dimension lumber with a grade of not less than 2400f-2.0E.

F. Joists, Rafters, and Other Framing Not Listed Above: Any species and grade with a modulus of elasticity of at least 1,500,000 psi (10 350 MPa) and an extreme fiber stress in bending of at least 1000 psi (6.9 MPa) for 2-inch nominal (38-mm actual) thickness and 12-inch nominal (286-mm actual) width for single-member use.

2.4 ENGINEERED WOOD PRODUCTS

A. Source Limitations: Obtain each type of engineered wood product from single source from a single manufacturer.

B. Laminated-Veneer Lumber: Structural composite lumber made from wood veneers with grain primarily parallel to member lengths, evaluated and monitored according to ASTM D5456 and manufactured with an exterior-type adhesive complying with ASTM D2559.

1. Manufacturers: Subject to compliance with requirements, available manufacturers offering products that may be incorporated into the Work include, but are not limited to the following:
   a. Boise Cascade Corporation.
   b. Finnforest USA.
   c. Georgia-Pacific Gypsum LLC.
   d. Jager Building Systems Inc.
   e. Louisiana-Pacific Corporation.
   f. Pacific Woodtech Corporation.
   g. Roseburg.
   h. Standard Structures Inc.
   i. Stark Truss Company, Inc.
   j. West Fraser Timber Co., Ltd.
2. Extreme Fiber Stress in Bending, Edgewise: 3100 psi (21.3 MPa) for 12-inch nominal-(286-mm actual-) depth members.
3. Modulus of Elasticity, Edgewise: 2,000,000 psi (13 700 MPa).

2.5 MISCELLANEOUS LUMBER

A. General: Provide miscellaneous lumber indicated and lumber for support or attachment of other construction, including the following:

1. Blocking.
2. Nailers.
3. Rooftop equipment bases and support curbs.
4. Cants.

5. Furring.
6. Grounds.
7. Utility shelving.

B. Dimension Lumber Items: [**Construction or No. 2**] grade lumber of any species.

1. Hem-fir (north); NLGA.
2. Mixed southern pine or southern pine; SPIB.
3. Spruce-pine-fir; NLGA.
4. Hem-fir; WCLIB or WWPA.
5. Spruce-pine-fir (south); NeLMA, WCLIB, or WWPA.
6. Western woods; WCLIB or WWPA.
7. Northern species; NLGA.
8. Eastern softwoods; NeLMA.

C. Utility Shelving: Lumber with 19 percent maximum moisture content of any of the following species and grades:

1. Eastern white pine, Idaho white, lodgepole, ponderosa, or sugar pine; Premium or No. 2 Common (Sterling) grade; NeLMA, NLGA, WCLIB, or WWPA.
2. Mixed southern pine or southern pine; No. 2 grade; SPIB.
3. Hem-fir or hem-fir (north); Construction or No. 2 Common grade; NLGA, WCLIB, or WWPA.
4. Spruce-pine-fir (south) or spruce-pine-fir; Construction or No. 2 Common grade; NeLMA, NLGA, WCLIB, or WWPA.

D. Concealed Boards: [**19**] percent maximum moisture content and [**any of**]the following species and grades:

1. Mixed southern pine or southern pine; No. [**2**] [**3**] grade; SPIB.
2. Hem-fir or hem-fir (north); Construction or No. 2 Common grade; NLGA, WCLIB, or WWPA.
3. Spruce-pine-fir (south) or spruce-pine-fir; Construction or No. 2 Common grade; NeLMA, NLGA, WCLIB, or WWPA.
4. Eastern softwoods; No. [**2**] Common grade; NeLMA.
5. Northern species; No. [**2**] Common grade; NLGA.
6. Western woods; [**Construction or No. 2 Common**] grade; WCLIB or WWPA.

E. For blocking not used for attachment of other construction, Utility, Stud, or No. 3 grade lumber of any species may be used provided that it is cut and selected to eliminate defects that will interfere with its attachment and purpose.

F. For blocking and nailers used for attachment of other construction, select and cut lumber to eliminate knots and other defects that will interfere with attachment of other work.

G. For furring strips for installing plywood or hardboard paneling, select boards with no knots capable of producing bent-over nails and damage to paneling.

2.6 FASTENERS

A. General: Fasteners shall be of size and type indicated and shall comply with requirements specified in this article for material and manufacture. into wood substrate.

1. Where rough carpentry is exposed to weather, in ground contact, pressure-preservative treated, or in area of high relative humidity, provide fasteners [**with hot-dip zinc coating complying with ASTM A153/A153M**] .

B. Nails, Brads, and Staples: ASTM F1667.

C. Power-Driven Fasteners: Fastener systems with an evaluation report acceptable to authorities having jurisdiction, based on ICC-ES AC70.

D. Post-Installed Anchors: Fastener systems with an evaluation report acceptable to authorities having jurisdiction, based on [**ICC-ES AC01**] [**ICC-ES AC58**] [**ICC-ES AC193**] [**or**] [**ICC-ES AC308**] as appropriate for the substrate.

1. Material: Carbon-steel components, zinc plated to comply with ASTM B633, Class Fe/Zn 5.
2. Material: Stainless steel with bolts and nuts complying with ASTM F593 and ASTM F594, Alloy Group 1 or 2 (ASTM F738M and ASTM F836M, Grade A1 or A4).

2.7 METAL FRAMING ANCHORS

A. Manufacturers: Subject to compliance with requirements, available manufacturers offering products that may be incorporated into the Work include, but are not limited to the following:

1. Cleveland Steel Specialty Co.
2. KC Metals Products, Inc.
3. Phoenix Metal Products, Inc.
4. Simpson Strong-Tie Co., Inc.

B. Allowable design loads, as published by manufacturer, shall meet or exceed those [**indicated**] . Manufacturer's published values shall be determined from empirical data or by rational engineering analysis and demonstrated by comprehensive testing performed by a qualified independent testing agency. Framing anchors shall be punched for fasteners adequate to withstand same loads as framing anchors.

C. Galvanized-Steel Sheet: Hot-dip, zinc-coated steel sheet complying with ASTM A653/A653M, G60 coating designation.

1. Use for interior locations unless otherwise indicated.

D. Hot-Dip, Heavy-Galvanized Steel Sheet: ASTM A653/A653M; structural steel (SS), high-strength low-alloy steel Type A (HSLAS Type A), or high-strength low-alloy steel Type B (HSLAS Type B); G185 coating designation; and not less than 0.036 inch thick.

1. Use for wood-preservative-treated lumber and where indicated.

E. Stainless Steel Sheet: ASTM A240/A240M or ASTM A666, Type 304.

1. Use for exterior locations and where indicated.

F. Joist Hangers: U-shaped joist hangers with 2-inch- (50-mm-) long seat and 1-1/4-inch- (32-mm-) wide nailing flanges at least 85 percent of joist depth.

1. Thickness: 0.050 inch (1.3 mm).

G. I-Joist Hangers: U-shaped joist hangers with 2-inch- (50-mm-) long seat and 1-1/4-inch- (32-mm-) wide nailing flanges full depth of joist. Nailing flanges provide lateral support at joist top chord.

1. Thickness: 0.050 inch (1.3 mm).

H. Top Flange Hangers: U-shaped joist hangers, full depth of joist, formed from metal strap with tabs bent to extend over and be fastened to supporting member.

1. Strap Width: 1-1/2 inches (38 mm).
2. Thickness: 0.050 inch (1.3 mm).

I. Bridging: Rigid, V-section, nailless type, 0.050 inch (1.3 mm) thick, length to suit joist size and spacing.

J. Post Bases: Adjustable-socket type for bolting in place with standoff plate to raise post 1 inch (25 mm) above base and with 2-inch- (50-mm-) minimum side cover, socket 0.062 inch (1.6 mm) thick, and standoff and adjustment plates 0.108 inch (2.8 mm) thick.

K. Joist Ties: Flat straps, with holes for fasteners, for tying joists together over supports.

1. Width: 3/4 inch (19 mm).
2. Thickness: 0.050 inch (1.3 mm).
3. Length: 16 inches (400 mm).

L. Rafter Tie-Downs: Bent strap tie for fastening rafters or roof trusses to wall studs below, 1-1/2 inches (38 mm) wide by 0.050 inch (1.3 mm) thick. Tie fastens to side of rafter or truss, face of top plates, and side of stud below.

M. Rafter Tie-Downs (Hurricane or Seismic Ties): Bent strap tie for fastening rafters or roof trusses to wall studs below, 2-1/4 inches (57 mm) wide by 0.062 inch (1.6 mm) thick. Tie fits over top of rafter or truss and fastens to both sides of rafter or truss, face of top plates, and side of stud below.

N. Floor-to-Floor Ties: Flat straps, with holes for fasteners, for tying upper floor wall studs to band joists and lower floor studs, 1-1/4 inches (32 mm) wide by 0.050 inch (1.3 mm) thick by 36 inches (914 mm) long.

O. Hold-Downs: Brackets for bolting to wall studs and securing to foundation walls with anchor bolts or to other hold-downs with threaded rods and designed with first of two bolts placed seven bolt diameters from reinforced base.

1. Bolt Diameter: 5/8 inch (15.8 mm).
2. Width: 2-1/2 inches (64 mm).
3. Body Thickness: 0.108 inch (2.8 mm).

4. Base Reinforcement Thickness: 0.108 inch (2.8 mm).

P. Wall Bracing: T-shaped bracing made for letting into studs in saw kerf, 1-1/8 inches (29 mm) wide by 9/16 inch (14 mm) deep by 0.034 inch (0.85 mm) thick with hemmed edges.

Q. Wall Bracing: Angle bracing made for letting into studs in saw kerf, 15/16 by 15/16 by 0.040 inch (24 by 24 by 1 mm) thick with hemmed edges.

2.8 MISCELLANEOUS MATERIALS

A. Sill-Sealer Gaskets:

1. Glass-fiber-resilient insulation, fabricated in strip form, for use as a sill sealer; 1-inch nominal thickness, compressible to 1/32 inch; selected from manufacturer's standard widths to suit width of sill members indicated.
2. Closed-cell neoprene foam, 1/4 inch thick, selected from manufacturer's standard widths to suit width of sill members indicated.

B. Flexible Flashing: Composite, self-adhesive, flashing product consisting of a pliable, [**butyl rubber**] [**or**] [**rubberized-asphalt**] compound, bonded to a high-density polyethylene film, aluminum foil, or spunbonded polyolefin to produce an overall thickness of not less than 0.025 inch.

C. Adhesives for Gluing [**Furring**] [**and**] [**Sleepers**] to Concrete or Masonry: Formulation complying with ASTM D3498 that is approved for use indicated by adhesive manufacturer.

D. Water-Repellent Preservative: NWWDA-tested and -accepted formulation containing 3-iodo-2-propynyl butyl carbamate, combined with an insecticide containing chloropyrifos as its active ingredient.

PART 3 - EXECUTION

3.1 INSTALLATION, GENERAL

A. Framing Standard: Comply with AF&PA's WCD 1, "Details for Conventional Wood Frame Construction," unless otherwise indicated.

B. Framing with Engineered Wood Products: Install engineered wood products to comply with manufacturer's written instructions.

C. Set rough carpentry to required levels and lines, with members plumb, true to line, cut, and fitted. Fit rough carpentry accurately to other construction. Locate furring, nailers, blocking, and similar supports to comply with requirements for attaching other construction.

D. Install plywood backing panels by fastening to studs; coordinate locations with utilities requiring backing panels.

E. Install shear wall panels to comply with manufacturer's written instructions.

F. Install metal framing anchors to comply with manufacturer's written instructions. Install fasteners through each fastener hole.

G. Install sill sealer gasket to form continuous seal between sill plates and foundation walls.

H. Do not splice structural members between supports unless otherwise indicated.

I. Provide blocking and framing as indicated and as required to support facing materials, fixtures, specialty items, and trim.

1. Provide metal clips for fastening gypsum board or lath at corners and intersections where framing or blocking does not provide a surface for fastening edges of panels. Space clips not more than 16 inches (406 mm) o.c.

J. Provide fire blocking in furred spaces, stud spaces, and other concealed cavities as indicated and as follows:

1. Fire block furred spaces of walls, at each floor level, at ceiling, and at not more than 96 inches (2438 mm) o.c. with solid wood blocking or noncombustible materials accurately fitted to close furred spaces.
2. Fire block concealed spaces of wood-framed walls and partitions at each floor level, at ceiling line of top story, and at not more than 96 inches (2438 mm) o.c. Where fire blocking is not inherent in framing system used, provide closely fitted solid wood blocks of same width as framing members and 2-inch nominal (38-mm actual) thickness.
3. Fire block concealed spaces between floor sleepers with same material as sleepers to limit concealed spaces to not more than 100 sq. ft. (9.3 sq. m) and to solidly fill space below partitions.
4. Fire block concealed spaces behind combustible cornices and exterior trim at not more than 20 feet (6 m) o.c.

K. Sort and select lumber so that natural characteristics do not interfere with installation or with fastening other materials to lumber. Do not use materials with defects that interfere with function of member or pieces that are too small to use with minimum number of joints or optimum joint arrangement.

L. Comply with AWPA M4 for applying field treatment to cut surfaces of preservative-treated lumber.

1. Use inorganic boron for items that are continuously protected from liquid water.
2. Use copper naphthenate for items not continuously protected from liquid water.

M. Where wood-preservative-treated lumber is installed adjacent to metal decking, install continuous flexible flashing separator between wood and metal decking.

N. Securely attach rough carpentry work to substrate by anchoring and fastening as indicated, complying with the following:

1. Table 2304.9.1, "Fastening Schedule," in ICC's International Building Code (IBC).
2. Table R602.3(1), "Fastener Schedule for Structural Members," and Table R602.3(2), "Alternate Attachments," in ICC's International Residential Code for One- and Two-Family Dwellings.

3. ICC-ES evaluation report for fastener.

O. Use steel common nails unless otherwise indicated. Select fasteners of size that will not fully penetrate members where opposite side will be exposed to view or will receive finish materials. Make tight connections between members. Install fasteners without splitting wood. Drive nails snug but do not countersink nail heads unless otherwise indicated.

P. For exposed work, arrange fasteners in straight rows parallel with edges of members, with fasteners evenly spaced, and with adjacent rows staggered.

1. Comply with approved fastener patterns where applicable. Before fastening, mark fastener locations, using a template made of sheet metal, plastic, or cardboard.
2. Use finishing nails unless otherwise indicated. Countersink nail heads and fill holes with wood filler.
3. Use common nails unless otherwise indicated. Drive nails snug but do not countersink nail heads.

3.2 INSTALLATION OF WOOD BLOCKING AND NAILERS

A. Install where indicated and where required for screeding or attaching other work. Form to shapes indicated and cut as required for true line and level of attached work. Coordinate locations with other work involved.

B. Attach items to substrates to support applied loading. Recess bolts and nuts flush with surfaces unless otherwise indicated.

C. Provide permanent grounds of dressed, pressure-preservative-treated, key-beveled lumber not less than 1-1/2 inches (38 mm) wide and of thickness required to bring face of ground to exact thickness of finish material. Remove temporary grounds when no longer required.

3.3 INSTALLATION OF WOOD FURRING

A. Install level and plumb with closure strips at edges and openings. Shim with wood as required for tolerance of finish work.

B. Furring to Receive Plywood or Hardboard Paneling: Install 1-by-3-inch nominal- (19-by-63-mm actual-) size furring horizontally and vertically at 24 inches (610 mm) o.c.

C. Furring to Receive Gypsum Board: Install 1-by-2-inch nominal- (19-by-38-mm actual-) size furring vertically at 16 inches (406 mm) o.c.

3.4 INSTALLATION OF WALL AND PARTITION FRAMING

A. General: Provide single bottom plate and double top plates using members of 2-inch nominal (38-mm actual) thickness whose widths equal that of studs, except single top plate may be used for non-load-bearing partitions and for load-bearing partitions where framing members bearing on partition are located directly over studs. Fasten plates to supporting construction unless otherwise indicated.

1. For exterior walls, provide 2-by-6-inch nominal- (38-by-140-mm actual-) size wood studs spaced 16 inches (406 mm) o.c. unless otherwise indicated.
2. For interior partitions and walls, provide 2-by-6-inch nominal- (38-by-140-mm actual-) size wood studs spaced 16 inches (406 mm) o.c. unless otherwise indicated.
3. Provide continuous horizontal blocking at midheight of partitions more than 96 inches (2438 mm) high, using members of 2-inch nominal (38-mm actual) thickness and of same width as wall or partitions.

B. Construct corners and intersections with three or more studs, except that two studs may be used for interior non-load-bearing partitions.

C. Frame openings with multiple studs and headers. Provide nailed header members of thickness equal to width of studs. Support headers on jamb studs.

1. For non-load-bearing partitions, provide double-jamb studs and headers not less than 4-inch nominal (89-mm actual) depth for openings 48 inches (1200 mm) and less in width, 6-inch nominal (140-mm actual) depth for openings 48 to 72 inches (1200 to 1800 mm) in width, 8-inch nominal (184-mm actual) depth for openings 72 to 120 inches (1800 to 3000 mm) in width, and not less than 10-inch nominal (235-mm actual) depth for openings 10 to 12 feet (3 to 3.6 m) in width.
2. For load-bearing walls, provide double-jamb studs for openings 60 inches (1500 mm) and less in width, and triple-jamb studs for wider openings. Provide headers of depth indicated or, if not indicated, according to Table R502.5(1) or Table R502.5(2), as applicable, in ICC's International Residential Code for One- and Two-Family Dwellings.

D. Provide diagonal bracing in exterior walls, at both walls of each external corner, at 45-degree angle, full-story height unless otherwise indicated. Use 1-by-4-inch nominal- (19-by-89-mm actual-) size boards, let-in flush with faces of studs.

3.5 INSTALLATION OF FLOOR JOIST FRAMING

A. Fire Cuts: At joists built into masonry, bevel cut ends 3 inches (76 mm) and do not embed more than 4 inches (102 mm).

B. Frame openings with headers and trimmers supported by metal joist hangers; double headers and trimmers where span of header exceeds 48 inches (1200 mm).

C. Do not notch in middle third of joists; limit notches to one-sixth depth of joist, one-third at ends. Do not bore holes larger than one-third depth of joist; do not locate closer than 2 inches (50 mm) from top or bottom.

D. Provide solid blocking of 2-inch nominal (38-mm actual) thickness by depth of joist at ends of joists unless nailed to header or band.

E. Lap members framing from opposite sides of beams, girders, or partitions not less than 4 inches (102 mm) or securely tie opposing members together. Provide solid blocking of 2-inch nominal (38-mm actual) thickness by depth of joist over supports.

F. Anchor members paralleling masonry with 1/4-by-1-1/4-inch (6.4-by-32-mm) metal strap anchors spaced not more than 96 inches (2438 mm) o.c., extending over and fastening to three

joists. Embed anchors at least 4 inches (102 mm) into grouted masonry with ends bent at right angles and extending 4 inches (102 mm) beyond bend.

G. Provide solid blocking between joists under jamb studs for openings.

H. Under non-load-bearing partitions, provide double joists separated by solid blocking equal to depth of studs above.

1. Provide triple joists separated as above, under partitions receiving ceramic tile and similar heavy finishes or fixtures.

I. Provide bridging of type indicated below, at intervals of 96 inches (2438 mm) o.c., between joists.

1. Steel bridging installed to comply with bridging manufacturer's written instructions.

J. Diagonal wood bridging formed from bevel-cut, 1-by-3-inch nominal- (19-by-64-mm actual-) size lumber, double-crossed and nailed at both ends to joists.

3.6 INSTALLATION OF CEILING JOIST AND RAFTER FRAMING

A. Ceiling Joists: Install with crown edge up and complying with requirements specified above for floor joists. Face nail to ends of parallel rafters.

1. Where ceiling joists are at right angles to rafters, provide additional short joists parallel to rafters from wall plate to first joist; nail to ends of rafters and to top plate, and nail to first joist or anchor with framing anchors or metal straps. Provide 1-by-8-inch nominal- (19-by-184-mm actual-) size or 2-by-4-inch nominal- (38-by-89-mm actual-) size stringers spaced 48 inches (1200 mm) o.c. crosswise over main ceiling joists.

B. Rafters: Notch to fit exterior wall plates and use metal framing anchors. Double rafters to form headers and trimmers at openings in roof framing, if any, and support with metal hangers. Where rafters abut at ridge, place directly opposite each other and nail to ridge member or use metal ridge hangers.

1. At valleys, provide double-valley rafters of size indicated or, if not indicated, of same thickness as regular rafters and 2 inches (50 mm) deeper. Bevel ends of jack rafters for full bearing against valley rafters.
2. At hips, provide hip rafter of size indicated or, if not indicated, of same thickness as regular rafters and 2 inches (50 mm) deeper. Bevel ends of jack rafters for full bearing against hip rafter.

C. Provide collar beams (ties) as indicated or, if not indicated, provide 1-by-6-inch nominal- (19-by-140-mm actual-) size boards between every third pair of rafters, but not more than 48 inches (1219 mm) o.c. Locate below ridge member, at third point of rafter span. Cut ends to fit roof slope and nail to rafters.

D. Provide special framing as indicated for eaves, overhangs, dormers, and similar conditions if any.

3.7 INSTALLATION OF STAIR FRAMING

A. Provide stair framing members of size, space, and configuration indicated or, if not indicated, to comply with the following requirements:

1. Size: 2-by-12-inch nominal (38-by-286-mm actual) size, minimum.
2. Material: Laminated-veneer lumber or solid lumber.
3. Notching: Notch rough carriages to receive treads, risers, and supports; leave at least 3-1/2 inches (89 mm) of effective depth.
4. Spacing: At least three framing members for each 36-inch (914-mm) clear width of stair.

B. Provide stair framing with no more than 3/16-inch (4.7-mm) variation between adjacent treads and risers and no more than 3/8-inch (9.5-mm) variation between largest and smallest treads and risers within each flight.

3.8 PROTECTION

A. Protect wood that has been treated with inorganic boron (SBX) from weather. If, despite protection, inorganic boron-treated wood becomes wet, apply EPA-registered borate treatment. Apply borate solution by spraying to comply with EPA-registered label.

B. Protect rough carpentry from weather. If, despite protection, rough carpentry becomes [**wet enough that moisture content exceeds that specified**], apply EPA-registered borate treatment. Apply borate solution by spraying to comply with EPA-registered label.

END OF SECTION 06 1000

SECTION 06 1600 - SHEATHING

PART 1 - GENERAL

1.1 RELATED DOCUMENTS

A. Drawings and general provisions of the Contract, including General and Supplementary Conditions and Division 01 Specification Sections, apply to this Section.

1.2 SUMMARY

A. Section Includes:

1. Wall sheathing.
2. Roof sheathing.
3. Parapet sheathing.
4. Composite nail base insulated roof sheathing.
5. Subflooring.
6. Underlayment.
7. Sheathing joint and penetration treatment.

B. Related Requirements:

1. Section 06 1000 "Rough Carpentry" for plywood backing panels.
2. Section 07 2500 "Weather Barriers" for water-resistive barrier applied over wall sheathing.

1.3 PREINSTALLATION MEETINGS

A. Preinstallation Conference: Conduct conference at Project site.

1. Review air-barrier and water-resistant glass-mat gypsum sheathing requirements and installation, special details, transitions, mockups, air-leakage testing, protection, and work scheduling that covers air-barrier and water-resistant glass-mat gypsum sheathing.

1.4 ACTION SUBMITTALS

A. Product Data: For each type of process and factory-fabricated product. Indicate component materials and dimensions and include construction and application details.

1. Include data for wood-preservative treatment from chemical treatment manufacturer and certification by treating plant that treated plywood complies with requirements. Indicate type of preservative used and net amount of preservative retained.
2. Include data for fire-retardant treatment from chemical treatment manufacturer and certification by treating plant that treated plywood complies with requirements. Include physical properties of treated materials.

3. For fire-retardant treatments, include physical properties of treated plywood both before and after exposure to elevated temperatures, based on testing by a qualified independent testing agency according to ASTM D5516.
4. For products receiving waterborne treatment, include statement that moisture content of treated materials was reduced to levels specified before shipment to Project site.
5. For air-barrier and water-resistant glass-mat gypsum sheathing, include manufacturer's technical data and tested physical and performance properties of products.

B. Shop Drawings: For air-barrier and water-resistant glass-mat gypsum sheathing assemblies.

1. Show locations and extent of sheathing, accessories, and assemblies specific to Project conditions.
2. Include details for sheathing joints and cracks, counterflashing strips, penetrations, inside and outside corners, terminations, and tie-ins with adjoining construction.
3. Include details of interfaces with other materials that form part of air barrier.

1.5 INFORMATIONAL SUBMITTALS

A. Qualification Data: For Installer.

B. Product Certificates: From air-barrier and water-resistant glass-mat gypsum sheathing manufacturer, certifying compatibility of sheathing accessory materials with Project materials that connect to or that come in contact with the sheathing.

C. Product Test Reports: For each air-barrier and water-resistant glass-mat gypsum sheathing assembly, indicating compliance with specified requirements, for tests performed by a qualified testing agency.

D. Evaluation Reports: For the following, from ICC-ES:

1. Wood-preservative-treated plywood.
2. Fire-retardant-treated plywood.
3. Foam-plastic sheathing.
4. Air-barrier and water-resistant glass-mat gypsum sheathing.

E. Field quality-control reports.

1.6 QUALITY ASSURANCE

A. Installer Qualifications: An entity that employs installers and supervisors who are trained and approved by manufacturer of air-barrier and water-resistant glass-mat gypsum sheathing.

1. Installer shall be licensed by ABAA according to ABAA's Quality Assurance Program and shall employ ABAA-certified installers and supervisors on Project.

B. Testing Agency Qualifications:

1. For testing agency providing classification marking for fire-retardant-treated material, an inspection agency acceptable to authorities having jurisdiction that periodically performs

inspections to verify that the material bearing the classification marking is representative of the material tested.

2. For testing and inspecting agency providing tests and inspections related to air-barrier and water-resistant glass-mat gypsum sheathing: an independent agency, qualified according to ASTM E329 for testing indicated, and certified by Air Barrier Association of America, Inc.

1.7 PRECONSTRUCTION TESTING

A. Preconstruction Testing Service: Owner will engage a qualified testing agency to perform preconstruction testing on field mockups.

1.8 DELIVERY, STORAGE, AND HANDLING

A. Stack panels flat with spacers beneath and between each bundle to provide air circulation. Protect sheathing from weather by covering with waterproof sheeting, securely anchored. Provide for air circulation around stacks and under coverings.

PART 2 - PRODUCTS

2.1 PERFORMANCE REQUIREMENTS

A. Fire-Resistance Ratings: As tested according to ASTM E 119; testing by a qualified testing agency. Identify products with appropriate markings of applicable testing agency.

1. Fire-Resistance Ratings: Indicated by design designations from UL's "Fire Resistance Directory" or from the listings of another qualified testing agency.

B. Air-Barrier and Water-Resistant Glass-Mat Gypsum Sheathing Performance: Air-barrier and water-resistant glass-mat gypsum sheathing assembly, and seals with adjacent construction, shall be capable of performing as a continuous air barrier and as a liquid-water drainage plane flashed to discharge to the exterior incidental condensation or water penetration. Air-barrier assemblies shall be capable of accommodating substrate movement and of sealing substrate expansion and control joints, construction material changes, penetrations, and transitions at perimeter conditions without deterioration and air leakage exceeding specified limits.

2.2 WOOD PANEL PRODUCTS

A. Emissions: Products shall meet the testing and product requirements of the California Department of Public Health's "Standard Method for the Testing and Evaluation of Volatile Organic Chemical Emissions from Indoor Sources Using Environmental Chambers."

B. Thickness: As needed to comply with requirements specified, but not less than thickness indicated.

C. Factory mark panels to indicate compliance with applicable standard.

2.3 PRESERVATIVE-TREATED PLYWOOD

A. Preservative Treatment by Pressure Process: AWPA U1; Use Category UC2.

1. Preservative Chemicals: Acceptable to authorities having jurisdiction and containing no arsenic or chromium.

B. Mark plywood with appropriate classification marking of an inspection agency acceptable to authorities having jurisdiction.

C. Application: [**Treat items indicated on Drawings**] [**and plywood in contact with masonry or concrete or used with roofing, flashing, vapor barriers, and waterproofing**].

2.4 WALL SHEATHING

A. Plywood Sheathing: [**DOC PS 1**] , sheathing.

1. Span Rating: Not less than 16/0.
2. Nominal Thickness: Not less than 11/32 inch (8.7 mm).

B. Oriented-Strand-Board Sheathing: DOC PS 2, [**Exposure 1, Structural I**] sheathing.

1. Span Rating: Not less than 16/0.
2. Nominal Thickness: Not less than 5/16 inch (7.9 mm).

C. Paper-Surfaced Gypsum Sheathing: ASTM C 1396/C 1396M, gypsum sheathing; with water-resistant-treated core and with water-repellent paper bonded to core's face, back, and long edges.

1. Manufacturers: Subject to compliance with requirements, available manufacturers offering products that may be incorporated into the Work include, but are not limited to the following:
   a. American Gypsum.
   b. Georgia-Pacific Gypsum LLC.
   c. National Gypsum Company.
2. Type and Thickness: Type X, 5/8 inch (15.9 mm) thick.
3. Edge and End Configuration: V-shaped, tongue-and-groove long edges; square ends.
4. Size: 24 by 96 inches (610 by 2438 mm) for horizontal and 48 by 96 inches (1219 by 2438 mm) for vertical installation.

2.5 ROOF SHEATHING

A. Plywood Sheathing: [**DOC PS 1**] , sheathing.

1. Span Rating: Not less than 24/0.
2. Nominal Thickness: Not less than 15/32 inch (11.9 mm).

B. Oriented-Strand-Board Sheathing: DOC PS 2, [**Exposure 1, Structural I**] sheathing.

1. Span Rating: Not less than 24/0.
2. Nominal Thickness: Not less than 15/32 inch (11.1 mm).

2.6 PARAPET SHEATHING

A. Plywood Sheathing: [**DOC PS 1**] , sheathing.

1. Span Rating: Not less than 16/0.
2. Nominal Thickness: Not less than 15/32 inch (11.9 mm).

B. Oriented-Strand-Board Sheathing: DOC PS 2, [**Exposure 1, Structural I**] sheathing.

1. Span Rating: Not less than 16/0.
2. Nominal Thickness: Not less than 7/16 inch (11.1 mm).

2.7 SUBFLOORING AND UNDERLAYMENT

A. Plywood Combination Subfloor-Underlayment: DOC PS 1, [**Exterior, Structural I, C-C Plugged**] single-floor panels.

1. Span Rating: Not less than 16.
2. Nominal Thickness: Not less than 23/32 inch (18.3 mm).
3. Edge Detail: Square.
4. Surface Finish: Fully sanded face.

B. Oriented-Strand-Board Combination Subfloor-Underlayment: DOC PS 2, Exposure 1 single-floor panels.

1. Span Rating: Not less than 16.
2. Nominal Thickness: Not less than 23/32 inch (18.3 mm).
3. Edge Detail: Square.
4. Surface Finish: Fully sanded face.

C. Plywood Subflooring: [**DOC PS 1**] , single-floor panels or sheathing.

1. Span Rating: Not less than 16.
2. Nominal Thickness: Not less than 23/32 inch (18.3 mm).

D. Oriented-Strand-Board Subflooring: DOC PS 2, Exposure 1 [**, Structural I sheathing**] .

1. Span Rating: Not less than 16.
2. Nominal Thickness: Not less than 23/32 inch (18.3 mm).

E. Underlayment: Provide underlayment in nominal thicknesses indicated or, if not indicated, not less than 1/4 inch over smooth subfloors and not less than 3/8 inch over board or uneven subfloors.

1. Plywood Underlayment for Resilient Flooring: DOC PS 1, [**Exterior A-C**] with fully sanded face.
2. Plywood Underlayment for Ceramic Tile: DOC PS 1, Exterior, C-C Plugged, not less than 5/8-inch nominal thickness.
3. Plywood Underlayment for Carpet: DOC PS 1, [**Exterior, C-C Plugged**] .
4. Particleboard Underlayment: ANSI A208.1, [**Grade PBU**] .
5. Hardboard Underlayment: ANSI A135.4, Class 4 (Service), Surface S1S; with back side sanded.

2.8 FASTENERS

A. General: Provide fasteners of size and type indicated that comply with requirements specified in this article for material and manufacture.

1. For [**roof**] [**parapet**] [**and**] [**wall**] sheathing, provide fasteners [**with hot-dip zinc coating complying with ASTM A 153/A 153M**] .

B. Nails, Brads, and Staples: ASTM F1667.

C. Power-Driven Fasteners: Fastener systems with an evaluation report acceptable to authorities having jurisdiction, based on ICC-ES AC70.

D. Screws for Fastening Sheathing to Wood Framing: ASTM C1002.

E. Screws for Fastening Wood Structural Panels to Cold-Formed Metal Framing: ASTM C954, except with wafer heads and reamer wings, length as recommended by screw manufacturer for material being fastened.

F. Screws for Fastening Gypsum Sheathing to Cold-Formed Metal Framing: Steel drill screws, in length recommended by sheathing manufacturer for thickness of sheathing to be attached.

1. For steel framing less than 0.0329 inch (0.835 mm) thick, use screws that comply with ASTM C1002.
2. For steel framing from 0.033 to 0.112 inch (0.84 to 2.84 mm) thick, use screws that comply with ASTM C954.

G. Screws for Fastening Composite Nail Base Insulated Roof Sheathing to Metal Roof Deck: Steel drill screws, in type and length recommended by sheathing manufacturer for thickness of sheathing to be attached, with organic-polymer or other corrosion-protective coating having a salt-spray resistance of more than 800 hours according to ASTM B117. Provide washers or plates if recommended by sheathing manufacturer.

2.9 SHEATHING JOINT-AND-PENETRATION TREATMENT MATERIALS

A. Sealant for [**Paper-Surfaced**] Gypsum Sheathing: Elastomeric, medium-modulus, neutral-curing silicone joint sealant compatible with joint substrates formed by gypsum sheathing and other materials, recommended by sheathing manufacturer for application indicated and complying with requirements for elastomeric sealants specified in Section 07 9200 "Joint Sealants."

2.10 MISCELLANEOUS MATERIALS

A. Adhesives for Field Gluing Panels to Wood Framing: Formulation complying with [**APA AFG-01**] [**ASTM D 3498**] that is approved for use with type of construction panel indicated by manufacturers of both adhesives and panels.

PART 3 - EXECUTION

3.1 INSTALLATION, GENERAL

A. Do not use materials with defects that impair quality of sheathing or pieces that are too small to use with minimum number of joints or optimum joint arrangement. Arrange joints so that pieces do not span between fewer than three support members.

B. Cut panels at penetrations, edges, and other obstructions of work; fit tightly against abutting construction unless otherwise indicated.

C. Securely attach to substrate by fastening as indicated, complying with the following:

1. Table 2304.9.1, "Fastening Schedule," in the ICC's International Building Code.
2. Table R602.3(1), "Fastener Schedule for Structural Members," and Table R602.3(2), "Alternate Attachments," in the ICC's International Residential Code for One- and Two-Family Dwellings.
3. ICC-ES evaluation report for fastener.

D. Use common wire nails unless otherwise indicated. Select fasteners of size that will not fully penetrate members where opposite side will be exposed to view or will receive finish materials. Make tight connections. Install fasteners without splitting wood.

E. Coordinate [**wall**] [**parapet**] [**and**] [**roof**] sheathing installation with flashing and joint-sealant installation so these materials are installed in sequence and manner that prevent exterior moisture from passing through completed assembly.

F. Do not bridge building expansion joints; cut and space edges of panels to match spacing of structural support elements.

G. Coordinate sheathing installation with installation of materials installed over sheathing so sheathing is not exposed to precipitation or left exposed at end of the workday when rain is forecast.

3.2 WOOD STRUCTURAL PANEL INSTALLATION

A. General: Comply with applicable recommendations in APA Form No. E30, "Engineered Wood Construction Guide," for types of structural-use panels and applications indicated.

B. Fastening Methods: Fasten panels as indicated below:

1. Combination Subfloor-Underlayment:
   a. [**Glue and nail**] to wood framing.
   b. Screw to cold-formed metal framing.
   c. Space panels 1/8 inch apart at edges and ends.
2. Subflooring:
   a. [**Glue and nail**] to wood framing.
   b. Screw to cold-formed metal framing.
   c. Space panels 1/8 inch apart at edges and ends.

3. Wall and Roof Sheathing:
   a. [**Nail**] to wood framing. [**Apply a continuous bead of glue to framing members at edges of wall sheathing panels.**]
   b. Screw to cold-formed metal framing.
   c. Space panels 1/8 inch apart at edges and ends.
4. Underlayment:
   a. [**Nail**] to subflooring.
   b. Space panels 1/32 inch apart at edges and ends.
   c. Fill and sand edge joints of underlayment receiving resilient flooring immediately before installing flooring.

3.3 GYPSUM SHEATHING INSTALLATION

A. Comply with GA-253 and with manufacturer's written instructions.

1. Fasten gypsum sheathing to wood framing with [**nails**] [**or**] [**screws**].
2. Fasten gypsum sheathing to cold-formed metal framing with screws.
3. Install panels with a 3/8-inch gap where non-load-bearing construction abuts structural elements.
4. Install panels with a 1/4-inch gap where they abut masonry or similar materials that might retain moisture, to prevent wicking.

B. Apply fasteners so heads bear tightly against face of sheathing, but do not cut into facing.

C. Horizontal Installation: Install sheathing with V-grooved edge down and tongue edge up. Interlock tongue with groove to bring long edges in contact with edges of adjacent panels without forcing. Abut ends over centers of studs, and stagger end joints of adjacent panels not less than one stud spacing. Attach at perimeter and within field of panel to each stud.

1. Space fasteners approximately 8 inches (200 mm) o.c. and set back a minimum of 3/8 inch (9.5 mm) from edges and ends of panels.
2. For sheathing under stucco cladding, panels may be initially tacked in place with screws if overlying self-furring metal lath is screw-attached through sheathing to studs immediately after sheathing is installed.

D. Vertical Installation: Install vertical edges centered over studs. Abut ends and edges with those of adjacent panels. Attach at perimeter and within field of panel to each stud.

1. Space fasteners approximately 8 inches (200 mm) o.c. and set back a minimum of 3/8 inch (9.5 mm) from edges and ends of panels.
2. For sheathing under stucco cladding, panels may be initially tacked in place with screws if overlying self-furring metal lath is screw-attached through sheathing to studs immediately after sheathing is installed.

E. Seal sheathing joints according to sheathing manufacturer's written instructions.

1. Apply elastomeric sealant to joints and fasteners and trowel flat. Apply sufficient amount of sealant to completely cover joints and fasteners after troweling. Seal other penetrations and openings.

2. Apply glass-fiber sheathing tape to glass-mat gypsum sheathing joints and apply and trowel sealant to embed entire face of tape in sealant. Apply sealant to exposed fasteners with a trowel so fasteners are completely covered. Seal other penetrations and openings.

F. Air-Barrier and Water-Resistant Glass-Mat Gypsum Sheathing:

1. Install accessory materials according to sheathing manufacturer's written instructions and details to form a seal with adjacent construction, to seal fasteners, and ensure continuity of air and water barrier.
   a. Coordinate the installation of sheathing with installation of roofing membrane and base flashing to ensure continuity of air barrier with roofing membrane.
   b. Install transition strip on roofing membrane or base flashing, so that a minimum of 3 inches (75 mm) of coverage is achieved over each substrate.
2. Connect and seal sheathing material continuously to air barriers specified under other Sections as well as to roofing-membrane air barrier, concrete below-grade structures, floor-to-floor construction, exterior glazing and window systems, glazed curtain-wall systems, storefront systems, exterior louvers, exterior door framing, and other construction used in exterior wall openings, using accessory materials.
3. Apply joint sealants forming part of air-barrier assembly within manufacturer's recommended application temperature ranges. Consult manufacturer when sealant cannot be applied within these temperature ranges.
4. Wall Openings: Prime concealed, perimeter frame surfaces of windows, curtain walls, storefronts, and doors. Apply transition strip, so that a minimum of 3 inches (75 mm) of coverage is achieved over each substrate. Maintain 3 inches (75 mm) of full contact over firm bearing to perimeter frames, with not less than 1 inch (25 mm) of full contact.
   a. Transition Strip: Roll firmly to enhance adhesion.
   b. Preformed Silicone Extrusion: Set in full bed of silicone sealant applied to walls, frame, and air-barrier material.
5. Fill gaps in perimeter frame surfaces of windows, curtain walls, storefronts, doors, and miscellaneous penetrations of sheathing material with foam sealant.
6. Seal strips and transition strips around masonry reinforcing or ties and penetrations with termination mastic.
7. Seal top of through-wall flashings to sheathing with an additional 6-inch- (150-mm-) wide, transition strip.
8. Seal exposed edges of strips at seams, cuts, penetrations, and terminations not concealed by metal counterflashings or ending in reglets with termination mastic.
9. Repair punctures, voids, and deficient lapped seams in strips and transition strips extending 6 inches (150 mm) beyond repaired areas in strip direction.

3.4 CEMENTITIOUS BACKER UNIT INSTALLATION

A. Install panels and treat joints according to ANSI A108.11 and manufacturer's written instructions for type of application indicated.

3.5 FIBERBOARD SHEATHING INSTALLATION

A. Comply with ASTM C846 and with manufacturer's written instructions.

B. Fasten fiberboard sheathing panels to intermediate supports and then at edges and ends. Use galvanized roofing nails or galvanized staples; comply with manufacturer's recommended spacing and referenced fastening schedule. Drive fasteners flush with surface of sheathing and locate perimeter fasteners at least 3/8 inch (9.5 mm) from edges and ends.

C. Install sheathing vertically with long edges parallel to, and centered over, studs. Install solid wood blocking where end joints do not occur over framing. Allow 1/8-inch (3-mm) open space between edges and ends of adjacent units. Stagger horizontal joints if any.

D. Cover sheathing as soon as practical after installation to prevent deterioration from wetting.

3.6 PARTICLEBOARD UNDERLAYMENT INSTALLATION

A. Comply with CPA's recommendations for type of subfloor indicated. Fill and sand gouges, gaps, and chipped edges. Sand uneven joints flush.

1. Fastening Method: Glue and nail underlayment to subflooring.

3.7 HARDBOARD UNDERLAYMENT INSTALLATION

A. Comply with CPA's recommendations and hardboard manufacturer's written instructions for preparing and applying hardboard underlayment.

1. Fastening Method: [**Nail**] underlayment to subflooring.

3.8 FIELD QUALITY CONTROL

A. ABAA Quality Assurance Program: Perform examinations, preparation, installation, testing, and inspections under ABAA's Quality Assurance Program.

B. Testing and Inspecting Agency: Owner will engage a qualified testing agency to perform tests and inspections.

C. Inspections: Air-barrier and water-resistant glass-mat gypsum sheathing, accessories, and installation are subject to inspection for compliance with requirements. Inspections may include the following:

1. Continuity of air-barrier system has been achieved throughout the building envelope with no gaps or holes.
2. Laps in strips and transition strips have complied with minimum requirements and have been shingled in the correct direction (or mastic has been applied on exposed edges), with no fishmouths.
3. Termination mastic has been applied on cut edges.
4. Strips and transition strips have been firmly adhered to substrate.
5. Compatible materials have been used.
6. Transitions at changes in direction and structural support at gaps have been provided.
7. Connections between assemblies (sheathing and sealants) have complied with requirements for cleanliness, surface preparation and priming, structural support, integrity, and continuity of seal.

8. All penetrations have been sealed.

D. Tests: As determined by testing agency from among the following tests:

1. Air-Leakage-Location Testing: Air-barrier sheathing assemblies will be tested for evidence of air leakage according to ASTM E1186, chamber pressurization or depressurization with smoke tracers.
2. Air-Leakage-Volume Testing: Air-barrier assemblies will be tested for air-leakage rate according to ASTM E783 or ASTM E2357.

E. Air barriers will be considered defective if they do not pass tests and inspections.

F. Repair damage to air barriers caused by testing; follow manufacturer's written instructions.

G. Prepare test and inspection reports.

END OF SECTION 06 1600

SECTION 06 1753 - SHOP-FABRICATED WOOD TRUSSES

PART 1 - GENERAL

1.1 RELATED DOCUMENTS

A. Drawings and general provisions of the Contract, including General and Supplementary Conditions and Division 01 Specification Sections, apply to this Section.

1.2 SUMMARY

A. Section Includes:

1. Wood roof trusses.
2. Wood floor trusses.
3. Wood girder trusses.

B. Related Requirements:

1. Section 31 3116 "Termite Control" for site application of borate treatment to wood trusses.

1.3 DEFINITIONS

A. Metal-Plate-Connected Wood Trusses: Planar structural units consisting of metal-plate-connected members fabricated from dimension lumber and cut and assembled before delivery to Project site.

1.4 ACTION SUBMITTALS

A. Product Data: For metal-plate connectors, metal truss accessories, and fasteners.

1. Include data for wood-preservative treatment from chemical treatment manufacturer and certification from treating plant that treated materials comply with requirements. Indicate type of preservative used and net amount of preservative retained.
2. Include data for fire-retardant treatment from chemical-treatment manufacturer and certification from treating plant that treated materials comply with requirements. Include physical properties of treated materials based on testing by a qualified independent testing agency.
3. For fire-retardant treatments, include physical properties of treated lumber both before and after exposure to elevated temperatures, based on testing by a qualified independent testing agency according to ASTM D5664.
4. For products receiving a waterborne treatment, include statement that moisture content of treated materials was reduced to levels specified before shipment to truss fabricator.

B. Shop Drawings: Show fabrication and installation details for trusses.

1. Show location, pitch, span, camber, configuration, and spacing for each type of truss required.
2. Indicate sizes, stress grades, and species of lumber.
3. Indicate locations of permanent bracing required to prevent buckling of individual truss members due to design loads.
4. Indicate locations, sizes, and materials for permanent bracing required to prevent buckling of individual truss members due to design loads.
5. Indicate type, size, material, finish, design values, orientation, and location of metal connector plates.
6. Show splice details and bearing details.

C. Delegated-Design Submittal: For metal-plate-connected wood trusses indicated to comply with performance requirements and design criteria, including analysis data signed and sealed by the qualified professional engineer responsible for their preparation.

1.5 INFORMATIONAL SUBMITTALS

A. Qualification Data: For metal connector-plate manufacturer, professional engineer and fabricator.

B. Material Certificates: For dimension lumber specified to comply with minimum specific gravity. Indicate species and grade selected for each use and specific gravity.

C. Product Certificates: For metal-plate-connected wood trusses, signed by officer of truss-fabricating firm.

D. Evaluation Reports: For the following, from ICC-ES:

1. Wood-preservative-treated lumber.
2. Fire-retardant-treated wood.
3. Metal-plate connectors.
4. Metal truss accessories.

1.6 QUALITY ASSURANCE

A. Metal Connector-Plate Manufacturer Qualifications: A manufacturer that is a member of TPI and that complies with quality-control procedures in TPI 1 for manufacture of connector plates.

1. Manufacturer's responsibilities include providing professional engineering services needed to assume engineering responsibility.
2. Engineering Responsibility: Preparation of Shop Drawings and comprehensive engineering analysis by a qualified professional engineer.

B. Testing Agency Qualifications: For testing agency providing classification marking for fire-retardant-treated material, an inspection agency acceptable to authorities having jurisdiction that periodically performs inspections to verify that the material bearing the classification marking is representative of the material tested.

1.7 DELIVERY, STORAGE, AND HANDLING

A. Handle and store trusses to comply with recommendations in SBCA BCSI, "Building Component Safety Information: Guide to Good Practice for Handling, Installing, Restraining, & Bracing Metal Plate Connected Wood Trusses."

1. Store trusses flat, off of ground, and adequately supported to prevent lateral bending.
2. Protect trusses from weather by covering with waterproof sheeting, securely anchored.
3. Provide for air circulation around stacks and under coverings.

B. Inspect trusses showing discoloration, corrosion, or other evidence of deterioration. Discard and replace trusses that are damaged or defective.

PART 2 - PRODUCTS

2.1 PERFORMANCE REQUIREMENTS

A. Delegated Design: Engage a qualified professional engineer, as defined in Section 01 4000 "Quality Requirements," to design metal-plate-connected wood trusses.

B. Structural Performance: Metal-plate-connected wood trusses shall be capable of withstanding design loads within limits and under conditions indicated. Comply with requirements in TPI 1 unless more stringent requirements are specified below.

1. Design Loads: As indicated.
2. Maximum Deflection under Design Loads:
   a. Roof Trusses: Vertical deflection of 1/360 of span.
   b. Floor Trusses: Vertical deflection of 1/360 of span.

C. Comply with applicable requirements and recommendations of TPI 1, TPI DSB, and SBCA BCSI.

D. Wood Structural Design Standard: Comply with applicable requirements in AF&PA's "National Design Specifications for Wood Construction" and its "Supplement."

2.2 DIMENSION LUMBER

A. Lumber: DOC PS 20 and applicable rules of any rules-writing agency certified by the American Lumber Standard Committee (ALSC) Board of Review. Provide lumber graded by an agency certified by the ALSC Board of Review to inspect and grade lumber under the rules indicated.

1. Factory mark each piece of lumber with grade stamp of grading agency.
2. For exposed lumber indicated to receive a stained or natural finish, omit grade stamp and provide certificates of grade compliance issued by grading agency.
3. Provide dressed lumber, S4S.
4. Provide dry lumber with [**19**] percent maximum moisture content at time of dressing.

B. Minimum Chord Size for Roof Trusses: 2 by 6 inches nominal (38 by 140 mm actual) for both top and bottom chords.

C. Minimum Specific Gravity for Top Chords: 0.50.

D. Permanent Bracing: Provide wood bracing that complies with requirements for miscellaneous lumber in [**Section 06 1000 "Rough Carpentry."**]

2.3 METAL CONNECTOR PLATES

A. Manufacturers: Subject to compliance with requirements, available manufacturers offering products that may be incorporated into the Work include, but are not limited to the following:

1. Alpine Engineered Products, Inc.; a division of ITW Building Components Group, Inc.
2. Cherokee Metal Products, Inc.; Masengill Machinery Company.
3. CompuTrus, Inc.
4. Eagle Metal Products.
5. MiTek Industries, Inc.
6. Robbins Engineering, Inc.

B. Fabricate connector plates to comply with TPI 1.

C. Hot-Dip Galvanized-Steel Sheet: ASTM A653/A653M; Structural Steel (SS), high-strength low-alloy steel Type A (HSLAS Type A), or high-strength low-alloy steel Type B (HSLAS Type B); G60 coating designation; and not less than 0.036 inch thick.

1. Use for interior locations unless otherwise indicated.

D. Hot-Dip Heavy-Galvanized-Steel Sheet: ASTM A653/A653M; Structural Steel (SS), high-strength low-alloy steel Type A (HSLAS Type A), or high-strength low-alloy steel Type B (HSLAS Type B); G185 (Z550) coating designation; and not less than 0.036 inch (0.9 mm) thick.

1. Use for wood-preservative-treated lumber and where indicated.

E. Stainless Steel Sheet: ASTM A240/A240M or ASTM A666, Type 304, and not less than 0.035 inch (0.88 mm) thick.

1. Use for exterior locations and where indicated.

2.4 FASTENERS

A. Provide fasteners of size and type indicated that comply with requirements specified in this article for material and manufacture.

1. Provide fasteners for use with metal framing anchors that comply with written recommendations of metal framing manufacturer.
2. Where trusses are exposed to weather, in ground contact, or in area of high relative humidity, provide fasteners with hot-dip zinc coating complying with ASTM A153/A153M of Type 304 stainless steel.

B. Nails, Brads, and Staples: ASTM F1667.

2.5 METAL FRAMING ANCHORS AND ACCESSORIES

A. Manufacturers: Subject to compliance with requirements, provide products by one of the following:

1. Cleveland Steel Specialty Co.
2. KC Metals Products, Inc.
3. Phoenix Metal Products, Inc.
4. Simpson Strong-Tie Co., Inc.

B. Allowable design loads, as published by manufacturer, shall comply with or exceed those [**indicated**] . Manufacturer's published values shall be determined from empirical data or by rational engineering analysis and demonstrated by comprehensive testing performed by a qualified independent testing agency. Framing anchors shall be punched for fasteners adequate to withstand same loads as framing anchors.

C. Galvanized-Steel Sheet: Hot-dip, zinc-coated steel sheet complying with ASTM A653/A653M, G60 coating designation.

1. Use for interior locations unless otherwise indicated.

D. Hot-Dip Heavy-Galvanized-Steel Sheet: ASTM A653/A653M; Structural Steel (SS), high-strength low-alloy steel Type A (HSLAS Type A), or high-strength low-alloy steel Type B (HSLAS Type B); G185 (Z550) coating designation; and not less than 0.036 inch (0.9 mm) thick.

1. Use for wood-preservative-treated lumber and where indicated.

E. Stainless Steel Sheet: ASTM A240/A240M or ASTM A666, Type 304.

1. Use for exterior locations and where indicated.

F. Truss Tie-Downs: Bent strap tie for fastening roof trusses to wall studs below, 1-1/2 inches (38 mm) wide by 0.050 inch (1.3 mm) thick. Tie fastens to one side of truss, top plates, and side of stud below]

G. Truss Tie-Downs (Hurricane or Seismic Ties): Bent strap tie for fastening roof trusses to wall studs below, 2-1/4 inches (57 mm) wide by 0.062 inch (1.6 mm) thick. Tie fits over top of truss and fastens to both sides of truss, top plates, and one side of stud below.

H. Truss Tie-Downs (Hurricane or Seismic Ties): Bent strap tie for fastening roof trusses to wall studs below, 2-1/2 inches (63 mm) wide by 0.062 inch (1.6 mm) thick. Tie fits over top of truss and fastens to both sides of truss, inside face of top plates, and both sides of stud below.

I. Roof Truss Clips: Angle clips for bracing bottom chord of roof trusses at non-load-bearing walls, 1-1/4 inches (32 mm) wide by 0.050 inch (1.3 mm) thick. Clip is fastened to truss through slotted holes to allow for truss deflection.

J. Floor Truss Hangers: U-shaped hangers, full depth of floor truss, with 1-3/4-inch- (44-mm-) long seat; formed from metal strap 0.062 inch (1.6 mm) thick with tabs bent to extend over and be fastened to supporting member.

K. Roof Truss Bracing/Spacers: U-shaped channels, 1-1/2 inches (38 mm) wide by 1 inch (25 mm) deep by 0.040 inch (1.0 mm) thick, made to fit between two adjacent trusses and accurately space them apart, and with tabs having metal teeth for fastening to trusses.

L. Drag Strut Connectors: Angle clip with one leg extended for fastening to the side of girder truss.

1. Angle clip is 3 by 3 by 0.179 by 8 inches (76 by 76 by 4.55 by 203 mm) with extended leg 8 inches (203 mm) long. Connector has galvanized finish.
2. Angle clip is 3 by 3 by 0.239 by 10-1/2 inches (76 by 76 by 6.07 by 267 mm) with extended leg 10-1/2 inches (267 mm) long. Connector has painted finish.

2.6 MISCELLANEOUS MATERIALS

A. Galvanizing Repair Paint: SSPC-Paint 20, with dry film containing a minimum of 92 percent zinc dust by weight.

2.7 FABRICATION

A. Cut truss members to accurate lengths, angles, and sizes to produce close-fitting joints.

B. Fabricate metal connector plates to sizes, configurations, thicknesses, and anchorage details required to withstand design loads for types of joint designs indicated.

C. Assemble truss members in design configuration indicated; use jigs or other means to ensure uniformity and accuracy of assembly, with joints closely fitted to comply with tolerances in TPI 1. Position members to produce design camber indicated.

1. Fabricate wood trusses within manufacturing tolerances in TPI 1.

D. Connect truss members by metal connector plates located and securely embedded simultaneously in both sides of wood members by air or hydraulic press.

2.8 SOURCE QUALITY CONTROL

A. Special Inspections: Owner will engage a qualified special inspector to perform special inspections.

1. Provide special inspector with access to fabricator's documentation of detailed fabrication and quality-control procedures that provide a basis for inspection control of the workmanship and the fabricator's ability to conform to approved construction documents and referenced standards.
2. Provide special inspector with access to places where wood trusses are being fabricated to perform inspections.

B. Correct deficiencies in Work that special inspections indicate do not comply with the Contract Documents.

PART 3 - EXECUTION

3.1 INSTALLATION

A. Install wood trusses only after supporting construction is in place and is braced and secured.

B. If trusses are delivered to Project site in more than one piece, assemble trusses before installing.

C. Hoist trusses in place by lifting equipment suited to sizes and types of trusses required, exercising care not to damage truss members or joints by out-of-plane bending or other causes.

D. Install and brace trusses according to TPI recommendations and as indicated.

E. Install trusses plumb, square, and true to line and securely fasten to supporting construction.

F. Space trusses as indicated; adjust and align trusses in location before permanently fastening.

G. Anchor trusses securely at bearing points; use metal truss tie-downs or floor truss hangers as applicable. Install fasteners through each fastener hole in metal framing anchors according to manufacturer's fastening schedules and written instructions.

H. Securely connect each truss ply required for forming built-up girder trusses.

1. Anchor trusses to girder trusses as indicated.

I. Install and fasten permanent bracing during truss erection and before construction loads are applied. Anchor ends of permanent bracing where terminating at walls or beams.

1. Install bracing to comply with [**Section 06 1000 "Rough Carpentry."**]
2. Install and fasten strongback bracing vertically against vertical web of parallel-chord floor trusses at centers indicated.

J. Install wood trusses within installation tolerances in TPI 1.

K. Do not alter trusses in field. Do not cut, drill, notch, or remove truss members.

L. Replace wood trusses that are damaged or do not comply with requirements.

1. Damaged trusses may be repaired according to truss repair details signed and sealed by the qualified professional engineer responsible for truss design, when approved by Architect.

3.2 REPAIRS AND PROTECTION

A. Protect wood that has been treated with inorganic boron (SBX) from weather. If, despite protection, inorganic boron-treated wood becomes wet, apply EPA-registered borate treatment. Apply borate solution by spraying to comply with EPA-registered label.

B. Protect wood trusses from weather. If, despite protection, wood trusses become wet, apply EPA-registered borate treatment. Apply borate solution by spraying to comply with EPA-registered label.

C. Repair damaged galvanized coatings on exposed surfaces according to ASTM A780/A780M and manufacturer's written instructions.

3.3 FIELD QUALITY CONTROL

A. Special Inspections: Owner will engage a qualified special inspector to perform special inspections to verify that temporary installation restraint/bracing and the permanent individual truss member restraint/bracing are installed in accordance with the approved truss submittal package.

END OF SECTION 06 1753

SECTION 06 2023 - INTERIOR FINISH CARPENTRY

PART 1 - GENERAL

1.1 SUMMARY

A. Section Includes:

1. Interior trim, .
2. Shelving.
3. Interior stairs and railings.

1.2 ACTION SUBMITTALS

A. Product Data: For each type of process and factory-fabricated product.

B. Samples: For each type of paneling.

PART 2 - PRODUCTS

2.1 MATERIALS, GENERAL

A. Lumber: DOC PS 20.

1. Factory mark each piece of lumber with grade stamp of inspection agency indicating grade, species, moisture content at time of surfacing, and mill.
   a. For exposed lumber, mark grade stamp on end or back of each piece, or omit grade stamp and provide certificates of grade compliance issued by inspection agency.

B. Softwood Plywood: DOC PS 1.

C. Hardboard: ANSI A135.4.

2.2 INTERIOR TRIM

A. Moldings, bases, casings, and miscellaneous trim; finger jointed pine; prepare for paint finish. See General Notes in Drawings for size and style.

B. Window Sills: finger jointed pine; prepare for paint finish. See General Notes in Drawings for size and style.

2.3 MISCELLANEOUS MATERIALS

A. Low-Emitting Materials: Adhesives shall comply with the testing and product requirements of the California Department of Health Services' "Standard Practice for the Testing of Volatile Organic Emissions from Various Sources Using Small-Scale Environmental Chambers."

B. Glue: Aliphatic-resin, polyurethane, or resorcinol wood glue recommended by manufacturer for general carpentry use.

1. Wood glue shall have a VOC content of 30 g/L or less when calculated according to 40 CFR 59, Subpart D (EPA Method 24).

C. Paneling Adhesive: Comply with paneling manufacturer's written instructions for adhesives.

1. Adhesive shall have a VOC content of 50 g/L or less when calculated according to 40 CFR 59, Subpart D (EPA Method 24).

PART 3 - EXECUTION

3.1 PREPARATION

A. Before installing interior finish carpentry, condition materials to average prevailing humidity in installation areas for a minimum of 24 hours [**unless longer conditioning is recommended by manufacturer**].

3.2 INSTALLATION, GENERAL

A. Install interior finish carpentry level, plumb, true, and aligned with adjacent materials. Use concealed shims where necessary for alignment.

1. Scribe and cut interior finish carpentry to fit adjoining work. Refinish and seal cuts as recommended by manufacturer.
2. Countersink fasteners, fill surface flush, and sand unless otherwise indicated.
3. Install to tolerance of 1/8 inch in 96 inches for level and plumb. Install adjoining interior finish carpentry with 1/32-inch maximum offset for flush installation and 1/16-inch maximum offset for reveal installation.
4. Install stairs with no more than 3/16-inch (4.7-mm) variation between adjacent treads and risers and with no more than 3/8-inch (9.5-mm) variation between largest and smallest treads and risers within each flight.

3.3 INSTALLATION OF STANDING AND RUNNING TRIM

A. Install with minimum number of joints practical, using full-length pieces from maximum lengths of lumber available. Cope or Miter at returns, miter at outside corners, and cope at inside corners to produce tight-fitting joints with full-surface contact throughout length of joint. Use scarf joints for end-to-end joints.

END OF SECTION 06 2023

SECTION 07 2100 - THERMAL INSULATION

PART 1 - GENERAL

1.1 SUMMARY

A. Section Includes:

1. Glass-fiber blanket insulation.
2. Glass-fiber board insulation.

1.2 ACTION SUBMITTALS

A. Product Data: For each type of product indicated.

B. Product test reports.

C. Research/evaluation reports.

PART 2 - PRODUCTS

2.1 GLASS-FIBER BLANKET INSULATION

A. Glass-Fiber Blanket Insulation, Unfaced : ASTM C665, Type I; passing ASTM E136 for combustion characteristics.

1. Manufacturers: Subject to compliance with requirements, available manufacturers offering products that may be incorporated into the Work include, but are not limited to, the following:
   a. Certainteed; SAINT-GOBAIN.
   b. Guardian Building Products, Inc.
   c. Johns Manville; a Berkshire Hathaway company.
   d. Knauf Insulation.
   e. Owens Corning.
2. Flame-Spread Index: Not more than 25 when tested in accordance with ASTM E84.
3. Smoke-Developed Index: Not more than 50 when tested in accordance with ASTM E84.
4. Eave Ventilation Troughs: Preformed, rigid fiberboard or plastic sheets designed and sized to fit between roof framing members and to provide cross ventilation between insulated attic spaces and vented eaves

2.2 GLASS-FIBER BOARD INSULATION

A. Glass-Fiber Board Insulation, Unfaced : ASTM C612, Type IA; unfaced **,** passing ASTM E136 for combustion characteristics.

1. Manufacturers: Subject to compliance with requirements, available manufacturers offering products that may be incorporated into the Work include, but are not limited to, the following:
   a. Certainteed; SAINT-GOBAIN.
   b. Johns Manville; a Berkshire Hathaway company.
   c. Knauf Insulation.
   d. Owens Corning.
2. Flame-Spread Index: Not more than 25 when tested in accordance with ASTM E84.
3. Smoke-Developed Index: Not more than 50 when tested in accordance with ASTM E84.

PART 3 - EXECUTION

3.1 INSTALLATION, GENERAL

A. Comply with insulation manufacturer's written instructions applicable to products and applications.

B. Install insulation that is undamaged, dry, and unsoiled and that has not been left exposed to ice, rain, or snow at any time.

C. Extend insulation to envelop entire area to be insulated. Fit tightly around obstructions and fill voids with insulation. Remove projections that interfere with placement.

D. Provide sizes to fit applications and selected from manufacturer's standard thicknesses, widths, and lengths. Apply single layer of insulation units unless multiple layers are otherwise shown or required to make up total thickness.

3.2 INSTALLATION OF BELOW-GRADE INSULATION

A. On vertical surfaces, set insulation units using manufacturer's recommended adhesive loosely laid according to manufacturer's written instructions.

   1. If not otherwise indicated, extend insulation a minimum of [24 inches (610 mm)] below exterior grade line.

B. On horizontal surfaces, loosely lay insulation units according to manufacturer's written instructions. Stagger end joints and tightly abut insulation units.

   1. If not otherwise indicated, extend insulation a minimum of [24 inches (610 mm)] in from exterior walls.

3.3 INSTALLATION OF INSULATION FOR FRAMED CONSTRUCTION

A. Apply insulation units to substrates by method indicated, complying with manufacturer's written instructions. If no specific method is indicated, bond units to substrate with adhesive or use mechanical anchorage to provide permanent placement and support of units.

B. Glass-Fiber o Insulation: Install in cavities formed by framing members according to the following requirements:

1. Use insulation widths and lengths that fill the cavities formed by framing members. If more than one length is required to fill the cavities, provide lengths that will produce a snug fit between ends.
2. Place insulation in cavities formed by framing members to produce a friction fit between edges of insulation and adjoining framing members.
3. Maintain 3-inch (76-mm) clearance of insulation around recessed lighting fixtures not rated for or protected from contact with insulation.
4. Install eave ventilation troughs between roof framing members in insulated attic spaces at vented eaves.
5. For metal-framed wall cavities where cavity heights exceed 96 inches (2438 mm), support unfaced blankets mechanically and support faced blankets by taping flanges of insulation to flanges of metal studs.
6. For wood-framed construction, install blankets according to ASTM C 1320 and as follows:
   a. With faced blankets having stapling flanges, secure insulation by inset, stapling flanges to sides of framing members.

C. Miscellaneous Voids: Install insulation in miscellaneous voids and cavity spaces where required to prevent gaps in insulation using the following materials:

1. Loose-Fill Insulation: Compact to approximately 40 percent of normal maximum volume equaling a density of approximately 2.5 lb/cu. ft. (40 kg/cu. m).
2. Spray Polyurethane Insulation: Apply according to manufacturer's written instructions.

3.4 INSTALLATION OF INSULATION FOR CONCRETE SUBSTRATES

A. Install board insulation on concrete substrates by adhesively attached, spindle-type insulation anchors as follows:

1. Fasten insulation anchors to concrete substrates with insulation anchor adhesive according to anchor manufacturer's written instructions. Space anchors according to insulation manufacturer's written instructions for insulation type, thickness, and application indicated.
2. Apply insulation standoffs to each spindle to create cavity width indicated between concrete substrate and insulation.
3. After adhesive has dried, install board insulation by pressing insulation into position over spindles and securing it tightly in place with insulation-retaining washers, taking care not to compress insulation below indicated thickness.
4. Where insulation will not be covered by other building materials, apply capped washers to tips of spindles.

END OF SECTION 07 2100

SECTION 07 2500 - WEATHER BARRIERS

PART 1 - GENERAL

1.1 SUMMARY

A. Section Includes:

1. Building paper.
2. Building wrap.
3. Flexible flashing.

1.2 ACTION SUBMITTALS

A. Product Data: For each type of product.

1.3 INFORMATIONAL SUBMITTALS

A. Evaluation Reports: For water-resistive barrier and flexible flashing, from ICC-ES.

PART 2 - PRODUCTS

2.1 WATER-RESISTIVE BARRIER

A. Building Paper: ASTM D 226, Type 1 (No. 15 asphalt-saturated organic felt), unperforated.

B. Building Paper: Water-vapor-permeable, asphalt-saturated kraft building paper that complies with ICC-ES AC38, Grade D.

C. Building Wrap: ASTM E 1677, Type I air barrier; with flame-spread and smoke-developed indexes of less than 25 and 450, respectively, when tested according to ASTM E 84; UV stabilized; and acceptable to authorities having jurisdiction.

1. Products: Subject to compliance with requirements, available products that may be incorporated into the Work include, but are not limited to, the following:
   a. TYVEK PER VHDA MDCR ARCHITECTURAL #11.
2. Water-Vapor Permeance: Not less than 50 g through 1 sq. m of surface in 24 hours per ASTM E 96/E 96M, Desiccant Method (Procedure A).

D. Building-Wrap Tape: Pressure-sensitive plastic tape recommended by building-wrap manufacturer for sealing joints and penetrations in building wrap.

2.2 MISCELLANEOUS MATERIALS

A. Flexible Flashing: Self-adhesive butyl rubber or rubberized-asphalt compound, bonded to a high-density polyethylene film, aluminum foil, or spunbonded polyolefin to produce an overall thickness of not less than 0.025 inch (0.6 mm).

1. Products: Subject to compliance with requirements, available products that may be incorporated into the Work include, but are not limited to, the following:
   a. DuPont (E. I. du Pont de Nemours and Company); DuPont Flashing Tape.
   b. Grace Construction Products, a unit of W. R. Grace & Co. - Conn.; Vycor Butyl Self Adhered Flashing.
   c. Protecto Wrap Company; BT-25 XL.
   d. Raven Industries Inc.; Fortress Flashshield.
   e. Advanced Building Products Inc.; Wind-o-wrap.
   f. Carlisle Coatings & Waterproofing; CCW-705-TWF Thru-Wall Flashing.
   g. Fiberweb, Clark Hammerbeam Corp.; Aquaflash 500.
   h. Fortifiber Building Systems Group; [Fortiflash 25] [Fortiflash 40].
   i. Grace Construction Products, a unit of W. R. Grace & Co. - Conn.; [Vycor Plus Self-Adhered Flashing] [Vycor V40 Self-Adhered Flashing].
   j. MFM Building Products Corp.; Window Wrap.
   k. Polyguard Products, Inc.; [Polyguard JT-20 Tape] [Polyguard JT-30 Tape].
   l. Sandell Manufacturing Co., Inc.; Presto-Seal.

PART 3 - EXECUTION

3.1 WATER-RESISTIVE BARRIER INSTALLATION

A. Cover sheathing with water-resistive barrier as follows:

1. Cut back barrier 1/2 inch on each side of the break in supporting members at expansion- or control-joint locations.
2. Apply barrier to cover vertical flashing with a minimum 4-inch overlap unless otherwise indicated.

B. Building Paper: Apply horizontally with a 2-inch overlap and a 6-inch end lap; fasten to sheathing with galvanized staples or roofing nails.

C. Building Wrap: Comply with manufacturer's written instructions and warranty requirements.

1. Seal seams, edges, fasteners, and penetrations with tape.
2. Extend into jambs of openings and seal corners with tape.

3.2 FLEXIBLE FLASHING INSTALLATION

A. Apply flexible flashing where indicated to comply with manufacturer's written instructions.

1. Lap seams and junctures with other materials at least 4 inches except that at flashing flanges of other construction, laps need not exceed flange width.

2. Lap flashing over water-resistive barrier at bottom and sides of openings.
3. Lap water-resistive barrier over flashing at heads of openings.

END OF SECTION 07 2500

SECTION 07 3113 - ASPHALT SHINGLES

PART 1 - GENERAL

1.1 SUMMARY

A. Section Includes:

1. Asphalt shingles.
2. Underlayment.

1.2 ACTION SUBMITTALS

A. Product Data: For each type of product indicated.

B. Samples: For each exposed product and for each color and blend specified.

1.3 INFORMATIONAL SUBMITTALS

A. Product test reports.

B. Research/evaluation reports.

C. Warranties: Sample of special warranties.

1.4 CLOSEOUT SUBMITTALS

A. Maintenance data.

1.5 QUALITY ASSURANCE

A. Fire-Resistance Characteristics: Where indicated, provide asphalt shingles and related roofing materials identical to those of assemblies tested for fire resistance per test method below by UL or another testing and inspecting agency acceptable to authorities having jurisdiction. Identify products with appropriate markings of applicable testing agency.

1. Exterior Fire-Test Exposure: Class A ASTM E 108 or UL 790, for application and roof slopes indicated.

1.6 WARRANTY

Special Warranty: Standard form in which manufacturer agrees to repair or replace asphalt shingles that fail in materials or workmanship within specified warranty period.

1. Material Warranty Period: 30 years from date of Substantial Completion, .

2. Algae-Discoloration Warranty Period: Asphalt shingles will not discolor 10 years from date of Substantial Completion.

PART 2 - PRODUCTS

2.1 GLASS-FIBER-REINFORCED ASPHALT SHINGLES

A. Laminated-Strip Asphalt Shingles: ASTM D 3462, laminated, multi-ply overlay construction, glass-fiber reinforced, mineral-granule surfaced, and self-sealing.

1. Manufacturers: Subject to compliance with requirements, available manufacturers offering products that may be incorporated into the Work include, but are not limited to, the following:
2. Basis-of-Design Product: Subject to compliance with requirements, provide product indicated on Drawings or comparable product by one of the following:
   a. CertainTeed Corporation.
   b. GAF Materials Corporation.
   c. Owens Corning.

3. Butt Edge: Straight cut.
4. Strip Size: Manufacturer's standard.
5. Algae Resistance: Granules treated to resist algae discoloration.
6. Anti-fungal.
7. Color and Blends: As indicated by manufacturer's designations.

B. Hip and Ridge Shingles: Manufacturer's standard units to match asphalt shingles.

2.2 UNDERLAYMENT MATERIALS

A. Self-Adhering Sheet Underlayment, High Temperature: Minimum of 30- to 40-mil- (0.76- to 1.0-mm-) thick, slip-resisting, polyethylene-film-reinforced top surface laminated to layer of butyl or SBS-modified asphalt adhesive, with release paper backing; cold applied.

1. Thermal Stability: Stable after testing at 240 deg F (116 deg C); ASTM D 1970.
2. Low-Temperature Flexibility: Passes after testing at minus 20 deg F (29 deg C); ASTM D 1970.

2.3 ACCESSORIES

A. Asphalt Roofing Cement: ASTM D 4586, Type II, asbestos free.

B. Roofing Nails: ASTM F 1667; aluminum, stainless-steel, copper, or hot-dip galvanized-steel wire shingle nails, minimum 0.120-inch- (3-mm-) diameter, smooth shank, sharp-pointed, with a minimum 3/8-inch- (9.5-mm-) diameter flat head and of sufficient length to penetrate 3/4 inch (19 mm) into solid wood decking or extend at least 1/8 inch (3 mm) through OSB or plywood sheathing.

   1. Where nails are in contact with metal flashing, use nails made from same metal as flashing.

C. Felt Underlayment Nails: Aluminum, stainless-steel, or hot-dip galvanized-steel wire with low-profile capped heads or disc caps, 1-inch (25-mm) minimum diameter.

2.4 METAL FLASHING AND TRIM

A. General: Comply with requirements in Section 076200 "Sheet Metal Flashing and Trim."

PART 3 - EXECUTION

3.1 UNDERLAYMENT INSTALLATION

A. General: Comply with underlayment manufacturer's written installation instructions applicable to products and applications indicated unless more stringent requirements apply.

B. Single-Layer Felt Underlayment: Install on roof deck parallel with and starting at the eaves. Lap sides a minimum of 2 inches (50 mm) over underlying course. Lap ends a minimum of 4 inches (100 mm). Stagger end laps between succeeding courses at least 72 inches (1830 mm). Fasten with felt underlayment roofing nails.

   1. Install felt underlayment on roof deck not covered by self-adhering sheet underlayment. Lap sides of felt over self-adhering sheet underlayment not less than 3 inches (75 mm) in direction to shed water. Lap ends of felt not less than 6 inches (150 mm) over self-adhering sheet underlayment.
   2. Install fasteners at no more than 36 inch (900 mm)o.c.

C. Double-Layer Felt Underlayment: Install on roof deck parallel with and starting at the eaves. Install a 19-inch- (485-mm-) wide starter course at eaves and completely cover with full-width second course. Install succeeding courses lapping previous courses 19 inches (485 mm) in shingle fashion. Lap ends a minimum of 6 inches (150 mm). Stagger end laps between succeeding courses at least 72 inches (1830 mm). Fasten with felt underlayment roofing nails.

1. Apply a continuous layer of asphalt roofing cement over starter course and on felt underlayment surface to be concealed by succeeding courses as each felt course is installed. Apply at locations indicated on Drawings.
2. Install felt underlayment on roof sheathing not covered by self-adhering sheet underlayment. Lap edges over self-adhering sheet underlayment not less than 3 inches (75 mm) in direction to shed water.
3. Terminate felt underlayment extended up not less than 4 inches (100 mm)] against sidewalls, curbs, chimneys, and other roof projections.
4. Install fasteners at no more than 36 inch (900 mm)o.c.

D. Self-Adhering Sheet Underlayment: Install, wrinkle free, on roof deck. Comply with low-temperature installation restrictions of underlayment manufacturer if applicable. Install at locations indicated on Drawings, lapped in direction to shed water. Lap sides not less than 3-1/2 inches (89 mm). Lap ends not less than 6 inches (150 mm) staggered 24 inches (600 mm) between courses. Roll laps with roller. Cover underlayment within seven days.

3.2 METAL FLASHING INSTALLATION

A. General: Install metal flashings and other sheet metal to comply with requirements in Section 076200 "Sheet Metal Flashing and Trim."

1. Install metal flashings according to recommendations in ARMA's "Residential Asphalt Roofing Manual" and asphalt shingle recommendations in NRCA's "The NRCA Roofing and Waterproofing Manual."

3.3 ASPHALT SHINGLE INSTALLATION

A. General: Install asphalt shingles according to manufacturer's written instructions, recommendations in ARMA's "Residential Asphalt Roofing Manual," and asphalt shingle recommendations in NRCA's "The NRCA Roofing and Waterproofing Manual."

B. Install starter strip along lowest roof edge, consisting of an asphalt shingle strip with tabs removed at least 7 inches (175 mm) wide with self-sealing strip face up at roof edge.

1. Extend asphalt shingles [1/2 inch (13 mm)] over fasciae at eaves and rakes.
2. Install starter strip along rake edge.

C. Install first and remaining courses of asphalt shingles stair-stepping diagonally across roof deck with manufacturer's recommended offset pattern at succeeding courses, maintaining uniform exposure.

D. Install first and remaining courses of asphalt shingles stair-stepping diagonally across roof deck with manufacturer's recommended offset pattern at succeeding courses, maintaining uniform exposure.

E. Install asphalt shingles by single-strip column or racking method, maintaining uniform exposure. Install full-length first course followed by cut second course, repeating alternating pattern in succeeding courses.

F. Fasten asphalt shingle strips with a minimum of four roofing nails located according to manufacturer's written instructions.

1. Where roof slope exceeds 20:12, seal asphalt shingles with asphalt roofing cement spots.
2. Where roof slope is less than 4:12, seal asphalt shingles with asphalt roofing cement spots.
3. When ambient temperature during installation is below 50 deg F (10 deg C) Insert temperature>, seal asphalt shingles with asphalt roofing cement spots.

G. Woven Valleys: Extend succeeding asphalt shingle courses from both sides of valley 12 inches (300 mm) beyond center of valley, weaving intersecting shingle-strip courses over each other. Use one-piece shingle strips without joints in valley.

H. Closed-Cut Valleys: Extend asphalt shingle strips from one side of valley 12 inches (300 mm) beyond center of valley. Use one-piece shingle strips without joints in valley. Fasten with extra nail in upper end of shingle. Install asphalt shingle courses from other side of valley and cut back to a straight line 2 inches (50 mm) short of valley centerline. Trim upper concealed corners of cut-back shingle strips.

I. Open Valleys: Cut and fit asphalt shingles at open valleys, trimming upper concealed corners of shingle strips. Maintain uniform width of exposed open valley from highest to lowest point.

J. Ridge Vents: Install continuous ridge vents over asphalt shingles according to manufacturer's written instructions. Fasten with roofing nails of sufficient length to penetrate sheathing.

K. Ridge and Hip Cap Shingles: Maintain same exposure of cap shingles as roofing shingle exposure. Lap cap shingles at ridges to shed water away from direction of prevailing winds. Fasten with roofing nails of sufficient length to penetrate sheathing.

1. Fasten ridge cap asphalt shingles to cover ridge vent without obstructing airflow.

END OF SECTION 073113

SECTION 074113.16 - STANDING-SEAM METAL ROOF PANELS

PART 1 - GENERAL

0.1 SUMMARY

A. Section includes standing-seam metal roof panels.

0.2 PREINSTALLATION MEETINGS

A. Preinstallation Conference: Conduct conference at [**Project site**] <**Insert location**>.

0.3 ACTION SUBMITTALS

A. Product Data: For each type of product.

B. LEED Submittals:

1. Product Data for Credit MR 4: For products having recycled content, documentation indicating percentages by weight of postconsumer and preconsumer recycled content. Include statement indicating cost for each product having recycled content.
2. Product Test Reports for Credit SS 7.2: For roofing materials, documentation indicating that roofing materials comply with Solar Reflectance Index requirement.

C. Shop Drawings: Include fabrication and installation layouts of metal panels; details of edge conditions, joints, panel profiles, corners, anchorages, attachment system, trim, flashings, closures, and accessories; and special details.

D. Samples: For each type of metal panel indicated.

0.4 INFORMATIONAL SUBMITTALS

A. Product test reports.

B. Warranties: Sample of special warranties.

0.5 CLOSEOUT SUBMITTALS

A. Maintenance data.

0.6 QUALITY ASSURANCE

A. Installer Qualifications: An entity that employs installers and supervisors who are trained and approved by manufacturer.

B. UL-Certified, Portable Roll-Forming Equipment: UL-certified, portable roll-forming equipment capable of producing metal panels warranted by manufacturer to be the same as factory-formed products. Maintain UL certification of portable roll-forming equipment for duration of work.

0.7 WARRANTY

A. Special Warranty: Manufacturer's standard form in which manufacturer agrees to repair or replace components of metal panel systems that fail in materials or workmanship within specified warranty period.

1. Warranty Period: [**Two**] <**Insert number**> years from date of Substantial Completion.

B. Special Warranty on Panel Finishes: Manufacturer's standard form in which manufacturer agrees to repair finish or replace metal panels that show evidence of deterioration of factory-applied finishes within specified warranty period.

1. Finish Warranty Period: [**20**] [**10**] <**Insert number**> years from date of Substantial Completion.

C. Special Weathertightness Warranty: Manufacturer's standard form in which manufacturer agrees to repair or replace standing-seam metal roof panel assemblies that fail to remain weathertight, including leaks, within specified warranty period.

1. Warranty Period: [**20**] <**Insert number**> years from date of Substantial Completion.

PART 2 - PRODUCTS

0.1 PERFORMANCE REQUIREMENTS

A. Recycled Content of Steel Products: Postconsumer recycled content plus one-half of preconsumer recycled content not less than [**25**] <**Insert number**> percent.

B. Solar Reflectance Index: Not less than [**78**] [**29**] when calculated according to ASTM E 1980.

C. Energy Performance: Provide roof panels that are listed on the EPA/DOE's ENERGY STAR "Roof Product List" for [**low**] [**steep**]-slope roof products.

D. Energy Performance: Provide roof panels according to one of the following when tested according to CRRC-1:

1. Three-year, aged solar reflectance of not less than [**0.55**] <**Insert value**> and emissivity of not less than [**0.75**] <**Insert value**>.
2. Three-year, aged Solar Reflectance Index of not less than [**64**] <**Insert value**> when calculated according to ASTM E 1980.

E. Structural Performance: Provide metal panel systems capable of withstanding the effects of the following loads, based on testing according to ASTM E 1592:

1. Wind Loads: As indicated on Drawings.
2. Other Design Loads: [**As indicated on Drawings**] <**Insert loads**>.
3. Deflection Limits: For wind loads, no greater than [**1/180**] [**1/240**] <**Insert deflection**> of the span.
4. <**Insert serviceability requirements**>.

F. Air Infiltration: Air leakage of not more than 0.06 cfm/sq. ft. (0.3 L/s per sq. m) when tested according to ASTM E 1680[**or ASTM E 283**] at the following test-pressure difference:

1. Test-Pressure Difference: [**1.57 lbf/sq. ft. (75 Pa)**] [**6.24 lbf/sq. ft. (300 Pa)**].

G. Water Penetration under Static Pressure: No water penetration when tested according to ASTM E 1646[**or ASTM E 331**] at the following test-pressure difference:

1. Test-Pressure Difference: [**2.86 lbf/sq. ft. (137 Pa)**] [**6.24 lbf/sq. ft. (300 Pa)**].

H. Hydrostatic-Head Resistance: No water penetration when tested according to ASTM E 2140.

I. Wind-Uplift Resistance: Provide metal roof panel assemblies that comply with UL 580 for wind-uplift-resistance class indicated.

1. Uplift Rating: [**UL 30**] [**UL 60**] [**UL 90**].

J. FM Global Listing: Provide metal roof panels and component materials that comply with requirements in FM Global 4471 as part of a panel roofing system and that are listed in FM Global's "Approval Guide" for Class 1 or noncombustible construction, as applicable. Identify materials with FM Global markings.

1. Fire/Windstorm Classification: Class 1A-[**60**] [**75**] [**90**] [**105**] [**120**] <**Insert number**>.
2. Hail Resistance: [**MH**] [**SH**].

K. Thermal Movements: Allow for thermal movements from ambient and surface temperature changes by preventing buckling, opening of joints, overstressing of components, failure of joint sealants, failure of connections, and other detrimental effects. Base calculations on surface temperatures of materials due to both solar heat gain and nighttime-sky heat loss.

1. Temperature Change (Range): [**120 deg F (67 deg C), ambient; 180 deg F (100 deg C), material surfaces**] <**Insert temperature range**>.

0.2 STANDING-SEAM METAL ROOF PANELS

A. General: Provide factory-formed metal roof panels designed to be installed by lapping and interconnecting raised side edges of adjacent panels with joint type indicated and mechanically attaching panels to supports using concealed clips in side laps. Include clips, cleats, pressure plates, and accessories required for weathertight installation.

1. Steel Panel Systems: Unless more stringent requirements are indicated, comply with ASTM E 1514.
2. Aluminum Panel Systems: Unless more stringent requirements are indicated, comply with ASTM E 1637.

B. Vertical-Rib, Snap-Joint, Standing-Seam Metal Roof Panels <**Insert drawing designation**>: Formed with vertical ribs at panel edges and [**intermediate stiffening ribs symmetrically spaced**] [**a flat pan**] between ribs; designed for sequential installation by mechanically attaching panels to supports using concealed clips located under one side of panels, engaging opposite edge of adjacent panels, and snapping panels together.

1. Manufacturers: Subject to compliance with requirements, [**provide products by the following**] [**provide products by one of the following**] [**available manufacturers offering products that may be incorporated into the Work include, but are not limited to, the following**]:
2. Basis-of-Design Product: Subject to compliance with requirements, provide [**product indicated on Drawings**] <**Insert manufacturer's name; product name or designation**> or comparable product by one of the following:

   a. Advanced Architectural Products.
   b. AEP Span; a BlueScope Steel company.
   c. Architectural Building Components.
   d. Architectural Metal Systems; a Nucor company.
   e. CENTRIA Architectural Systems.
   f. Dimensional Metals, Inc.
   g. Englert, Inc.
   h. Fabral.
   i. Garland Company, Inc. (The)
   j. IMETCO.
   k. MBCI; a division of NCI Building Systems, L.P.
   l. McElroy Metal, Inc.
   m. Merchant & Evans.
   n. Metal-Fab Manufacturing, LLC.
   o. Metal Sales Manufacturing Corporation.
   p. Morin; a Kingspan Group company.
   q. Petersen Aluminum Corporation.
   r. Ryerson, Inc.
   s. Ultra Seam, Inc.
   t. Union Corrugating Company.
   u. VICWEST.
   v. <**Insert manufacturer's name**>.

3. Metallic-Coated Steel Sheet: Zinc-coated (galvanized) steel sheet complying with ASTM A 653/A 653M, G90 (Z275) coating designation, or aluminum-zinc alloy-coated steel sheet complying with ASTM A 792/A 792M, Class AZ50 (Class AZM150) coating designation; structural quality. Prepainted by the coil-coating process to comply with ASTM A 755/A 755M.

   a. Nominal Thickness: [**0.022 inch (0.56 mm)**] [**0.028 inch (0.71 mm)**] [**0.034 inch (0.86 mm)**] [**0.040 inch (1.02 mm)**] [**0.052 inch (1.32 mm)**].

b. Exterior Finish: [**Two-coat fluoropolymer**] [**Three-coat fluoropolymer**] [**Siliconized polyester**] <**Insert finish**>.
c. Color: [**As indicated by manufacturer's designations**] [**Match Architect's samples**] [**As selected by Architect from manufacturer's full range**] <**Insert color**>.

4. Aluminum Sheet: Coil-coated sheet, ASTM B 209 (ASTM B 209M), alloy as standard with manufacturer, with temper as required to suit forming operations and structural performance required.

a. Thickness: [**0.032 inch (0.81 mm)**] [**0.040 inch (1.02 mm)**].
b. Surface: [**Smooth, flat**] [**Embossed**] finish.
c. Exterior Finish: [**Two-coat fluoropolymer**] [**Three-coat fluoropolymer**] [**Siliconized polyester**] <**Insert finish**>.
d. Color: [**As indicated by manufacturer's designations**] [**Match Architect's samples**] [**As selected by Architect from manufacturer's full range**] <**Insert color**>.

5. Clips: [**One-piece fixed**] [**Two-piece floating**] to accommodate thermal movement.

a. Material: [**0.028-inch- (0.71-mm-)**] [**0.064-inch- (1.63-mm-)**] nominal thickness, zinc-coated (galvanized) or aluminum-zinc alloy-coated steel sheet.
b. Material: [**0.025-inch- (0.64-mm-)**] [**0.062-inch- (1.59-mm-)**] thick, stainless-steel sheet.

6. Panel Coverage: [**10 inches (254 mm)**] [**12 inches (305 mm)**] [**14 inches (356 mm)**] [**16 inches (406 mm)**] [**18 inches (457 mm)**] [**24 inches (610 mm)**] <**Insert dimension**>.
7. Panel Height: [**1.0 inch (25 mm)**] [**1.5 inches (38 mm)**] [**1.75 inches (44 mm)**] <**Insert dimension**>.

C. Vertical-Rib, Seamed-Joint, Standing-Seam Metal Roof Panels <**Insert drawing designation**>: Formed with vertical ribs at panel edges and [**intermediate stiffening ribs symmetrically spaced**] [**a flat pan**] between ribs; designed for sequential installation by mechanically attaching panels to supports using concealed clips located under one side of panels, engaging opposite edge of adjacent panels, and mechanically seaming panels together.

1. Manufacturers: Subject to compliance with requirements, [**provide products by the following**] [**provide products by one of the following**] [**available manufacturers offering products that may be incorporated into the Work include, but are not limited to, the following**]:
2. Basis-of-Design Product: Subject to compliance with requirements, provide [**product indicated on Drawings**] <**Insert manufacturer's name; product name or designation**> or comparable product by one of the following:

a. Advanced Architectural Products.
b. AEP Span; a BlueScope Steel company.
c. Architectural Building Components.
d. Architectural Metal Systems; a Nucor company.
e. ATAS International, Inc.
f. Berridge Manufacturing Company.
g. CENTRIA Architectural Systems.
h. Dimensional Metals, Inc.

i. Englert, Inc.
j. Fabral.
k. Firestone Metal Products, LLC.
l. Flexospan Steel Buildings, Inc.
m. Garland Company, Inc. (The)
n. IMETCO.
o. MBCI; a division of NCI Building Systems, L.P.
p. McElroy Metal, Inc.
q. Merchant & Evans.
r. Metal-Fab Manufacturing, LLC.
s. Metal Sales Manufacturing Corporation.
t. Morin; a Kingspan Group company.
u. Petersen Aluminum Corporation.
v. Ryerson, Inc.
w. Ultra Seam, Inc.
x. Union Corrugating Company.
y. <**Insert manufacturer's name**>.

3. Metallic-Coated Steel Sheet: Zinc-coated (galvanized) steel sheet complying with ASTM A 653/A 653M, G90 (Z275) coating designation, or aluminum-zinc alloy-coated steel sheet complying with ASTM A 792/A 792M, Class AZ50 (Class AZM150) coating designation; structural quality. Prepainted by the coil-coating process to comply with ASTM A 755/A 755M.

   a. Nominal Thickness: [**0.022 inch (0.56 mm)**] [**0.028 inch (0.71 mm)**] [**0.034 inch (0.86 mm)**] [**0.040 inch (1.02 mm)**] [**0.052 inch (1.32 mm)**].
   b. Exterior Finish: [**Two-coat fluoropolymer**] [**Three-coat fluoropolymer**] [**Siliconized polyester**] <**Insert finish**>.
   c. Color: [**As indicated by manufacturer's designations**] [**Match Architect's samples**] [**As selected by Architect from manufacturer's full range**] <**Insert color**>.

4. Aluminum Sheet: Coil-coated sheet, ASTM B 209 (ASTM B 209M), alloy as standard with manufacturer, with temper as required to suit forming operations and structural performance required.

   a. Thickness: [**0.032 inch (0.81 mm)**] [**0.040 inch (1.02 mm)**].
   b. Surface: [**Smooth, flat**] [**Embossed**] finish.
   c. Exterior Finish: [**Two-coat fluoropolymer**] [**Three-coat fluoropolymer**] [**Siliconized polyester**] <**Insert finish**>.
   d. Color: [**As indicated by manufacturer's designations**] [**Match Architect's samples**] [**As selected by Architect from manufacturer's full range**] <**Insert color**>.

5. Clips: [**One-piece fixed**] [**Two-piece floating**] to accommodate thermal movement.

a. Material: [**0.028-inch- (0.71-mm-)**] [**0.064-inch- (1.63-mm-)**] nominal thickness, zinc-coated (galvanized) or aluminum-zinc alloy-coated steel sheet.
b. Material: [**0.025-inch- (0.64-mm-)**] [**0.062-inch- (1.59-mm-)**] thick, stainless-steel sheet.

6. Joint Type: [**Single folded**] [**Double folded**] [**As standard with manufacturer**].
7. Panel Coverage: [**12 inches (305 mm)**] [**14 inches (356 mm)**] [**16 inches (406 mm)**] [**18 inches (457 mm)**] [**20 inches (508 mm)**] [**24 inches (610 mm)**] <**Insert dimension**>.
8. Panel Height: [**1.5 inches (38 mm)**] [**2.0 inches (51 mm)**] [**2.5 inches (64 mm)**] <**Insert dimension**>.

D. Trapezoidal-Rib, Snap-Joint, Standing-Seam Metal Roof Panels <**Insert drawing designation**>: Formed with raised trapezoidal ribs at panel edges and [**intermediate stiffening ribs symmetrically spaced**] [**a flat pan**] between ribs; designed for sequential installation by mechanically attaching panels to supports using concealed clips located under one side of panels, engaging opposite edge of adjacent panels, and snapping panels together.

1. Manufacturers: Subject to compliance with requirements, [**provide products by the following**] [**provide products by one of the following**] [**available manufacturers offering products that may be incorporated into the Work include, but are not limited to, the following**]:
2. Basis-of-Design Product: Subject to compliance with requirements, provide [**product indicated on Drawings**] <**Insert manufacturer's name; product name or designation**> or comparable product by one of the following:

a. AEP Span; a BlueScope Steel company.
b. MBCI; a division of NCI Building Systems, L.P.
c. McElroy Metal, Inc.
d. <**Insert manufacturer's name**>.

3. Metallic-Coated Steel Sheet: Zinc-coated (galvanized) steel sheet complying with ASTM A 653/A 653M, G90 (Z275) coating designation, or aluminum-zinc alloy-coated steel sheet complying with ASTM A 792/A 792M, Class AZ50 (Class AZM150) coating designation; structural quality. Prepainted by the coil-coating process to comply with ASTM A 755/A 755M.

a. Nominal Thickness: [**0.022 inch (0.56 mm)**] [**0.028 inch (0.71 mm)**] [**0.034 inch (0.86 mm)**] [**0.040 inch (1.02 mm)**] [**0.052 inch (1.32 mm)**].
b. Exterior Finish: [**Two-coat fluoropolymer**] [**Three-coat fluoropolymer**] [**Siliconized polyester**] <**Insert finish**>.
c. Color: [**As indicated by manufacturer's designations**] [**Match Architect's samples**] [**As selected by Architect from manufacturer's full range**] <**Insert color**>.

4. Aluminum Sheet: Coil-coated sheet, ASTM B 209 (ASTM B 209M), alloy as standard with manufacturer, with temper as required to suit forming operations and structural performance required.

a. Thickness: [**0.032 inch (0.81 mm)**] [**0.040 inch (1.02 mm)**].
b. Surface: [**Smooth, flat**] [**Embossed**] finish.

c. Exterior Finish: [**Two-coat fluoropolymer**] [**Three-coat fluoropolymer**] [**Siliconized polyester**] <**Insert finish**>.
d. Color: [**As indicated by manufacturer's designations**] [**Match Architect's samples**] [**As selected by Architect from manufacturer's full range**] <**Insert color**>.

5. Clips: [**One-piece fixed**] [**Two-piece floating**] to accommodate thermal movement.

a. Material: [**0.028-inch- (0.71-mm-)**] [**0.064-inch- (1.63-mm-)**] nominal thickness, zinc-coated (galvanized) or aluminum-zinc alloy-coated steel sheet.
b. Material: [**0.025-inch- (0.64-mm-)**] [**0.062-inch- (1.59-mm-)**] thick, stainless-steel sheet.

6. Panel Coverage: [**12 inches (305 mm)**] [**18 inches (457 mm)**] [**24 inches (610 mm)**] <**Insert dimension**>.
7. Panel Height: [**3 inches (76 mm)**] <**Insert dimension**>.

E. Trapezoidal-Rib, Seamed-Joint, Standing-Seam Metal Roof Panels <**Insert drawing designation**>: Formed with raised trapezoidal ribs at panel edges and [**intermediate stiffening ribs symmetrically spaced**] [**a flat pan**] between ribs; designed for sequential installation by mechanically attaching panels to supports using concealed clips located under one side of panels, engaging opposite edge of adjacent panels, and mechanically seaming panels together.

1. Manufacturers: Subject to compliance with requirements, [**provide products by the following**] [**provide products by one of the following**] [**available manufacturers offering products that may be incorporated into the Work include, but are not limited to, the following**]:
2. Basis-of-Design Product: Subject to compliance with requirements, provide [**product indicated on Drawings**] <**Insert manufacturer's name; product name or designation**> or comparable product by one of the following:

a. Butler Manufacturing; a BlueScope Steel company.
b. MBCI; a division of NCI Building Systems, L.P.
c. Metal Sales Manufacturing Corporation.
d. Morin; a Kingspan Group company.
e. VICWEST.
f. <**Insert manufacturer's name**>.

3. Metallic-Coated Steel Sheet: Zinc-coated (galvanized) steel sheet complying with ASTM A 653/A 653M, G90 (Z275) coating designation, or aluminum-zinc alloy-coated steel sheet complying with ASTM A 792/A 792M, Class AZ50 (Class AZM150) coating designation; structural quality. Prepainted by the coil-coating process to comply with ASTM A 755/A 755M.

a. Nominal Thickness: [**0.022 inch (0.56 mm)**] [**0.028 inch (0.71 mm)**] [**0.034 inch (0.86 mm)**] [**0.040 inch (1.02 mm)**] [**0.052 inch (1.32 mm)**].
b. Exterior Finish: [**Two-coat fluoropolymer**] [**Three-coat fluoropolymer**] [**Siliconized polyester**] <**Insert finish**>.

c. Color: [**As indicated by manufacturer's designations**] [**Match Architect's samples**] [**As selected by Architect from manufacturer's full range**] <**Insert color**>.

4. Aluminum Sheet: Coil-coated sheet, ASTM B 209 (ASTM B 209M), alloy as standard with manufacturer, with temper as required to suit forming operations and structural performance required.

   a. Thickness: [**0.032 inch (0.81 mm)**] [**0.040 inch (1.02 mm)**].
   b. Surface: [**Smooth, flat**] [**Embossed**] finish.
   c. Exterior Finish: [**Two-coat fluoropolymer**] [**Three-coat fluoropolymer**] [**Siliconized polyester**] <**Insert finish**>.
   d. Color: [**As indicated by manufacturer's designations**] [**Match Architect's samples**] [**As selected by Architect from manufacturer's full range**] <**Insert color**>.

5. Clips: [**One-piece fixed**] [**Two-piece floating**] to accommodate thermal movement.

   a. Material: [**0.028-inch- (0.71-mm-)**] [**0.064-inch- (1.63-mm-)**] nominal thickness, zinc-coated (galvanized) or aluminum-zinc alloy-coated steel sheet.
   b. Material: [**0.025-inch- (0.64-mm-)**] [**0.062-inch- (1.59-mm-)**] thick, stainless-steel sheet.

6. Joint Type: [**Single folded**] [**Double folded**] [**As standard with manufacturer**].
7. Panel Coverage: [**12 inches (305 mm)**] [**18 inches (457 mm)**] [**24 inches (610 mm)**] <**Insert dimension**>.
8. Panel Height: [**2.7 inches (69 mm)**] [**3.0 inches (76 mm)**] <**Insert dimension**>.

0.3 UNDERLAYMENT MATERIALS

A. Self-Adhering, High-Temperature Underlayment: Provide self-adhering, cold-applied, sheet underlayment, a minimum of 30 mils (0.76 mm) thick, consisting of slip-resistant, polyethylene-film top surface laminated to a layer of butyl or SBS-modified asphalt adhesive, with release-paper backing. Provide primer when recommended by underlayment manufacturer.

   1. Thermal Stability: Stable after testing at 240 deg F (116 deg C); ASTM D 1970.
   2. Low-Temperature Flexibility: Passes after testing at minus 20 deg F (29 deg C); ASTM D 1970.
   3. Products: Subject to compliance with requirements, [**provide the following**] [**provide one of the following**] [**available products that may be incorporated into the Work include, but are not limited to, the following**]:

      a. Carlisle Residential, a division of Carlisle Construction Materials; WIP 300HT.
      b. Grace Construction Products, a unit of W. R. Grace & Co.; [**Grace Ice and Water Shield HT**] [**Ultra**].
      c. Henry Company; Blueskin PE200 HT.
      d. Kirsch Building Products, LLC; Sharkskin Ultra SA.
      e. Metal-Fab Manufacturing, LLC; MetShield.
      f. Owens Corning; WeatherLock Metal High Temperature Underlayment.

g. <**Insert manufacturer's name; product name or designation**>.

B. Felt Underlayment: ASTM D 226/D 22M, Type II (No. 30), asphalt-saturated organic felts.

C. Slip Sheet: Manufacturer's recommended slip sheet, of type required for application.

0.4 MISCELLANEOUS MATERIALS

A. Miscellaneous Metal Subframing and Furring: ASTM C 645; cold-formed, metallic-coated steel sheet, ASTM A 653/A 653M, G90 (Z275 hot-dip galvanized) coating designation or ASTM A 792/A 792M, Class AZ50 (Class AZM150) coating designation unless otherwise indicated. Provide manufacturer's standard sections as required for support and alignment of metal panel system.

B. Panel Accessories: Provide components required for a complete, weathertight panel system including trim, copings, fasciae, mullions, sills, corner units, clips, flashings, sealants, gaskets, fillers, closure strips, and similar items. Match material and finish of metal panels unless otherwise indicated.

1. Closures: Provide closures at eaves and ridges, fabricated of same metal as metal panels.
2. Backing Plates: Provide metal backing plates at panel end splices, fabricated from material recommended by manufacturer.
3. Closure Strips: Closed-cell, expanded, cellular, rubber or crosslinked, polyolefin-foam or closed-cell laminated polyethylene; minimum 1-inch- (25-mm-) thick, flexible closure strips; cut or premolded to match metal panel profile. Provide closure strips where indicated or necessary to ensure weathertight construction.

C. Flashing and Trim: Provide flashing and trim formed from same material as metal panels as required to seal against weather and to provide finished appearance. Locations include, but are not limited to, eaves, rakes, corners, bases, framed openings, ridges, fasciae, and fillers. Finish flashing and trim with same finish system as adjacent metal panels.

D. Gutters and Downspouts: Formed from same material as roof panels according to SMACNA's "Architectural Sheet Metal Manual." Finish to match [**metal roof panels**] [**roof fascia and rake trim**].

E. Roof Curbs: Fabricated from same material as roof panels, [**0.048-inch (1.2-mm)**] <**Insert dimension**> nominal thickness; with bottom of skirt profiled to match roof panel profiles and with welded top box and integral full-length cricket. Fabricate curb subframing of 0.060-inch- (1.52-mm-) nominal thickness, angle-, C-, or Z-shaped steel sheet. Fabricate curb and subframing to withstand indicated loads of size and height indicated. Finish roof curbs to match metal roof panels.

F. Panel Fasteners: Self-tapping screws designed to withstand design loads.

G. Panel Sealants: Provide sealant type recommended by manufacturer that are compatible with panel materials, are nonstaining, and do not damage panel finish.

1. Sealant Tape: Pressure-sensitive, 100 percent solids, gray polyisobutylene compound sealant tape with release-paper backing; 1/2 inch (13 mm) wide and 1/8 inch (3 mm) thick.
2. Joint Sealant: ASTM C 920; as recommended in writing by metal panel manufacturer.
3. Butyl-Rubber-Based, Solvent-Release Sealant: ASTM C 1311.

0.5 FABRICATION

A. General: Fabricate and finish metal panels and accessories at the factory, by manufacturer's standard procedures and processes, as necessary to fulfill indicated performance requirements demonstrated by laboratory testing. Comply with indicated profiles and with dimensional and structural requirements.

B. On-Site Fabrication: Subject to compliance with requirements of this Section, metal panels may be fabricated on-site using UL-certified, portable roll-forming equipment if panels are of same profile and warranted by manufacturer to be equal to factory-formed panels. Fabricate according to equipment manufacturer's written instructions and to comply with details shown.

C. Provide panel profile, including major ribs and intermediate stiffening ribs, if any, for full length of panel.

D. Fabricate metal panel joints with factory-installed captive gaskets or separator strips that provide a weathertight seal and prevent metal-to-metal contact, and that minimize noise from movements.

E. Sheet Metal Flashing and Trim: Fabricate flashing and trim to comply with manufacturer's recommendations and recommendations in SMACNA's "Architectural Sheet Metal Manual" that apply to design, dimensions, metal, and other characteristics of item indicated.

0.6 FINISHES

A. Panels and Accessories:

1. Two-Coat Fluoropolymer: [**AAMA 621**] [**AAMA 620**]. Fluoropolymer finish containing not less than 70 percent PVDF resin by weight in color coat.
2. Three-Coat Fluoropolymer: [**AAMA 621**] [**AAMA 620**]. Fluoropolymer finish containing not less than 70 percent PVDF resin by weight in both color coat and clear topcoat.
3. Siliconized Polyester: Epoxy primer and silicone-modified, polyester-enamel topcoat; with a dry film thickness of not less than 0.2 mil (0.005 mm) for primer and 0.8 mil (0.02 mm) for topcoat.
4. Concealed Finish: White or light-colored acrylic or polyester backer finish.

PART 3 - EXECUTION

0.1 PREPARATION

A. Miscellaneous Supports: Install subframing, furring, and other miscellaneous panel support members and anchorages according to ASTM C 754 and metal panel manufacturer's written recommendations.

0.2 UNDERLAYMENT INSTALLATION

A. Self-Adhering Sheet Underlayment: Apply primer if required by manufacturer. Comply with temperature restrictions of underlayment manufacturer for installation. Apply at locations indicated [**below**] [**on Drawings**], wrinkle free, in shingle fashion to shed water, and with end laps of not less than 6 inches (152 mm) staggered 24 inches (610 mm) between courses. Overlap side edges not less than 3-1/2 inches (90 mm).[**Extend underlayment into gutter trough.**] Roll laps with roller. Cover underlayment within 14 days.

1. Apply over the entire roof surface.
2. Apply over the roof area indicated below:

   a. Roof perimeter for a distance up from eaves of [**24 inches (610 mm)**] [**36 inches (914 mm)**] <**Insert dimension**> beyond interior wall line.
   b. Valleys, from lowest point to highest point, for a distance on each side of [**18 inches (460 mm)**] <**Insert dimension**>. Overlap ends of sheets not less than 6 inches (152 mm).
   c. Rake edges for a distance of [**18 inches (460 mm)**] <**Insert dimension**>.
   d. Hips and ridges for a distance on each side of [**12 inches (305 mm)**] <**Insert dimension**>.
   e. Roof-to-wall intersections for a distance from wall of [**18 inches (460 mm)**] <**Insert dimension**>.
   f. Around dormers, chimneys, skylights, and other penetrating elements for a distance from element of [**18 inches (460 mm)**] <**Insert dimension**>.

B. Felt Underlayment: Apply at locations indicated [**below**] [**on Drawings**], in shingle fashion to shed water, and with lapped joints of not less than 2 inches (50 mm).

1. Apply over the entire roof surface.
2. Apply on roof not covered by self-adhering sheet underlayment. Lap over edges of self-adhering sheet underlayment not less than 3 inches (75 mm), in shingle fashion to shed water.

C. Slip Sheet: Apply slip sheet over underlayment before installing metal roof panels.

D. Flashings: Install flashings to cover underlayment to comply with requirements specified in Section 076200 "Sheet Metal Flashing and Trim."

0.3 METAL PANEL INSTALLATION

A. Standing-Seam Metal Roof Panel Installation: Fasten metal roof panels to supports with concealed clips at each standing-seam joint at location, spacing, and with fasteners recommended in writing by manufacturer.

1. Install clips to supports with self-tapping fasteners.

2. Install pressure plates at locations indicated in manufacturer's written installation instructions.
3. Snap Joint: Nest standing seams and fasten together by interlocking and completely engaging factory-applied sealant.
4. Seamed Joint: Crimp standing seams with manufacturer-approved, motorized seamer tool so clip, metal roof panel, and factory-applied sealant are completely engaged.
5. Watertight Installation:

    a. Apply a continuous ribbon of sealant or tape to seal joints of metal panels, using sealant or tape as recommend in writing by manufacturer as needed to make panels watertight.
    b. Provide sealant or tape between panels and protruding equipment, vents, and accessories.
    c. At panel splices, nest panels with minimum 6-inch (152-mm) end lap, sealed with sealant and fastened together by interlocking clamping plates.

B. Accessory Installation: Install accessories with positive anchorage to building and weathertight mounting, and provide for thermal expansion. Coordinate installation with flashings and other components.

C. Flashing and Trim: Comply with performance requirements, manufacturer's written installation instructions, and SMACNA's "Architectural Sheet Metal Manual." Provide concealed fasteners where possible, and set units true to line and level as indicated. Install work with laps, joints, and seams that will be permanently watertight and weather resistant.

0.4 CLEANING AND PROTECTION

A. Remove temporary protective coverings and strippable films, if any, as metal panels are installed, unless otherwise indicated in manufacturer's written installation instructions. On completion of metal panel installation, clean finished surfaces as recommended by metal panel manufacturer. Maintain in a clean condition during construction.

END OF SECTION 074113.16

SECTION 07 4646 - FIBER-CEMENT SIDING

PART 1 - GENERAL

1.1 SUMMARY

A. Section includes fiber-cement siding .

1.2 ACTION SUBMITTALS

A. Product Data: For each type of product.

B. Samples: For fiber-cement siding including related accessories.

1.3 INFORMATIONAL SUBMITTALS

A. Product certificates.

B. Product test reports.

C. Research/evaluation reports.

D. Sample warranty.

1.4 CLOSEOUT SUBMITTALS

A. Maintenance data.

1.5 QUALITY ASSURANCE

A. Mockups: Build mockups to verify selections made under Sample submittals and to demonstrate aesthetic effects and to set quality standards for fabrication and installation.

1. Build mockup of typical wall area as shown on Drawings.
2. Subject to compliance with requirements, approved mockups may become part of the completed Work if undisturbed at time of Substantial Completion.

1.6 WARRANTY

A. Special Warranty: Manufacturer agrees to repair or replace products that fail in materials or workmanship within specified warranty period.

1. Warranty Period: [**25**] years from date of Substantial Completion.

PART 2 - PRODUCTS

2.1 FIBER-CEMENT SIDING

A. General: ASTM C 1186, Type A, Grade II, fiber-cement board, noncombustible when tested according to ASTM E 136; with a flame-spread index of 25 or less when tested according to ASTM E 84.

1. Manufacturers: Subject to compliance with requirements, available manufacturers offering products that may be incorporated into the Work include, but are not limited to, the following:
2. Basis-of-Design Product: Subject to compliance with requirements, provide or comparable product by one of the following:
   a. CertainTeed Corporation.
   b. GAF Materials Corporation.
   c. James Hardie Building Products, Inc.
   d. James Hardie Siding Products.
   e. MaxiTile, Inc.
   f. Nichiha Fiber Cement.
   g. Norandex; Building Materials Distribution, Inc.

B. Labeling: Provide fiber-cement siding that is tested and labeled according to ASTM C 1186 by a qualified testing agency acceptable to authorities having jurisdiction.

C. Nominal Thickness: Not less than 5/16 inch.

D. Horizontal Pattern: Boards 7-1/2 inches wide in plain style.

1. Texture: Smooth.

E. Panel Texture: 48-inch- wide sheets with smooth texture.

F. Factory Priming: Manufacturer's standard acrylic primer.

2.2 ACCESSORIES

A. Siding Accessories, General: Provide starter strips, edge trim, outside and inside corner caps, and other items as recommended by siding manufacturer for building configuration.

B. Flashing: Provide flashing complying with Section 07 6200 "Sheet Metal Flashing and Trim" at window and door heads and where indicated.

C. Fasteners:

1. For fastening to wood, use siding nails of sufficient length to penetrate a minimum of 1 inch into substrate.
2. For fastening to metal, use ribbed bugle-head screws of sufficient length to penetrate a minimum of 1/4 inch, or three screw-threads, into substrate.
3. For fastening fiber cement, use hot-dip galvanized fasteners.

PART 3 - EXECUTION

3.1 INSTALLATION

A. General: Comply with manufacturer's written installation instructions applicable to products and applications indicated unless more stringent requirements apply.

1. Install fasteners no more than 24 inches o.c. or per structural attachment schedule.

B. Install joint sealants as specified in Section 07 9200 "Joint Sealants" and to produce a weathertight installation.

3.2 ADJUSTING AND CLEANING

A. Remove damaged, improperly installed, or otherwise defective materials and replace with new materials complying with specified requirements.

B. Clean finished surfaces according to manufacturer's written instructions and maintain in a clean condition during construction.

END OF SECTION 07 4646

SECTION 07 6200 - SHEET METAL FLASHING AND TRIM

PART 1 - GENERAL

1.1 SUMMARY

A. Section Includes:

1. Manufactured reglets [**with counterflashing**].
2. Formed roof-drainage sheet metal fabrications.
3. Formed low-slope roof sheet metal fabrications.
4. Formed steep-slope roof sheet metal fabrications.

1.2 PREINSTALLATION MEETINGS

A. Preinstallation Conference: Conduct conference at [**Project site**] .

1.3 ACTION SUBMITTALS

A. Product Data: For each type of product.

B. Shop Drawings: For sheet metal flashing and trim.

1. Include plans, elevations, sections, and attachment details.
2. Distinguish between shop- and field-assembled work.
3. Include identification of finish for each item.
4. Include pattern of seams and details of termination points, expansion joints and expansion-joint covers, direction of expansion, roof-penetration flashing, and connections to adjoining work.

C. Samples: For each exposed product and for each color and texture specified .

1.4 INFORMATIONAL SUBMITTALS

A. Product certificates.

B. Product test reports.

C. Sample warranty.

1.5 CLOSEOUT SUBMITTALS

A. Maintenance data.

1.6 QUALITY ASSURANCE

A. Fabricator Qualifications: Employs skilled workers who custom fabricate sheet metal flashing and trim similar to that required for this Project and whose products have a record of successful in-service performance.

1. For copings and roof edge flashings that are SPRI ES-1 tested, shop shall be listed as able to fabricate required details as tested and approved.

B. Mockups: Build mockups to verify selections made under Sample submittals to demonstrate aesthetic effects and to set quality standards for fabrication and installation.

1. Build mockup of typical roof edge, including apron flashing approximately 10 feet long.

1.7 WARRANTY

A. Special Warranty on Finishes: Manufacturer agrees to repair finish or replace sheet metal flashing and trim that shows evidence of deterioration of factory-applied finishes within specified warranty period.

1. Finish Warranty Period: [**20**] years from date of Substantial Completion.

PART 2 - PRODUCTS

2.1 PERFORMANCE REQUIREMENTS

A. General: Sheet metal flashing and trim assemblies, including cleats, anchors, and fasteners, shall withstand wind loads, structural movement, thermally induced movement, and exposure to weather without failure due to defective manufacture, fabrication, installation, or other defects in construction. Completed sheet metal flashing and trim shall not rattle, leak, or loosen, and shall remain watertight.

B. Sheet Metal Standard for Flashing and Trim: Comply with [**NRCA's "The NRCA Roofing Manual: Architectural Metal Flashing, Condensation and Air Leakage Control, and Reroofing"**] requirements for dimensions and profiles shown unless more stringent requirements are indicated.

C. Sheet Metal Standard for Copper: Comply with CDA's "Copper in Architecture Handbook." Conform to dimensions and profiles shown unless more stringent requirements are indicated.

D. Thermal Movements: Allow for thermal movements from ambient and surface temperature changes.

1. Temperature Change: [**120 deg F , ambient; 180 deg F , material surfaces**] .

2.2 SHEET METALS

A. General: Protect mechanical and other finishes on exposed surfaces from damage by applying strippable, temporary protective film before shipping.

B. Aluminum Sheet: ASTM B209, alloy as standard with manufacturer for finish required, with temper as required to suit forming operations and performance required .

1. As-Milled Finish: [**Standard one-side bright**] [**Standard two-side bright**].
2. Alclad Finish: Metallurgically bonded surfacing alloy on both sides, forming aluminum sheet with reflective luster.
3. Factory Prime Coating: Where painting after installation is required, pretreat metal with white or light-colored, factory-applied, baked-on epoxy primer coat; minimum dry film thickness of 0.2 mil.
4. Clear Anodic Finish, Coil Coated: AAMA 611, AA-M12C22A41, Class I, 0.018 mm or thicker.
5. Color Anodic Finish, Coil Coated: AAMA 611, AA-M12C22A42/A44, Class I, 0.018 mm or thicker.
   a. Color: [**As selected by Architect from full range of industry colors and color densities**] .

2.3 UNDERLAYMENT MATERIALS

A. Felt: ASTM D226/D226M, Type II (No. 30), asphalt-saturated organic felt; nonperforated.

B. Synthetic Underlayment: Laminated or reinforced, woven polyethylene or polypropylene, synthetic roofing underlayment; bitumen free; slip resistant; suitable for high temperatures over 220 deg F; and complying with physical requirements of ASTM D226/D226M for Type I and Type II felts.

1. Products: Subject to compliance with requirements, available products that may be incorporated into the Work include, but are not limited to, the following:
   a. Atlas Roofing Corporation; Summit.
   b. Engineered Coated Products; Nova-Seal II.
   c. Kirsch Building Products, LLC; [Sharkskin Comp] [Sharkskin Ultra].
   d. SDP Advanced Polymer Products Inc; Palisade.

C. Self-Adhering, High-Temperature Sheet Underlayment: Minimum 30 mils thick, consisting of a slip-resistant polyethylene- or polypropylene-film top surface laminated to a layer of butyl- or SBS-modified asphalt adhesive, with release-paper backing; specifically designed to withstand high metal temperatures beneath metal roofing. Provide primer in accordance with underlayment manufacturer's written instructions.

1. Products: Subject to compliance with requirements, available products that may be incorporated into the Work include, but are not limited to, the following:
   a. Carlisle Residential, a division of Carlisle Construction Materials; WIP 300HT.
   b. Grace Construction Products, a unit of W. R. Grace & Co.-Conn.; [Grace Ice and Water Shield HT] [Ultra].
   c. Henry Company; Blueskin PE200 HT.
   d. Kirsch Building Products, LLC; Sharkskin Ultra SA.

e. Metal-Fab Manufacturing, LLC; MetShield.
f. Owens Corning; WeatherLock Specialty Tile & Metal Underlayment.
g. Polyguard Products, Inc.; Deck Guard HT.
h. Protecto Wrap Company; Protecto Jiffy Seal Ice & Water Guard HT.
i. SDP Advanced Polymer Products Inc; Palisade SA-HT.

2. Thermal Stability: ASTM D 1970; stable after testing at 240 deg F (116 deg C) or higher.

D. Slip Sheet: Rosin-sized building paper, 3 lb/100 sq. ft. minimum.

2.4 MISCELLANEOUS MATERIALS

A. General: Provide materials and types of fasteners [**, solder**], protective coatings, sealants, and other miscellaneous items as required for complete sheet metal flashing and trim installation and as recommended by manufacturer of primary sheet metal unless otherwise indicated.

B. Fasteners: Wood screws, annular threaded nails, self-tapping screws, self-locking rivets and bolts, and other suitable fasteners designed to withstand design loads and recommended by manufacturer of primary sheet metal.

1. General: Blind fasteners or self-drilling screws, gasketed, with hex-washer head.
   a. Exposed Fasteners: Heads matching color of sheet metal using plastic caps or factory-applied coating. Provide metal-backed EPDM or PVC sealing washers under heads of exposed fasteners bearing on weather side of metal.
   b. Blind Fasteners: High-strength aluminum or stainless steel rivets suitable for metal being fastened.
   c. Spikes and Ferrules: Same material as gutter; with spike with ferrule matching internal gutter width.
2. Fasteners for Copper Sheet: Copper, hardware bronze or passivated Series 300 stainless steel.
3. Fasteners for Aluminum Sheet: Aluminum or Series 300 stainless steel.
4. Fasteners for Stainless Steel Sheet: Series 300 stainless steel.
5. Fasteners for [**Aluminum-Zinc Alloy-Coated**] Steel Sheet: Series 300 stainless steel or hot-dip galvanized steel in accordance with ASTM A153/A153M or ASTM F2329.

C. Sealant Tape: Pressure-sensitive, 100 percent solids, polyisobutylene compound sealant tape with release-paper backing. Provide permanently elastic, nonsag, nontoxic, nonstaining tape 1/2 inch wide and 1/8 inch thick.

D. Elastomeric Sealant: ASTM C920, elastomeric [**polyurethane**] polymer sealant; of type, grade, class, and use classifications required to seal joints in sheet metal flashing and trim and remain watertight.

E. Butyl Sealant: ASTM C1311, single-component, solvent-release butyl rubber sealant; polyisobutylene plasticized; heavy bodied for hooked-type expansion joints with limited movement.

F. Epoxy Seam Sealer: Two-part, noncorrosive, aluminum seam-cementing compound, recommended by aluminum manufacturer for exterior nonmoving joints, including riveted joints.

G. Bituminous Coating: Cold-applied asphalt emulsion in accordance with ASTM D1187/D1187M.

H. Asphalt Roofing Cement: ASTM D4586, asbestos free, of consistency required for application.

I. Reglets: Units of type, material, and profile required, formed to provide secure interlocking of separate reglet and counterflashing pieces, and compatible with flashing indicated [**with factory-mitered and -welded corners and junctions**] [**and**] [**with interlocking counterflashing on exterior face, of same metal as reglet**].

2.5 MANUFACTURED REGLETS

A. Manufacturers: Subject to compliance with requirements,available manufacturers offering products that may be incorporated into the Work include, but are not limited to, the following:

2.6 FABRICATION, GENERAL

A. General: Custom fabricate sheet metal flashing and trim to comply with details shown and recommendations in cited sheet metal standard that apply to design, dimensions, geometry, metal thickness, and other characteristics of item required. Fabricate sheet metal flashing and trim in shop to greatest extent possible.

1. Obtain field measurements for accurate fit before shop fabrication.
2. Form sheet metal flashing and trim to fit substrates without excessive oil canning, buckling, and tool marks; true to line, levels, and slopes; and with exposed edges folded back to form hems.
3. Conceal fasteners and expansion provisions where possible. Do not use exposed fasteners on faces exposed to view.

B. Expansion Provisions: Form metal for thermal expansion of exposed flashing and trim.

1. Form expansion joints of intermeshing hooked flanges, not less than 1 inch (25 mm) deep, filled with butyl sealant concealed within joints.
2. Use lapped expansion joints only where indicated on Drawings.

C. Sealant Joints: Where movable, nonexpansion-type joints are required, form metal to provide for proper installation of elastomeric sealant according to cited sheet metal standard.

D. Fabricate cleats and attachment devices from same material as accessory being anchored or from compatible, noncorrosive metal.

E. Fabricate cleats and attachment devices of sizes as recommended by cited sheet metal standard for application, but not less than thickness of metal being secured.

F. Seams: Fabricate nonmoving seams with flat-lock seams. Tin edges to be seamed, form seams, and solder.

G. Seams: Fabricate nonmoving seams with flat-lock seams. Form seams and seal with elastomeric sealant unless otherwise recommended by sealant manufacturer for intended use.

H. Seams for Aluminum: Fabricate nonmoving seams with flat-lock seams. Form seams and seal with epoxy seam sealer.

2.7 ROOF-DRAINAGE SHEET METAL FABRICATIONS

A. Hanging Gutters:

1. Fabricate to cross section required, complete with end pieces, outlet tubes, and other accessories as required.
2. Fabricate in minimum 96-inch- long sections.
3. Furnish flat-stock gutter brackets and gutter spacers and straps fabricated from same metal as gutters, of size recommended by cited sheet metal standard, but with thickness not less than [**twice the gutter thickness**] .
4. Fabricate expansion joints, expansion-joint covers, and gutter accessories from same metal as gutters. [**Shop fabricate interior and exterior corners.**]
5. Accessories: [**Continuous, removable leaf screen with sheet metal frame and hardware cloth screen**] .

B. Downspouts: Fabricate [**rectangular**] downspouts to dimensions indicated on Drawings, complete with mitered elbows. Furnish with metal hangers from [**same material as downspouts and anchors**] .

1. Fabricate from the following materials:
   a. Aluminum-Zinc Alloy-Coated Steel: [**0.022 inch**] thick.

PART 3 - EXECUTION

3.1 INSTALLATION OF UNDERLAYMENT

A. Felt Underlayment: Install felt underlayment, wrinkle free, using adhesive to minimize use of mechanical fasteners under sheet metal flashing and trim.

1. Install in shingle fashion to shed water.
2. Lap joints not less than 2 inches.

B. Synthetic Underlayment: Install synthetic underlayment, wrinkle free, in accordance with manufacturers' written instructions, and using adhesive where possible to minimize use of mechanical fasteners under sheet metal.

1. Lap horizontal joints not less than 4 inches.
2. Lap end joints not less than 12 inches.

C. Self-Adhering Sheet Underlayment:

1. Install self-adhering sheet underlayment; wrinkle free.
2. Prime substrate if recommended by underlayment manufacturer.
3. Comply with temperature restrictions of underlayment manufacturer for installation; use primer for installing underlayment at low temperatures.
4. Apply in shingle fashion to shed water, with end laps of not less than 6 inches staggered 24 inches between courses.
5. Overlap side edges not less than 3-1/2 inches. Roll laps and edges with roller.
6. Roll laps and edges with roller.

7. Cover underlayment within 14 days.

3.2 INSTALLATION, GENERAL

A. General: Anchor sheet metal flashing and trim and other components of the Work securely in place, with provisions for thermal and structural movement. Use fasteners, solder, protective coatings, separators, sealants, and other miscellaneous items as required to complete sheet metal flashing and trim system.

1. Install sheet metal flashing and trim true to line, levels, and slopes. Provide uniform, neat seams with minimum exposure of solder, welds, and sealant.
2. Install sheet metal flashing and trim to fit substrates and to result in watertight performance. Verify shapes and dimensions of surfaces to be covered before fabricating sheet metal.
3. Space cleats not more than 12 inches apart. Attach each cleat with at least two fasteners. Bend tabs over fasteners.
4. Install exposed sheet metal flashing and trim with limited oil canning, and free of buckling and tool marks.
5. Torch cutting of sheet metal flashing and trim is not permitted.

B. Metal Protection: Where dissimilar metals contact each other, or where metal contacts pressure-treated wood or other corrosive substrates, protect against galvanic action or corrosion by painting contact surfaces with bituminous coating or by other permanent separation as recommended by sheet metal manufacturer or cited sheet metal standard.

1. Coat concealed side of [**uncoated-aluminum**] [**and**] [**stainless steel**] sheet metal flashing and trim with bituminous coating where flashing and trim contact wood, ferrous metal, or cementitious construction.
2. Underlayment: Where installing sheet metal flashing and trim directly on cementitious or wood substrates, install underlayment and cover with slip sheet.

C. Expansion Provisions: Provide for thermal expansion of exposed flashing and trim.

1. Space movement joints at maximum of [**10 feet**] with no joints within 24 inches of corner or intersection.
2. Form expansion joints of intermeshing hooked flanges, not less than 1 inch deep, filled with sealant concealed within joints.
3. Use lapped expansion joints only where indicated on Drawings.

D. Fasteners: Use fastener sizes that penetrate [**wood blocking or sheathing not less than 1-1/4 inches for nails and not less than 3/4 inch for wood screws**] .

E. Conceal fasteners and expansion provisions where possible in exposed work and locate to minimize possibility of leakage. Cover and seal fasteners and anchors as required for a tight installation.

F. Seal joints as required for watertight construction.

1. Prepare joints and apply sealants to comply with requirements in Section 07 9200 "Joint Sealants."

G. Soldered Joints: Clean surfaces to be soldered, removing oils and foreign matter.

1. Pretin edges of sheets with solder to width of 1-1/2 inches; however, reduce pretinning where pretinned surface would show in completed Work.
2. Do not solder [**metallic-coated steel**] [**and**] [**aluminum**] sheet.
3. Do not pretin zinc-tin alloy-coated copper.
4. Do not use torches for soldering.
5. Heat surfaces to receive solder, and flow solder into joint.
   a. Fill joint completely.
   b. Completely remove flux and spatter from exposed surfaces.
6. Stainless Steel Soldering:
   a. Tin edges of uncoated sheets, using solder for stainless steel and acid flux.
   b. Promptly remove acid-flux residue from metal after tinning and soldering.
   c. Comply with solder manufacturer's recommended methods for cleaning and neutralization.
7. Copper Soldering: Tin edges of uncoated sheets, using solder for copper.

H. Rivets: Rivet joints in [**uncoated aluminum**] [**zinc**] where necessary for strength.

3.3 INSTALLATION OF ROOF-DRAINAGE SYSTEM

A. Install sheet metal roof-drainage items to produce complete roof-drainage system in accordance with cited sheet metal standard unless otherwise indicated. Coordinate installation of roof perimeter flashing with installation of roof-drainage system.

B. Hanging Gutters:

1. Join sections with [**joints sealed with sealant**].
2. Provide for thermal expansion.
3. Attach gutters at eave or fascia to firmly anchor them in position.
4. Provide end closures and seal watertight with sealant.
5. Slope to downspouts.
6. Install gutter with expansion joints at locations indicated on Drawings, but not exceeding, [**50 feet**] apart. Install expansion-joint caps.

C. Expansion-Joint Covers: Install expansion-joint covers at locations and of configuration indicated on Drawings. Lap joints minimum of 4 inches in direction of water flow.

3.4 INSTALLATION OF ROOF FLASHINGS

A. Install sheet metal flashing and trim to comply with performance requirements [**, sheet metal manufacturer's written installation instructions,**] and cited sheet metal standard.

1. Provide concealed fasteners where possible, and set units true to line, levels, and slopes.
2. Install work with laps, joints, and seams that are permanently watertight and weather resistant.

B. Roof Edge Flashing:

1. Install roof edge flashings in accordance with ANSI/SPRI/FM 4435/ES-1.
2. Anchor to resist uplift and outward forces in accordance with recommendations in cited sheet metal standard unless otherwise indicated. Interlock bottom edge of roof edge flashing with continuous cleat anchored to substrate at [**staggered 3-inch**] centers.
3. Anchor to resist uplift and outward forces in accordance with recommendations in FM Global Property Loss Prevention Data Sheet 1-49 for FM Approvals' listing for required windstorm classification.

C. Copings:

1. Install roof edge flashings in accordance with ANSI/SPRI/FM 4435/ES-1.
2. Anchor to resist uplift and outward forces in accordance with recommendations in cited sheet metal standard unless otherwise indicated.
3. Anchor to resist uplift and outward forces in accordance with recommendations in FM Global Property Loss Prevention Data Sheet 1-49 for specified FM Approvals' listing for required windstorm classification.

D. Pipe or Post Counterflashing: Install counterflashing umbrella with close-fitting collar with top edge flared for elastomeric sealant, extending minimum of 4 inches over base flashing. Install stainless steel draw band and tighten.

E. Counterflashing: Coordinate installation of counterflashing with installation of base flashing.

1. Insert counterflashing in reglets or receivers and fit tightly to base flashing.
2. Extend counterflashing 4 inches over base flashing.
3. Lap counterflashing joints minimum of 4 inches.

F. Roof-Penetration Flashing: Coordinate installation of roof-penetration flashing with installation of roofing and other items penetrating roof. Seal with [**elastomeric**] [**butyl**] sealant and clamp flashing to pipes that penetrate roof.

3.5 INSTALLATION OF WALL FLASHINGS

A. Install sheet metal wall flashing to intercept and exclude penetrating moisture in accordance with cited sheet metal standard unless otherwise indicated. Coordinate installation of wall flashing with installation of wall-opening components such as windows, doors, and louvers.

B. Through-Wall Flashing: Installation of through-wall flashing is specified in Section 04 2000 "Unit Masonry."

C. Opening Flashings in Frame Construction: Install continuous head, sill, and similar flashings to extend [**4 inches**] beyond wall openings.

D. Reglets: Installation of reglets is specified in [**Section 04 2000 "Unit Masonry."**]

3.6 INSTALLATION TOLERANCES

A. Installation Tolerances: Shim and align sheet metal flashing and trim within installed tolerance of 1/4 inch in 20 feet on slope and location lines indicated on Drawings and within 1/8-inch offset of adjoining faces and of alignment of matching profiles.

3.7 CLEANING

A. Clean exposed metal surfaces of substances that interfere with uniform oxidation and weathering.

B. Clean and neutralize flux materials. Clean off excess solder.

C. Clean off excess sealants.

3.8 PROTECTION

A. Remove temporary protective coverings and strippable films as sheet metal flashing and trim are installed unless otherwise indicated in manufacturer's written installation instructions.

B. Replace sheet metal flashing and trim that have been damaged or that have deteriorated beyond successful repair by finish touchup or similar minor repair procedures, as determined by Architect.

END OF SECTION 07 6200

SECTION 07 7200 - ROOF ACCESSORIES

PART 1 - GENERAL

1.1 SUMMARY

A. Section Includes:

1. Roof curbs.
2. Equipment supports.
3. Roof hatches.
4. Hatch-type heat and smoke vents.
5. Dropout-type heat and smoke vents.

1.2 ACTION SUBMITTALS

A. Product Data: For each type of roof accessory.

B. Shop Drawings: For roof accessories.

C. Samples: For each exposed product and for each color and texture specified.

1.3 INFORMATIONAL SUBMITTALS

A. Coordination Drawings: Roof plans, drawn to scale, and coordinating penetrations and roof-mounted items.

B. Sample warranties.

1.4 CLOSEOUT SUBMITTALS

A. Operation and maintenance data.

1.5 WARRANTY

A. Special Warranty on Painted Finishes: Manufacturer's standard form in which manufacturer agrees to repair finishes or replace roof accessories that show evidence of deterioration of factory-applied finishes within [**20**] years from date of Substantial Completion.

PART 2 - PRODUCTS

2.1 METAL MATERIALS

A. Zinc-Coated (Galvanized) Steel Sheet: ASTM A 653/A 653M, G90 coating designation.

1. Mill-Phosphatized Finish: Manufacturer's standard for field painting.
2. Factory Prime Coating: Where field painting is indicated, apply pretreatment and white or light-colored, factory-applied, baked-on epoxy primer coat, with a minimum dry film thickness of 0.2 mil
3. Exposed Coil-Coated Finish: Two-coat fluoropolymer finish; AAMA 621; system consisting of primer and fluoropolymer color topcoat containing not less than 70 percent PVDF resin by weight.
4. Baked-Enamel or Powder-Coat Finish: Manufacturer's standard two-coat, baked-on finish consisting of prime coat and thermosetting topcoat, with a minimum dry film thickness of 1 mil for topcoat.

B. Aluminum-Zinc Alloy-Coated Steel Sheet: ASTM A 792/A 792M, AZ50 coated.

1. Factory Prime Coating: Where field painting is indicated, apply pretreatment and white or light-colored, factory-applied, baked-on epoxy primer coat, with a minimum dry film thickness of 0.2 mil .
2. Exposed Coil-Coated Finish: Two-coat fluoropolymer finish; AAMA 621; system consisting of primer and fluoropolymer color topcoat containing not less than 70 percent PVDF resin by weight
3. Baked-Enamel or Powder-Coat Finish: Manufacturer's standard two-coat, baked-on finish consisting of prime coat and thermosetting topcoat, with a minimum dry film thickness of 1 mil for topcoat.

C. Aluminum Sheet: ASTM B 209 , manufacturer's standard alloy for finish required, with temper to suit forming operations and performance required.

1. Mill Finish: As manufactured.
2. Factory Prime Coating: Where field painting is indicated, apply pretreatment and white or light-colored, factory-applied, baked-on epoxy primer coat, with a minimum dry film thickness of 0.2 mil .
3. Clear Anodic Finish: AAMA 611, Class II, 0.010 mm or thicker.
4. Color Anodic Finish: AAMA 611, Class II, 0.010 mm or thicker.
5. Exposed Coil-Coated Finish: Two-coat fluoropolymer finish; AAMA 620; system consisting of primer and fluoropolymer color topcoat containing not less than 70 percent PVDF resin by weight.
6. Baked-Enamel or Powder-Coat Finish: AAMA 2603 except with a minimum dry film thickness of 1.5 mils.

D. Aluminum Extrusions and Tubes: ASTM B 221 , manufacturer's standard alloy and temper for type of use, finished to match assembly where used, otherwise mill finished.

E. Steel Shapes: ASTM A 36/A 36M, hot-dip galvanized according to ASTM A 123/A 123M unless otherwise indicated.

2.2 MISCELLANEOUS MATERIALS

A. General: Provide materials and types of fasteners, protective coatings, sealants, and other miscellaneous items required by manufacturer for a complete installation.

B. Wood Nailers: Softwood lumber, pressure treated with waterborne preservatives for aboveground use, acceptable to authorities having jurisdiction, containing no arsenic or chromium, and complying with AWPA C2; not less than 1-1/2 inches thick.

C. Fasteners: Roof accessory manufacturer's recommended fasteners suitable for application and metals being fastened. Match finish of exposed fasteners with finish of material being fastened. Provide nonremovable fastener heads to exterior exposed fasteners.

D. Sealants: As recommended by roof accessory manufacturer for installation indicated.

2.3 ROOF CURBS

A. Roof Curbs: Internally reinforced roof-curb units capable of supporting superimposed live and dead loads, including equipment loads and other construction indicated on Drawings, bearing continuously on roof structure, and capable of meeting performance requirements; with welded or mechanically fastened and sealed corner joints, [**integral metal cant,**] and integrally formed deck-mounting flange at perimeter bottom.

1. Manufacturers: Subject to compliance with requirements, available manufacturers offering products that may be incorporated into the Work include, but are not limited to, the following:
2. Basis-of-Design Product: Subject to compliance with requirements, provide comparable product by one of the following:
   a. AES Industries, Inc.
   b. Curbs Plus, Inc.
   c. Custom Solution Roof and Metal Products.
   d. Greenheck Fan Corporation.
   e. LM Curbs.
   f. Metallic Products Corp.
   g. Milcor Inc.; Commercial Products Group of Hart & Cooley, Inc.
   h. Pate Company (The).
   i. Roof Products, Inc.
   j. Safe Air of Illinois.
   k. Thybar Corporation.
   l. Vent Products Co., Inc.

B. Material: [**Aluminum-zinc alloy-coated**] steel sheet, [**0.052 inch (1.32 mm)**] thick.

1. Finish: [**Baked enamel or powder coat**] .
2. Color: [**As selected by Architect from manufacturer's full range**] .

C. Material: Aluminum sheet, [**0.090 inch (2.28 mm)**] thick.

1. Finish: [**Baked enamel or powder coat**] .
2. Color: [**As selected by Architect from manufacturer's full range**] .

D. Construction:

1. Insulation: Factory insulated with [**1-1/2-inch- (38-mm-)**] thick glass-fiber board insulation.
2. Liner: Same material as curb, of manufacturer's standard thickness and finish.
3. Nailer: Factory-installed wood nailer [**along top flange of curb**] , continuous around curb perimeter.
4. On ribbed or fluted metal roofs, form deck-mounting flange at perimeter bottom to conform to roof profile.
5. Fabricate curbs to minimum height of 12 inches (300 mm) unless otherwise indicated.
6. Top Surface: Level around perimeter with roof slope accommodated by sloping the deck-mounting flange.
7. Sloping Roofs: Where roof slope exceeds 1:48, fabricate curb with perimeter curb height tapered to accommodate roof slope so that top surface of perimeter curb is level. Equip unit with water diverter or cricket on side that obstructs water flow.
8. Security Grille: [**Provide where indicated**].

2.4 ROOF HATCHES

A. Roof Hatches: Metal roof-hatch units with lids and insulated [**single**] -walled curbs, welded or mechanically fastened and sealed corner joints, continuous lid-to-curb counterflashing and weathertight perimeter gasketing, [**integral metal cant,**] and integrally formed deck-mounting flange at perimeter bottom.

1. Manufacturers: Subject to compliance with requirements, available manufacturers offering products that may be incorporated into the Work include, but are not limited to, the following:
2. Basis-of-Design Product: Subject to compliance with requirements, provide comparable product by one of the following:
   a. AES Industries, Inc.
   b. Babcock-Davis.
   c. Bilco Company (The).
   d. Bristolite Skylights.
   e. Custom Solution Roof and Metal Products.
   f. Dur-Red Products.
   g. Hi Pro International, Inc.
   h. J. L. Industries, Inc.
   i. Metallic Products Corp.
   j. Milcor Inc.; Commercial Products Group of Hart & Cooley, Inc.
   k. Naturalite Skylight Systems; Vistawall Group (The).
   l. Nystrom.
   m. O'Keeffe's Inc.
   n. Pate Company (The).
   o. Precision Ladders, LLC.

B. Type and Size: Single-leaf lid, [**30 by 54 inches (750 by 1370 mm)**] .

C. Loads: Minimum 40-lbf/sq. ft. external live load and 20-lbf/sq. ft. internal uplift load.

D. Hatch Material: Aluminum-zinc alloy-coated] steel sheet, 0.079 inch thick.

1. Finish: Baked enamel or powder coat
2. Color: As selected by Architect from manufacturer's full range

E. Hatch Material: Aluminum sheet, 0.090 inch thick.

1. Finish: Baked enamel or powder coat
2. Color: As selected by Architect from manufacturer's full range.

F. Construction:

1. Insulation: Cellulosic-fiber board.
2. Hatch Lid: Opaque, insulated, and double walled, with manufacturer's standard metal liner of same material and finish as outer metal lid.
3. Hatch Lid: Glazed, insulated, and double walled, with manufacturer's standard metal liner of same material and finish as outer metal lid.
4. Curb Liner: Manufacturer's standard, of same material and finish as metal curb.
5. On ribbed or fluted metal roofs, form flange at perimeter bottom to conform to roof profile.
6. Fabricate curbs to minimum height of 12 inches unless otherwise indicated.
7. Sloping Roofs: Where slope or roof deck exceeds 1:48, fabricate curb with perimeter curb height that is tapered to accommodate roof slope so that top surfaces of perimeter curb are level. Equip hatch with water diverter or cricket on side that obstructs water flow.

G. Hardware: Galvanized-steel spring latch with turn handles, butt- or pintle-type hinge system, and padlock hasps inside and outside.

1. Provide two-point latch on lids larger than 84 inches .
2. Provide remote-control operation.

H. Safety Railing System: Roof-hatch manufacturer's standard system including rails, clamps, fasteners, safety barrier at railing opening, and accessories required for a complete installation; attached to roof hatch and complying with 29 CFR 1910.23 requirements and authorities having jurisdiction.

I. Ladder-Assist Post: Roof-hatch manufacturer's standard device for attachment to roof-access ladder. Post locks in place on full extension; release mechanism returns post to closed position

PART 3 - EXECUTION

3.1 INSTALLATION

A. Verify dimensions of roof openings for roof accessories. Install roof accessories according to manufacturer's written instructions.

1. Install roof accessories level; plumb; true to line and elevation; and without warping, jogs in alignment, buckling, or tool marks.
2. Anchor roof accessories securely in place so they are capable of resisting indicated loads.

3. Use fasteners, separators, sealants, and other miscellaneous items as required to complete installation of roof accessories and fit them to substrates.
4. Install roof accessories to resist exposure to weather without failing, rattling, leaking, or loosening of fasteners and seals.

B. Metal Protection: Protect metals against galvanic action by separating dissimilar metals from contact with each other or with corrosive substrates by painting contact surfaces with bituminous coating or by other permanent separation as recommended by manufacturer.

1. Coat concealed side of [**uncoated aluminum**] roof accessories with bituminous coating where in contact with wood, ferrous metal, or cementitious construction.
2. Underlayment: Where installing roof accessories directly on cementitious or wood substrates, install a course of underlayment and cover with manufacturer's recommended slip sheet.

C. Security Grilles: Weld bar intersections and [**, using tamper-resistant bolts, attach the**] ends of bars to structural frame or primary curb walls.

D. Seal joints with sealant as required by roof accessory manufacturer.

3.2 REPAIR AND CLEANING

A. Galvanized Surfaces: Clean field welds, bolted connections, and abraded areas and repair galvanizing according to ASTM A780/A780M.

B. Touch up factory-primed surfaces with compatible primer ready for field painting according to Section 09 9113 "Exterior Painting."

C. Clean exposed surfaces according to manufacturer's written instructions.

D. Replace roof accessories that have been damaged or that cannot be successfully repaired by finish touchup or similar minor repair procedures.

END OF SECTION 07 7200

SECTION 07 8400 - FIRESTOPPING

PART 1 - PART 1 - GENERAL

1.1 SECTION INCLUDES

A. Firestopping systems.

B. Firestopping of all joints and penetrations in fire-resistance rated and smoke-resistant assemblies, whether indicated on drawings or not, and other openings indicated.

1.2 SUBMITTALS

A. Schedule of Firestopping: List each type of penetration, fire rating of the penetrated assembly, and firestopping test or design number.

B. Product Data: Provide data on product characteristics, performance ratings, and limitations.

C. Manufacturer's Installation Instructions: Indicate preparation and installation instructions.

D. Manufacturer's Certificate: Certify that products meet or exceed specified requirements.

E. Certificate from authority having jurisdiction indicating approval of materials used.

F. Qualification statements for installing mechanics.

1.3 QUALITY ASSURANCE

A. Fire Testing: Provide firestopping assemblies of designs that provide the specified fire ratings when tested in accordance with methods indicated.

1. Listing in the current-year classification or certification books of UL, FM, or ITS (Warnock Hersey) will be considered as constituting an acceptable test report.
2. Valid evaluation report published by ICC Evaluation Service, Inc. (ICC-ES) at www.icc-es.org will be considered as constituting an acceptable test report.
3. Submission of actual test reports is required for assemblies for which none of the above substantiation exists.

B. Manufacturer Qualifications: Company specializing in manufacturing the products specified in this section with minimum three years documented experience.

C. Installer Qualifications: Company specializing in performing the work of this section and:

1. Approved by Factory Mutual Research under FM Standard 4991, Approval of Firestop Contractors, or meeting any two of the following requirements:.
2. With minimum 3 years documented experience installing work of this type.
3. Able to show at least 5 satisfactorily completed projects of comparable size and type.

4. Licensed by authority having jurisdiction.
5. Approved by firestopping manufacturer.

D. Installing Mechanic's Qualifications: Trained by firestopping manufacturer and able to provide evidence thereof.

1.4 FIELD CONDITIONS

A. Comply with firestopping manufacturer's recommendations for temperature and conditions during and after installation. Maintain minimum temperature before, during, and for 3 days after installation of materials.

PART 2 - PART 2 - PRODUCTS

2.1 FIRESTOPPING SYSTEMS

A. Firestopping: Any material meeting requirements.

B. Basis of Design: Products by Hilti, Inc.

2.2 MATERIALS

A. Firestopping Sealants: Provide only products having lower volatile organic compound (VOC) content than required by South Coast Air Quality Management District Rule No.1168.

B. Elastomeric Silicone Firestopping: Single component silicone elastomeric compound and compatible silicone sealant

1. Manufacturers:
   a. Hilti, Inc: www.us.hilti.com., Basis of Design.
   b. A/D Fire Protection Systems Inc: www.adfire.com.
   c. 3M Fire Protection Products: www.3m.com/firestop.
   d. Specified Technologies, Inc: www.stifirestop.com.
   e. Substitutions: See Section 01 6000 - Product Requirements.

C. Foam Firestoppping: Single component foam compound:

1. Manufacturers:
   a. Hilti, Inc: www.us.hilti.com.
   b. 3M Fire Protection Products: www.3m.com/firestop.
   c. Specified Technologies, Inc: www.stifirestop.com.
   d. Substitutions: See Section 01 6000 - Product Requirements.

D. Fibered Compound Firestopping: Formulated compound mixed with incombustible non-asbestos fibers:

1. Manufacturers:
   a. A/D Fire Protection Systems Inc: www.adfire.com.

b. USG: www.usg.com.
c. Substitutions: See Section 01 6000 - Product Requirements.

E. Fiber Firestopping: Mineral fiber insulation used in conjunction with elastomeric surface sealer forming airtight bond to opening:

1. Manufacturers:
a. A/D Fire Protection Systems Inc: www.adfire.com.
b. Pecora Corporation: www.pecora.com.
c. Thermafiber, Inc: www.thermafiber.com.
d. Substitutions: See Section 01 6000 - Product Requirements.

F. Firestop Devices - Wrap Type: Mechanical device with incombustible filler and sheet stainless steel jacket, intended to be installed after penetrating item has been installed:

1. Manufacturers:
a. Hilti, Inc: www.us.hilti.com.
b. Grace Construction Products: www.na.graceconstruction.com.
c. 3M Fire Protection Products: www.3m.com/firestop.
d. Specified Technologies, Inc: www.stifirestop.com.
e. Substitutions: See Section 01 6000 - Product Requirements.

G. Intumescent Putty: Compound which expands on exposure to surface heat gain:

1. Manufacturers:
a. Hilti, Inc: www.us.hilti.com.
b. Grace Construction Products: www.na.graceconstruction.com.
c. 3M Fire Protection Products: www.3m.com/firestop.
d. Specified Technologies, Inc: www.stifirestop.com.
e. Substitutions: See Section 01 6000 - Product Requirements.

H. Reusable Firestopping: Removable intumescent compressible shapes, pillows, or blocks specifically tested in removable configuration:

1. Manufacturers:
a. Hilti, Inc: www.us.hilti.com.
b. Grace Construction Products: www.na.graceconstruction.com.
c. Nelson FireStop Products: www.nelsonfirestop.com.
d. Specified Technologies, Inc: www.stifirestop.com.
e. Substitutions: See Section 01 6000 - Product Requirements.

I. Primers, Sleeves, Forms, Insulation, Packing, Stuffing, and Accessories: Type required for tested assembly design.

PART 3 - PART 3 - EXECUTION

3.1 EXAMINATION

A. Verify openings are ready to receive the work of this section.

3.2 PREPARATION

A. Clean substrate surfaces of dirt, dust, grease, oil, loose material, or other matter that could adversely affect bond of firestopping material.

B. Remove incompatible materials that could adversely affect bond.

3.3 INSTALLATION

A. Install materials in manner described in fire test report and in accordance with manufacturer's instructions, completely closing openings.

B. Do not cover installed firestopping until inspected by authority having jurisdiction.

C. Install labeling required by code.

3.4 PROTECTION

A. Clean adjacent surfaces of firestopping materials.

B. Protect adjacent surfaces from damage by material installation.

END OF SECTION 07 8400

SECTION 07 8413 - PENETRATION FIRESTOPPING

PART 1 - GENERAL

1.1 SUMMARY

A. Section Includes:

1. Penetrations systems.
2. Firestopping of all joints and penetration in fire-resistance rated and smoke-resistant assemblies, whether indicated in drawings or not.

1.2 ACTION SUBMITTALS

A. Product Data: For each type of product.

B. Product Schedule: For each penetration firestopping system. Include location, illustration of firestopping system, and design designation of qualified testing and inspecting agency.

1. Engineering Judgments: Where Project conditions require modification to a qualified testing and inspecting agency's illustration for a particular penetration firestopping system, submit illustration, with modifications marked, approved by penetration firestopping system manufacturer's fire-protection engineer as an engineering judgment or equivalent fire-resistance-rated assembly. Obtain approval of authorities having jurisdiction prior to submittal.

1.3 QUALITY ASSURANCE

A. Installer Qualifications: A firm that has been approved by FM Approval according to FM Approval 4991, "Approval of Firestop Contractors," or been evaluated by UL and found to comply with its "Qualified Firestop Contractor Program Requirements."

B. Fire testing: Provide firestopping assemblies of design that provide the schedule fore ratings when tested in accordance with methods indicated.

1.4 FIELD CONDITIONS

A. Comply with firestopping manufacture's recommendations for temperature and conditions during and after installation. Maintain minimum temperature before, during and for three days after installation of materials.

B. Provide ventilation in area where solvent-cured materials are being installed.

PART 2 - PRODUCTS

2.1 PENETRATION FIRESTOPPING SYSTEMS

A. Firestopping: Any material meeting requirements.

B. Firestopping at Combustible Pipe and Conduit or Cable Tray: Caulk or putty

C. Firestopping at Cable penetrations, not in conduit or cable tray: Caulk or putty.

D. Firestopping at Control joints (without Penetrations): Any material meeting requirements.

2.2 MATERIALS

A. Firestopping Sealants: Provide only products having lower volatile organic compount content than required by South Coast Air Quality Management District Rule No. 1168

B. Primers, Sleeves, Forms, Insulation, Packing, Stuffing and Accessories: Type required for tested assembly design.

PART 3 - EXECUTION

3.1 INSTALLATION

A. Verify openings are ready to receive the work of this section.

3.2 PREPARATION

A. Clean substrate surfaces of dirt, dust, grease, oil, loose material, or other matter that could adversely affect bond of firestopping.

B. Remove incompatible materials that could adversely affect bond.

3.3 INSTALLATIONS

A. Install materials in manner described in the fire test report and in accordance with manufacturer's instructions, completely closing openings.

B. Do not cover installed firestopping until inspected by authority having jurisdiction.

C. Install labeling required by code.

3.4 CLEANING

A. Cleaning adjacent surfaces of firestopping material

3.5 PROTECTION

A. Protect adjacent surfaces from damage by material installation

END OF SECTION 07 8413

SECTION 07 9200 - JOINT SEALANTS

PART 1 - GENERAL

1.1 SUMMARY

A. Section Includes:

1. Sealants and joint backing
2. Precompressed foam sealers

1.2 INFORMATIONAL SUBMITTALS

A. Product test reports.

B. Field-adhesion test reports.

1.3 QUALITY ASSURANCE

A. Qualifications:

1. Manufacturer Qualifications: Company specializing in manufacturing in Products specified in this section with three years documented experience.

PART 2 - PRODUCTS

2.1 SEALANTS

A. Sealants and Primers – General: Provide products having VOC meeting local jurisdiction.

2.2 ACCESSORIES

A. Primer: Non-staining type., recommended by sealant manufacturer the suit application.

B. Joint Cleaner – Non-corrosive and non-staining tpe, recommended by sealant manufacturer; compatible with joint forming materials.

C. Bond-Breaker: Pressure sensitive tape recommended by sealant manufacturer to suit application.

PART 3 - EXECUTION

3.1 EXAMINATION

A. Verify that substrate surfaces and ready to receive work.

B. Verify that joint backing and release tapes are compatible with sealants.

3.2 PREPARATION

A. Remove loose materials and foreign matter that could impair adhersion of sealant.

B. Clean and prime joints in accordance with manufacturer's instructions.

C. Perform preparation in accordance with manufacture's instructions and ASTM C1193

D. Protect elements surrounding the work of this section from damage or disfigurement.

3.3 INSTALLATION OF JOINT SEALANTS

A. Perform work in accordance with sealant manufacture's requirement for preparation of surfaces and material installation instructions

B. Perform installation in accordance with ASTM C1193.

C. Install bond breaker where joint backing is not used.

D. Install sealant free of air pockets, foreign embedded matter, ridges and sags.

E. Apply sealant within recommended application temperature ranges. Consult manufacturer when sealant cannot be applied with in these temperature ranges.

F. Tool joints concave

3.4 CLEANING

A. Clean adjacent soiled surfaces

3.5 PROTECTION

A. Protect sealants until cured

END OF SECTION 07 9200

SECTION 08 1113 - HOLLOW METAL DOORS AND FRAMES

PART 1 - GENERAL

1.1 SUMMARY

A. Section includes:

1. Section includes hollow-metal work.

1.2 DEFINITIONS

A. Minimum Thickness: Minimum thickness of base metal without coatings according to NAAMM-HMMA 803 or SDI A250.8.

1.3 ACTION SUBMITTALS

A. Product Data: For each type of product.

B. Shop Drawings: Include the following:

1. Elevations of each door type.
2. Details of doors, including vertical- and horizontal-edge details and metal thicknesses.
3. Frame details for each frame type, including dimensioned profiles and metal thicknesses.

C. Samples for Initial Selection: For units with factory-applied color finishes.

D. Samples for Verification: For each type of exposed finish required.

E. Schedule: Prepared by or under the supervision of supplier, using same reference numbers for details and openings as those on Drawings.

1.4 INFORMATIONAL SUBMITTALS

A. Product test reports.

PART 2 - PRODUCTS

2.1 MANUFACTURERS

A. Manufacturers: Subject to compliance with requirements, available manufacturers offering products that may be incorporated into the Work include, but are not limited to, the following:

1. Amweld International, LLC.

2. Apex Industries, Inc.
3. Ceco Door Products; an Assa Abloy Group company.
4. Commercial Door & Hardware Inc.
5. Concept Frames, Inc.
6. Curries Company; an Assa Abloy Group company.
7. Custom Metal Products.
8. Daybar.
9. Deansteel.
10. de La Fontaine Industries.
11. DKS Steel Door & Frame Sys. Inc.
12. Door Components, Inc.
13. Fleming-Baron Door Products.
14. Gensteel Doors Inc.
15. Greensteel Industries, Ltd.
16. HMF Express.
17. Hollow Metal Inc.
18. Hollow Metal Xpress.
19. J/R Metal Frames Manufacturing, Inc.
20. Karpen Steel Custom Doors & Frames.
21. L.I.F. Industries, Inc.
22. LaForce, Inc.
23. Megamet Industries, Inc.
24. Mesker Door Inc.
25. Michbi Doors Inc.
26. MPI Group, LLC (The).
27. National Custom Hollow Metal.
28. North American Door Corp.
29. Philipp Manufacturing Co (The).
30. Pioneer Industries, Inc.
31. Premier Products, Inc.
32. Republic Doors and Frames.
33. Rocky Mountain Metals, Inc.
34. Security Metal Products Corp.
35. Shanahans Manufacturing Ltd.
36. Steelcraft; an Ingersoll-Rand company.
37. Steward Steel; Door Division.
38. Stiles Custom Metal, Inc.
39. Titan Metal Products, Inc.
40. Trillium Steel Doors Limited.

2.2 REFERENCE STANDARDS

A. HUD UM89 Exterior Insulated Steel Doors

2.3 DOORS AND FRAMES

A. Requirement for all Doors and Frames:

1. Accessibility: Comply with ANSI/ICC A117.1.

2. Door Top Closures: Flush with tops of faces and edges
3. Door Edge Profile: Beveled on both edges
4. Door Texture: Smooth Faces.
5. Glazed Lights: Non-removable stops on non-secure side, sizes and configuration as indicated on drawings.
6. Hardware Preparation: In accordance with BHMA A156.115 with reinforced welded in place, in addition to other requirements specified in door grade standard.
7. Galvanizing for Units in Wet Areas: All components hot-dipped zinc-iron alloy-coated (galvannealed), manufacturer's standard coating thickness.
8. Finish: Factory primed for field finishing

B. Combined Requirements: If a particular door and frame unit is indicated to comply with more than one type of requirement, comply with all the specified requirements for each type; for instance, an exterior door that is also indicated as being sound-rated must comply with the requirements specified for exterior doors and for sound-rated; where two requirements conflict, comply wit the most stringent.

2.4 STEEL DOORS

A. Exterior Doors Type:

1. Core: Polystyrene foam.
2. Galvanizing: All components hot-dipped zinc-iron alloy-coated (galvannealed), manufacturer's standard coating thickness
3. Texture: Smooth faces.
4. Weatherstripping: Separate, see Section 08 7100
5. Finish: Factory primed for field finishing

B. Interior Doors, Non-fire-Rated:

1. Core: Cardboard honeycomb
2. Texture: Smooth finished-grade
3. Finish: Factory primed, for field finishing

C. Interior Doors, Fire-rated:

1. Fire-rating: As indicated on Door Schedule, tested in accordance with UL 10C ("positive pressure").
   a. Provide units listed and labeled by UL
   b. Attach fire rating label to each fire rated unit.
2. Core: Mineral fiberboard
3. Texture: Smooth faces
4. Finish: Factory primed, for field finishing.

D. Panels: Same construction, performance, and finish as doors

2.5 STEEL FRAMES

A. General

1. Comply with the requirements of grade specified for corresponding door.
2. Finish: Same as for door

B. Finish: Factory primed for field finishing

C. Interior Door Frames, Non-fire-Rated: Knock-down type.

1. Finish: Factory primed for field finishing

D. Interior Doors Frame, Fire-rated Knock-down Type.

1. Fire Rating: Same as door, labeled.
2. Finish: Factory primed for field finishing.

E. Mullions for Pairs of Doors: Fixed, of profile similar to jambs.

2.6 ACCESSORY MATERIALS

A. Glazing: As specified in Section 08 8000, factory installed

B. Astragal for Double-Doors: Specified in Section 08 7100

1. Exterior Doors: Steel, Z-shaped.

2.7 FINISH MATERIALS

A. Primer: Rust inhibiting, complying with ANSI A250.10, door manufacturer's standard.

PART 3 - EXECUTION

3.1 EXAMINATION

A. Verify existing openings before starting work.

B. Verify that opening sizes and tolerances are acceptable.

3.2 INSTALLATION

A. Install in accordance with the requirements of the specified door grade and NAAMM-HMMA 840.

B. In addition, install fire rated units in accordance with NFPA 80

C. Coordinate frame anchor placement with wall construction

D. Grout frames in masonry construction, using hand trowel methods; braces frames so that pressure of grout before setting will not deform frames.

E. Coordinate installation of hardware

F. Coordinate installation of glazing

G. Touch up damaged factory finishes

3.3 TOLERANCES

A. Clearances Between Door and Frame: As specified in ANSI A250.8

B. Maximum Diagonal Distortion: 1/16”in. Measured with straight edge, corner to corner.

3.4 ADJUSTING

A. Adjusting for smooth and balanced door movement.

END OF SECTION 08 1113

SECTION 08 1416 - FLUSH WOOD DOORS

PART 1 - GENERAL

1.1 RELATED DOCUMENTS

A. Drawings and general provisions of the Contract, including General and Supplementary Conditions and Division 1 Specification Sections, apply to this Section.

1.2 WORK INCLUDED

A. Wood doors and frames.

1.3 RELATED WORK

A. Section 08 1113 – Hollow Metal Doors and Frames

B. Section 08 5130 - Vinyl (PVC) Windows and Patio Doors

C. Section 08 7100 – Door Hardware.

D. Section 08 8000 - Glazing.

E. Section 09 9000 - Painting.

1.4 ACTION SUBMITTALS

A. Product Data: For each type of door. Include factory-finishing specifications.

B. Shop Drawings: Indicate location, size, and hand of each door; elevation of each kind of door; construction details not covered in Product Data; and the following:

1. Dimensions and locations of blocking.
2. Dimensions and locations of mortises and holes for hardware.
3. Dimensions and locations of cutouts.
4. Undercuts.
5. Requirements for veneer matching.
6. Doors to be factory finished and finish requirements.
7. Fire-protection ratings for fire-rated doors.

1.5 QUALITY ASSURANCE

A. Manufacture Qualification: Company specializing in manufacturing the product specified in the section with minimum three years of documented experience.

1.6 DELIVERY, STORAGE AND HANDLING

A. Package, deliver and store doors in accordance with specified quality standard.

B. Accept doors on site in manufacture's packaging. Inspect for damage.

C. Protect door with resilient packaging sealed with shrunk plastic. Do not store in damp or wet areas; or in areas where sunlight might bleach veneer. Seal top and bottom edges with tinted sealer if stored more than a week. Break seal on site to permit ventilation.

PART 2 - PRODUCTS

2.1 DOOR TYPES

A. Full Lite, Tempered Glass Entry Doors at Amenity: Treated, paint grade, Pine stile and rail doors, 1 3/8" thick with tempered glass light openings in size and pattern as shown on drawings.

1. Masonite Corporation or Jeld-Wen door with factor primed finish.
2. Insulated glazing, as indicated on door elevations on drawings. SDL Lites.

B. Interior unit doors: 1-3/8" thick with panel pattern per architectural drawings, solid core hardboard, paint grade finish. Doors provided complete with pre-hung split frames complete with hinges and preparation for latch sets.

1. Masonite Corporation or Jeld-Wen door with factor primed finish.

2.2 FABRICATION

A. Fabricate doors in accordance with NWWDA Quality Standards.

B. Provide custom doors with 1/2 inch thick edge strips of wood species to match face veneer.

C. Pre-machine doors in factory for finish hardware.

D. Undercut doors indicated in factory.

2.3 ACCESSORIES

A. Wood louvers:

1. Louver Blade as noted on drawings.

B. Glazing stops: GBG, butted corner; prepared for countersink style tamper proof screws.

C. Astragals for Non-rated Double-Doors: Wood, T shaped, overlapping and recessed at face edge.

PART 3 - EXECUTION

3.1 EXAMINATION

A. Verify existing conditions before work.

B. Verify that opening sizes and tolerances are acceptable

C. Do not install doors in frame openings that are not plumb or are out-of-tolerances for size or alignment.

3.2 INSTALLATION

A. Install doors in accordance with manufacturer's instructions and specified quality standard.

1. Install fire-rated doors in accordance with NFPA 80

B. Use machine tools to cut or drill hardware

C. Coordinate installation of doors with installation of frames and hardware

D. Coordinate installation of glazing.

3.3 TOLERANCES

A. Conform to specified quality standard for fit and clearances tolerances

B. Conform to specified quality standard for telegraphing, warp and squareness

3.4 ADJUSTING

A. Adjust doors for smooth and balances door movement

B. Adjust closers for full closure.

END OF SECTION 08 1416

SECTION 08 1614 - FIBERGLASS PATIO DOORS

PART 1 - GENERAL

1.1 SECTION INCLUDES

A. Fiberglass Exterior Doors

B. Prehung Systems

C. Glazing

1.2 REFERENCES

A. American Architectural Manufacturer Association (AAMA)

1. AAMA 1304; Voluntary Specification for Forced Entry Resistance of Side-Hinged Door Systems.

B. ASTM International

1. ASTM E283; Standard Test Method for Determining Rate of Air Leakage Through Exterior Windows, Curtain Walls, and Doors Under Specified Pressure Differences Across the Specimen
2. ASTM E330; Standard Test Method for Structural Performance of Exterior Windows, Doors, Skylights and Curtain Walls by Uniform Static Pressure Difference
3. ASTM E331; Standard Test Method for Water Penetration of Exterior Windows, Skylights, Doors, and Curtain Walls by Uniform Static Air Pressure Difference
4. ASTM E547; Standard Test Method for Water Penetration of Exterior Windows, Skylights, Doors, and Curtain Walls by Cyclic Static Air Pressure Difference
5. ASTM E 1886; Standard Test Method for Performance of Exterior Windows, Curtain Walls, Doors, and Impact Protective Systems Impacted by Missile(s) and Exposed to Cyclic Pressure Differentials
6. ASTM E 1996; Standard Specification for Performance of Exterior Windows, Curtain Walls, Doors and Impact Protective Systems Impacted by Windborne Debris in Hurricanes

C. National Fenestration Rating Council (NFRC)

1. NFRC 100; Procedure for Determining Fenestration Thermal Properties
2. NFRC 200; Solar Heat Gain Coefficient and Visible Transmittance

1.3 DESIGN REQUIREMENTS

A. Structural Requirements – Provide doors capable of complying with requirements indicated:

1. Design pressure: As indicated on drawings

B. Impact (Windborne-Debris) Resistance

1. Doors capable of resisting impact from windborne debris, when tested in accordance with ASTM E1886 and ASTM E1996.
2. Provide doors that have been tested in accordance with FBC Section 1626.

C. NFRC Requirements – Provide doors capable of complying with the following total door ratings:

1. U-Factor: in accordance with NFRC 100.
2. Solar Heat Gain Coefficient (SHGC): in accordance with NFRC 200.

1.4 SUBMITTALS

A. Refer to Section

B. Product Data: Submit door manufacturer current product literature, including installation instruction.

C. Samples: Provide finish samples for all products.

D. Quality Assurance Submittals

1. Design Data: Provide manufacturer test report numbers indicating product compliance with indicated requirements.
2. Manufacturer Instructions: Provide manufacturer's written installation instructions.

E. Closeout Submittals

1. Refer to Section

1.5 DELIVERY, STORAGE AND HANDLING

A. Refer to Section

B. Deliver doors, materials and components in manufacturer's original, unopened, undamaged containers with identification labels intact.

C. Store doors as recommended by manufacturer.

1.6 WARRANTY

A. Refer to Section

B. Manufacturer standard warranty indicating that doors will be free from material and workmanship defects from the date of substantial completion for the time periods indicated below:

1. Insignia Door System - Hardwood jambs: 5 Years.
2. Insignia Door System - Composite jambs and mouldings: 5 Years.
3. Factory Prefinish: 5 Years

PART 2 - PRODUCTS

2.1 MANUFACTURER

2.2 Basis of Design: Doors are based on the JELD-WEN®'s Custom Fiberglass, Patio Doors; or equivalent

2.3 MATERIALS

A. Fiberglass Skins: Strata Technology, incorporating multiple layers of resins, tinted resins, base colors and reinforcing materials.

B. Stiles and Rails: Engineered wood (laminated veneer lumber).

C. Core: PolyMicro foam.

2.4 FIBERGLASS PATIO DOORS

A. Door Construction: Engineered sandwich technology. 4 inch laminated veneer lumber stiles and rails banded by ¾ inch solid hardwood edges. Authentic grain pattern and solid wood door characteristics achieved through silicone mold casting and enhanced by proprietary 2-step gel coat construction. DBM (Double Bias Mat) 1208 with lineal strands running the full height and width of the panel add tensile strength to reduce thermal bow.

B. Thickness: Refer to drawings

C. Door Style: Refer to drawings

D. Door Shape: Refer to drawings

E. Finish: Refer to drawings

F. Hardware: Refer to drawings

G. Hardware: Refer to drawings

2.5 PREHUNG SYSTEMS

A. Profile: Refer to drawings

B. Jamb Width: Refer to drawings

C. Casing: Refer to drawings

D. Hinges: Solid brass concealed-bearing. Refer to drawings

E. Sills: Refer to drawings

2.6 GLAZING

A. Door Glazing: Refer to drawings

B. Sidelight Glazing: Refer to drawings

2.7 CONSTRUCTION ACCESSORIES

A. Flashing

1. Refer to Section 04 2000 Unit Masonry; 07 6200 Flashing and Sheet Metal

B. Sealants

1. Refer to Section 07 9200 Joint Sealants
2. Provide manufacturer recommended sealants maintain watertight conditions.

2.8 FABRICATION

A. Skins: Two detailed fiberglass skins created in molds using exclusive Strata Technology, which incorporates multiple layers of resins, tinted resins, base colors and reinforcing materials for greater structural strength.

B. Frame & Core: Skins are adhered to engineered wood frames with exclusive core materials and bonding agents that permanently lock skin to frame.

C. Prefinishing: Permalane prefinishing system uses layers of specially formulated grain filler and UV-protective stain coats which are encapsulated in a final protective top coat.

PART 3 - EXECUTION

3.1 GENERAL

A. Install doors in accordance with manufacturer's installation guidelines and recommendations.

3.2 EXAMINATION

A. Inspect door prior to installation.

B. Inspect rough opening for compliance with door manufacturer recommendations. Verify rough opening conditions are within recommended tolerances.

3.3 PREPARATION

A. Form and install sheet metal sill pan in accordance with manufacturer's recommendations.

B. Prepare doors and assemble components for installation in accordance with manufacturer's recommendations.

3.4 INSTALLATION

A. Insert jamb into rough opening, inspect for good fit, mark location of sill and remove unit.

B. Insert sidelight into jamb.

1. Inspect for good fit then remove.
2. Weatherproof sidelights in accordance with manufacturer's recommendations.
3. Insert sidelights back into jamb and tighten jamb to sidelight.
4. Anchor jamb leg to sidelight through back of rabbeted portion of jamb.
5. Anchor hinge side mull post to sidelight through hinge.
6. Anchor strike side mull post to sidelight under lock location.
7. Anchor top of mull post to sidelight through rabbeted face of jamb.
8. Anchor bottom of mull post to sidelight through rabbeted portion of mull post.

C. Prepare door and jamb for installation.

1. Apply flashing support to backside of sides and head of brickmold.
2. Apply flashing to corners, backside of frame and brickmold in accordance with manufacturer's recommendations.
3. Install jamb over caulk at marked sill location. Check sill for level.

D. Install jamb assembly.

1. Shim jambs straight. Inspect jamb for square, level and plumb.
2. Fasten jamb to studs.
3. Structurally secure sill.
4. Apply sealant to interior side of jamb between outside of jamb and stud to seal gaps.
5. Install hardware.
6. Install interior and exterior trim.
7. Set all nails below surface and fill holes with wood matched putty stick.
8. Install weatherstrip wedges.

E. Install transom.

1. Apply caulk on top of door head jamb.
2. Set transom jamb on door head jamb and fasten.
3. Shim transom straight. Inspect transom for square, level and plumb.
4. Fasten transom to studs.
5. Insert transom sash. Inspect for good fit then remove.
6. Apply caulk along inside corner of transom jamb.
7. Install transom sash and secure to jamb.
8. Install interior and exterior trim.
9. Set all nails below surface and fill holes with wood matched putty stick.

F. Weatherproofing: Apply in accordance with manufacturer's recommendations.

3.5 PROTECTION

A. Protect installed doors from damage.

3.6 SCHEDULES

A. Door Type: Refer to drawings

END OF SECTION 08 1614

SECTION 08 3113 - ACCESS DOORS AND FRAMES

PART 1 - GENERAL

1.1 SUMMARY

A. Section Includes:

1. Wall access doors and frames units.
2. Ceiling access and frame units

1.2 Related Requirements

A. Section 09 9000 – Painting and Coating: Field paint finish.

1.3 Reference Standards

A. ITS (DIR) – Directory of Listed Products; Intertek Testing Services NA Inc.; current edition

B. UL (FRD) – Fire Resistance Directory; Underwriters Laboratories Inc.; current edition.

1.4 SUBMITTALS

A. Product data: Provide sizes, types, finishes, hardware, schedule locations, and details of adjoining work.

B. Shop drawings: Indicate exact position of all access door units.

C. Manufacturer's Installation Instructions: Indicate requirements

PART 2 - PRODUCTS

2.1 Wall and Ceiling Units.

A. Door and Frame Units: Factory fabricated, fully assembled units with corner joints welded filled and ground flush; square and with out rack or warp; coordinate requirements with assemblies units are to in be installed in

1. Material: Steel
2. Size: As indicated
3. Prime coat with alkyd primer

2.2 ACCESS DOORS AND FRAMES FOR WALLS AND CEILINGS

A. Manufacturers: Subject to compliance with requirements, available manufacturers offering products that may be incorporated into the Work include, but are not limited to, the following:

B. Basis-of-Design Product: Subject to compliance with requirements, provide product indicated or comparable product by one of the following:

1. Access Panel Solutions.
2. Acudor Products, Inc.
3. Alfab, Inc.
4. Babcock-Davis.
5. Cendrex Inc.
6. Elmdor/Stoneman Manufacturing Co.; Div. of Acorn Engineering Co.
7. Jensen Industries; Div. of Broan-Nutone, LLC.
8. J. L. Industries, Inc.; Div. of Activar Construction Products Group.
9. Karp Associates, Inc.
10. Larsen's Manufacturing Company.
11. Maxam Metal Products Limited.
12. Metropolitan Door Industries Corp.
13. MIFAB, Inc.
14. Milcor Inc.
15. Nystrom, Inc.
16. Williams Bros. Corporation of America (The).

C. Source Limitations: Obtain each type of access door and frame from single source from single manufacturer.

PART 3 - EXECUTION

3.1 EXAMINATION

A. Verify that rough openings are correctly sized and located.

3.2 INSTALLATION

A. Install units in accordance with manufacturer's instructions

B. Install frames plumb and level in openings. Secure ridgely in place.

C. Position units to provide convenient access to concealed work requiring access.

END OF SECTION 08 3113

SECTION 08 5313 - VINYL WINDOWS

PART 1 - GENERAL

1.1 SUMMARY

A. Section includes vinyl-framed windows.

1.2 ACTION SUBMITTALS

A. Product Data: For each type of product.

B. Shop Drawings: Include plans, elevations, sections, hardware, accessories, insect screens, operational clearances, and details of installation, including anchor, flashing, and sealant installation.

C. Samples: For each exposed product and for each color specified.

D. Product Schedule: For vinyl windows. Use same designations indicated on Drawings.

1.3 INFORMATIONAL SUBMITTALS

A. Product test reports.

B. Sample warranties.

1.4 QUALITY ASSURANCE

A. Mockups: Build mockups to verify selections made under Sample submittals and to demonstrate aesthetic effects and set quality standards for materials and execution.

1.5 WARRANTY

A. Manufacturer's Warranty: Manufacturer agrees to repair or replace vinyl windows that fail in materials or workmanship within specified warranty period.

1. Warranty Period:
   a. Window: [**10**] years from date of Substantial Completion for material and breakage of seal per MDCR Architectural #17b.

PART 2 - PRODUCTS

2.1 MANUFACTURERS

A. Manufacturers: Subject to compliance with requirements, Refer to drawings

B. Basis-of-Design Product: Subject to compliance with requirements, provide product indicated on Drawings or comparable product by one of the following:

1. JELD-WEN, Inc
2. MI Wiondows and Doors
3. Anderson Windows
4. Windsor Windows and Doors
5. Atrium Windows and Doors
6. Interstate Window and Door
7. Plygem
8. Milgar Windows
9. Simonton Windows
10. Silverline
11. Thompson Creek
12. Vytex

2.2 WINDOW PERFORMANCE REQUIREMENTS

A. Product Standard: AAMA/WDMA/CSA 101/I.S.2/A440.

1. Minimum Performance Grade: As indicated on Drawings

B. Thermal Transmittance: Refer to insulation table on A0.3a for thermal rating.

C. Solar Heat-Gain Coefficient (SHGC): Refer to insulation table on A0.3a for SHGC rating.

D. Minimum Performance Class: As indicated on Drawings

2.3 VINYL WINDOWS

A. Operating Types: [**As indicated on Drawings**] .

B. Frames and Sashes: Impact-resistant, UV-stabilized PVC complying with AAMA/WDMA/CSA 101/I.S.2/A440.

1. Finish: Integral color, refer to drawings .
2. Gypsum Board Returns: Provide at interior face of frame.
3. Sill Trim: Per general Notes on A1.0a

C. Glass: Clear annealed glass, ASTM C 1036, Type 1, Class 1, q3.

1. Kind: Fully tempered [**where indicated on Drawings**] .

D. Insulating-Glass Units: ASTM E 2190.

1. Glass: ASTM C 1036, Type 1, Class 1, q3.
   a. Tint: None .
   b. Kind: Fully tempered [**where indicated on Drawings**] .
2. Lites: Refer to drawings .
3. Filling: Refer to drawings
4. Low-E Coating: Standard .

E. Glazing System: [**Manufacturer's standard factory-glazing system that produces weathertight seal**] .

F. Hardware, General: Provide manufacturer's standard corrosion-resistant hardware sized to accommodate sash weight and dimensions.

1. Exposed Hardware Color and Finish: Match Window Color .

G. Projected Window Hardware:

1. Gear-Type Rotary Operators: Complying with AAMA 901 when tested according to ASTM E 405, Method A. Provide operators that function without requiring the removal of interior screens or using screen wickets.
2. Limit Devices: Limit clear opening to [**4 inches**] for ventilation; with custodial key release.

H. Hung Window Hardware:

1. Counterbalancing Mechanism: AAMA 902.
2. Locks and Latches: Operated from the inside only.
3. Tilt Hardware: Releasing tilt latch allows sash to pivot about horizontal axis.

I. Weather Stripping: Provide full-perimeter weather stripping for each operable sash unless otherwise indicated.

J. Fasteners: Noncorrosive and compatible with window members, trim, hardware, anchors, and other components.

1. Exposed Fasteners: Do not use exposed fasteners to greatest extent possible. For application of hardware, use fasteners that match finish hardware being fastened.

2.4 INSECT SCREENS

A. General: Fabricate insect screens to integrate with window frame. Provide screen for each operable exterior sash. Screen wickets are not permitted.

1. Type and Location: Refer to drawings.

B. Aluminum Frames: Complying with SMA 1004 or SMA 1201.

1. Finish for Interior Screens: Baked-on organic coating in [**color selected by Architect from manufacturer's full range**] .

2. Finish for Exterior Screens: [**Baked-on organic coating in color selected by Architect from manufacturer's full range**] .

C. Glass-Fiber Mesh Fabric: Comply with ASTM D 3656/D 3656M.

1. Mesh Color: [**Manufacturer's standard**] .

2.5 FABRICATION

A. Fabricate vinyl windows in sizes indicated. Include a complete system for installing and anchoring windows.

B. Glaze vinyl windows in the factory.

C. Weather strip each operable sash to provide weathertight installation.

D. Mullions: Provide mullions and cover plates, compatible with window units, complete with anchors for support to structure and installation of window units. Allow for erection tolerances and provide for movement of window units due to thermal expansion and building deflections. Provide mullions and cover plates capable of withstanding design wind loads of window units. Provide manufacturer's standard finish to match window units.

E. Hardware: Mount hardware through double walls of vinyl extrusions or provide corrosion-resistant reinforcement.

F. Complete fabrication, assembly, finishing, hardware application, and other work in the factory to greatest extent possible. Disassemble components only as necessary for shipment and installation. Allow for scribing, trimming, and fitting at Project site.

PART 3 - EXECUTION

3.1 INSTALLATION

A. Comply with manufacturer's written instructions for installing windows, hardware, accessories, and other components. For installation procedures and requirements not addressed in manufacturer's written instructions, comply with installation requirements in ASTM E 2112.

B. Install windows level, plumb, square, true to line, without distortion, anchored securely in place to structural support, and in proper relation to wall flashing and other adjacent construction to produce weathertight construction.

C. Adjust operating sashes and hardware for a tight fit at contact points and weather stripping for smooth operation and weathertight closure.

D. Clean exposed surfaces immediately after installing windows. Remove excess sealants, glazing materials, dirt, and other substances.

E. Remove and replace sashes if glass has been broken, chipped, cracked, abraded, or damaged during construction period.

F. VHDA must inspect and approve an initial window installation per MDCR #17e

END OF SECTION 08 5313

SECTION 08 7100 - DOOR HARDWARE

PART 1 - GENERAL

1.1 SECTION INCLUDES

A. Hardware for wood and hollow steel doors.

B. Hardware for fire-rated doors.

C. Electrically operated and controlled hardware

D. Thresholds

E. Weatherstripping, seals and door gaskets.

1.2 RELATED REQUIREMENTS.

A. Section 08 1113 – Hollow-metal Doors and Frames

B. Section 08 1416 – Flush Wood Doors

C. Section 08 5130 – Vinyl Windows and Patio Doors

1.3 REFERENCE STANDARDS

A. ANSI/ICC A117.1 - American National Standard for Accessible and Usable Buildings and Facilities; International Code Council; 2003.

B. BHMA A156.1 - American National Standard for Butts and Hinges; Builders HardwareManufacturers Association, Inc.; 2006 (ANSI/BHMA A156.1).

C. BHMA A156.2 - American National Standard for Bored and Preassembled Locks & Latches; Builders Hardware Manufacturers Association; 2003 (ANSI/BHMA A156.2).

D. BHMA A156.3 - American National Standard for Exit Devices; Builders Hardware Manufacturers Association; 2001 (ANSI/BHMA A156.3).

E. BHMA A156.4 - American National Standard for Door Controls - Closers; Builders Hardware Manufacturers Association, Inc.; 2000 (ANSI/BHMA A156.4).

F. BHMA A156.5 - American National Standard for Auxiliary Locks & Associated Products; Builders Hardware Manufacturers Association; 2001 (ANSI/BHMA A156.5).

G. BHMA A156.6 - American National Standard for Architectural Door Trim; Builders Hardware Manufacturers Association; 2005 (ANSI/BHMA A156.6).

H. BHMA A156.7 - American National Standard for Template Hinge Dimensions; Builders Hardware Manufacturers Association; 2003 (ANSI/BHMA A156.7).

I. BHMA A156.8 - American National Standard for Door Controls - Overhead Stops and Holders; Builders Hardware Manufacturers Association, Inc.; 2005 (ANSI/BHMA A156.8).

J. BHMA A156.9 - American National Standard for Cabinet Hardware; Builders Hardware Manufacturers Association; 2010 (ANSI/BHMA A156.9).

K. BHMA A156.12 - American National Standard for Interconnected Locks & Latches; Builders Hardware Manufacturers Association; 2005 (ANSI/BHMA A156.12).

L. BHMA A156.13 - American National Standard for Mortise Locks & Latches; Builders Hardware Manufacturers Association; 2005 (ANSI/BHMA A156.13).

M. BHMA A156.14 - American National Standard for Sliding & Folding Door Hardware; Builders Hardware Manufacturers Association; 2007 (ANSI/BHMA A156.14).

N. BHMA A156.16 - American National Standard for Auxiliary Hardware; Builders Hardware Manufacturers Association; 2002 (ANSI/BHMA A156.16).

O. BHMA A156.17 - American National Standard for Self Closing Hinges & Pivots; Builders Hardware Manufacturers Association, Inc.; 2004 (ANSI/BHMA A156.17).

P. BHMA A156.18 - American National Standard for Materials and Finishes; Builders Hardware Manufacturers Association, Inc.; 2006 (ANSI/BHMA A156.18).

Q. BHMA A156.20 - American National Standard for Strap and Tee Hinges and Hasps; Builders Hardware Manufacturers Association; 2006 (ANSI/BHMA A156.20).

R. BHMA A156.21 - American National Standard for Thresholds; Builders Hardware ManufacturersAssociation; 2009 (ANSI/BHMA A156.21).

S. BHMA A156.22 - American National Standard for Door Gasketing and Edge Seal Systems, Builders Hardware Manufacturers Association; 2005 (ANSI/BHMA A156.22).

T. BHMA A156.23 - American National Standard for Electromagnetic Locks; Builders Hardware Manufacturers Association, Inc.; 2004 (ANSI/BHMA A156.23).

U. BHMA A156.115 - Hardware Preparation in Steel Doors and Steel Frames; 2006.

V. BHMA A156.115W - Hardware Preparation in Wood Doors with Wood or Steel Frames; 2006.

W. 36 CFR 1191 - Americans with Disabilities Act Accessibility Guidelines for Buildings and Facilities; Final Rule; current edition; (ADAAG - Americans with Disabilities Act, AccessibilityGuidelines).

X. DHI (LOCS) - Recommended Locations for Architectural Hardware for Standard Steel Doors and Frames; Door and Hardware Institute; 2004.

Y. DHI WDHS.3 - Recommended Locations for Architectural Hardware for Flush Wood Doors; Door and Hardware Institute; 1993; also in WDHS-1/WDHS-5 Series, 1996.

Z. ITS (DIR) - Directory of Listed Products; Intertek Testing Services NA, Inc.; current edition.

AA. NFPA 80 - Standard for Fire Doors and Other Opening Protectives; 2010.

BB. NFPA 101 - Code for Safety to Life from Fire in Buildings and Structures; National Fire Protection Association; 2009.

CC. UL (BMD) - Building Materials Directory; Underwriters Laboratories Inc.; current edition.

1.4 ADMINSTRATIVE REQUIREMENTS

A. Coordinate the manufacture, fabrication, and installation of products onto which door hardware will be installed.

B. Sequence installation to ensure utility connections are achieved in an orderly and expeditious manner.

1.5 SUBMITTALS

A. Product Data: Manufacturer's catalog literature for each type of hardware, marked to clearly how products to be furnished for this project.

B. Samples: Prior to preparation of hardware schedule:

1. Samples will be returned to supplier.

C. Hardware Schedule: Detailed listing of each item of hardware to be installed on each door. Use door numbering scheme as included in the Contract Documents. Identify electrically operated items and include power requirements.

D. Keying Schedule: Submit for approval of Owner.

E. Manufacturer's Installation Instructions: Indicate special procedures, perimeter conditions requiring special attention.

F. Project Record Documents: Record actual locations of concealed equipment, services, and conduit.

G. Maintenance Data: Include data on operating hardware, lubrication requirements, and inspection procedures related to preventative maintenance.

H. Keys: Deliver with identifying tags to Owner by security shipment direct from hardware supplier.

I. Warranty: Submit manufacturer's warranty and ensure that forms have been completed in Owner's name and registered with manufacturer.

J. Maintenance Materials and Tools: Furnish the following for Owner's use in maintenance of project.

1. See Section 01 6000 - Product Requirements, for additional provisions.

2. Tools: One set of all special wrenches or tools applicable to each different or special hardware component, whether supplied by the hardware component manufacturer or not.

1.6 QUALITY ASSURANCE

A. Manufacturer Qualifications: Company specializing in manufacturing the products specified in this section with minimum three years of documented experience

1.7 DELIVERY, STORAGE AND HANDLING

A. Package hardware items individually; label and identify each package with door opening code to match hardware schedule.

PART 2 - PRODUCTS

2.1 DOOR HARDWARE – GENERAL

A. Provide all hardware specified or required to make doors fully functional, compliant with applicable codes, and secure to the extent indicated.

B. Provide all items of a single type of the same model by the same manufacturer.

C. Provide products that comply with the following

1. Applicable provisions of federal, state, and local codes
2. ANSI/ICC A117.1, American National Standard for Accessible and Usable Buildings and Facilities.
3. Applicable provisions of NFPA 101, Life Safety Code.
4. Fire-Rated Doors: NFPA 80.
5. All Hardware on Fire-Rated Doors : Listed and classified by UL as suitable for the purpose specified and indicated.
6. Products Requiring Electrical Connection: Listed and classified by UL as suitable for the purpose specified and indicated.

D. Function: Lock and latch function numbers and descriptions of manufactures series as listed in hardware schedule.

E. Electrically Operated and/or Controlled Hardware: Provide all power supplies, power transfer hinges, relays, and interfaces required for proper operation; provide wiring between hardware and control components and to building power connection.

F. Finishes: Identified in schedule.

2.2 HINGES

A. Quantity of Hinges Per Door:

1. Doors From 60 inches (1.5 m) High up to 90 inches (2.3 m) High: Three hinges.
2. Basis-of-Design Product: Subject to compliance with requirements, provide product indicated on schedule or comparable product by one of the following:
    a. Baldwin Hardware Corporation.
    b. Bommer Industries, Inc.
    c. Cal-Royal Products, Inc.
    d. Hager Companies.
    e. IVES Hardware; an Ingersoll-Rand company.
    f. Lawrence Hardware Inc.
    g. McKinney Products Company; an ASSA ABLOY Group company.
    h. PBB, Inc.
    i. Stanley Commercial Hardware; Div. of The Stanley Works.

2.3 PUSH/PULLS

A. Push/Pulls: Comply with BHMA A156.6.

1. Provide push and pull on doors not specified to have lockset, latchset, exit device, or auxiliary lock.
2. On solid doors, provide matching push plate and pull plate on opposite faces.
3. On glazed storefront doors, provide matching push/pull bars on both faces.
4. Basis-of-Design Product: Subject to compliance with requirements, provide product indicated on schedule or comparable product by one of the following:
    a. Baldwin Hardware Corporation.
    b. Bommer Industries, Inc.
    c. Cal-Royal Products, Inc.
    d. Hager Companies.
    e. IVES Hardware; an Ingersoll-Rand company.
    f. Lawrence Hardware Inc.
    g. McKinney Products Company; an ASSA ABLOY Group company.
    h. PBB, Inc.
    i. Stanley Commercial Hardware; Div. of The Stanley Works.

2.4 LOCKS AND LATCHES

A. Locks: Provide a lock for every door, unless specifically indicated as not requiring locking.

1. Hardware Sets indicate locking functions required for each door.
2. Basis-of-Design Product: Subject to compliance with requirements, provide product indicated on schedule or comparable product by one of the following:
    a. Arrow USA; an ASSA ABLOY Group company.
    b. Best Access Systems; Div. of Stanley Security Solutions, Inc.
    c. Cal-Royal Products, Inc.
    d. Corbin Russwin Architectural Hardware; n ASSA ABLOY Group Company.
    e. Falcon Lock; An Ingersoll-Rand Company.
    f. K2 Commercial Hardware; a Black & Decker Corp. company.
    g. Marks USA.
    h. Medeco Security Locks, Inc.; an ASSA ABLOY Group company.
    i. PDQ Manufacturing.

j. SARGENT Manufacturing Company; an ASSA ABLOY Group company.
k. Schlage Commercial Lock Division; an Ingersoll-Rand company.
l. Weiser Lock Corp.; a Black & Decker Corp. company.
m. Yale Security Inc.; an ASSA ABLOY Group company.

B. Electrically Operated Locks: Fail secure unless otherwise indicated

1. Basis-of-Design Product: Subject to compliance with requirements, provide product indicated on schedule or comparable product by one of the following:
   a. Door Controls International, Inc.
   b. Dortronics Systems, Inc.
   c. DynaLock Corp.
   d. Rutherford Controls Int'l. Corp.
   e. Schlage Commercial Lock Division; an Ingersoll-Rand company.
   f. Securitron Magnalock Corporation; an ASSA ABLOY Group company.
   g. Security Door Controls.

C. Keying: Keyed differently but alike in each unit. Mechanical Rooms keyed alike.

1. Include construction keying.

D. Latches: Provide a latch for every door that is not required to lock, unless specifically indicated "push/pull" or "not required to latch".

2.5 FLUSHBOLTS

A. Flushbolts: Lever extension bolts in leading edge of door, one bolt into floor, one bolt into top of frame.

1. Pairs of Swing Doors: At inactive leaves, provide flush bolts of type as required to comply with code.
2. Floor Bolts: Provide dustproof strike except at metal thresholds.
3. Basis-of-Design Product: Subject to compliance with requirements, provide product indicated on schedule or comparable product by one of the following:
   a. Adams Rite Manufacturing Co.; an ASSA ABLOY Group company.
   b. Burns Manufacturing Incorporated.
   c. Don-Jo Mfg., Inc.
   d. Door Controls International, Inc.
   e. Hiawatha, Inc.
   f. IVES Hardware; an Ingersoll-Rand company.
   g. Trimco.

B. Manual Flushbolts: Provide lever extensions for top bolt at over-size doors.

C. Coordinators: Provide on doors having closers and self-latching or automatic flushbolts to ensure that leaves close in proper order.

2.6 EXIT DEVICES

A. Locking Functions: Functions as defined in BHMA A156.3, and as follows:

1. Entry/Exit, Always-Unlocked: Outside lever unlocked, no outside key access, no latch holdback.
2. Entry/Exit, Free Swing: Key outside retracts latch, latch holdback (dogging) for free swing during occupied hours, not fire-rated; outside trim must be specified as lever or pull.
3. Entry/Exit, Always-Latched: Key outside locks and unlocks lever, no latch holdback (dogging).
4. Entry/Exit, Always-Locked: Key outside retracts latchbolt but does not unlock lever, no latch holdback.
5. Exit Only, Secure: No outside trim, no key entry, no latch holdback, deadlocking latchbolt.
6. Basis-of-Design Product: Subject to compliance with requirements, provide product indicated on schedule or comparable product by one of the following:
   a. Adams Rite Manufacturing Co.; an ASSA ABLOY Group company.
   b. Arrow USA; an ASSA ABLOY Group company.
   c. Cal-Royal Products, Inc.
   d. Corbin Russwin Architectural Hardware; an ASSA ABLOY Group company.
   e. Detex Corporation.
   f. Door Controls International, Inc.
   g. DORMA Architectural Hardware; Member of The DORMA Group North America.
   h. Dor-O-Matic; an Ingersoll-Rand company.
   i. K2 Commercial Hardware; a Black & Decker Corp. company.
   j. Monarch Exit Devices & Panic Hardware; an Ingersoll-Rand company.
   k. Precision Hardware, Inc.; Division of Stanley Security Solutions, Inc.
   l. Rutherford Controls Int'l. Corp.
   m. SARGENT Manufacturing Company; an ASSA ABLOY Group company.
   n. Von Duprin; an Ingersoll-Rand company.
   o. Yale Security Inc.; an ASSA ABLOY Group company.

2.7 CLOSERS

A. Closers: Complying with BHMA A156.4.

1. Provide surface-mounted, door-mounted closers unless otherwise indicated.
2. Provide a door closer on every exterior door.
3. Provide a door closer on every fire- and smoke-rated door. Spring hinges are not an acceptable self-closing device unless specifically so indicated.
4. On pairs of swinging doors, if an overlapping astragal is present, provide coordinator to ensure the leaves close in proper order.
5. At corridors, locate door-mounted closer on room side of door.
6. At outswinging exterior doors, mount closer in inside of door.
7. Basis-of-Design Product: Subject to compliance with requirements, provide product indicated on schedule or comparable product by one of the following:
   a. Arrow USA; an ASSA ABLOY Group company.
   b. Corbin Russwin Architectural Hardware; an ASSA ABLOY Group company.
   c. DORMA Architectural Hardware; Member of The DORMA Group North America.
   d. Dor-O-Matic; an Ingersoll-Rand company.
   e. K2 Commercial Hardware; a Black & Decker Corp. company.

f. LCN Closers; an Ingersoll-Rand company.
g. Norton Door Controls; an ASSA ABLOY Group company.
h. Rixson Specialty Door Controls; an ASSA ABLOY Group company.
i. SARGENT Manufacturing Company; an ASSA ABLOY Group company.
j. Yale Security Inc.; an ASSA ABLOY Group company.

2.8 STOPS and HOLDERS

A. Stops: Complying with BHMA A156.8; provide a stop for every swinging door, unless otherwise indicated.

1. Provide wall stops, unless otherwise indicated
2. If wall stops are not practical, due to configuration of room or furnishings, provide overhead stop.
3. Stop is not required if positive stop feature is specified for door closer; positive stop feature of door closer is not an acceptable substitute for a stop unless specifically so stated.
4. Basis-of-Design Product: Subject to compliance with requirements, provide product indicated on schedule or comparable product by one of the following:
   a. Architectural Builders Hardware Mfg., Inc.
   b. Glynn-Johnson; an Ingersoll-Rand company.
   c. Rockwood Manufacturing Company.
   d. SARGENT Manufacturing Company; an ASSA ABLOY Group company.

2.9 GASKETING AND THRESHOLDS

A. Gaskets: Complying with BHMA A156.22.

1. On each exterior door, provide weatherstripping gaskets, unless otherwise indicated; top, sides, and meeting stiles of pairs.
2. On each exterior door, provide door bottom sweep, unless otherwise indicated.
3. Basis-of-Design Product: Subject to compliance with requirements, provide product indicated on schedule or comparable product by one of the following:
   a. Hager Companies.
   b. M-D Building Products, Inc.
   c. National Guard Products.
   d. Pemko Manufacturing Co.; an ASSA ABLOY Group company.
   e. Reese Enterprises, Inc.
   f. Rixson Specialty Door Controls; an ASSA ABLOY Group company.
   g. Sealeze; a unit of Jason Incorporated.
   h. Zero International.
4. At each exterior door, provide a threshold unless otherwise indicated.
5. Field cut threshold to frame for tight fit.
6. Basis-of-Design Product: Subject to compliance with requirements, provide product indicated on schedule or comparable product by one of the following:
   a. Hager Companies.
   b. M-D Building Products, Inc.
   c. National Guard Products.
   d. Pemko Manufacturing Co.; an ASSA ABLOY Group company.
   e. Reese Enterprises, Inc.

f. Rixson Specialty Door Controls; an ASSA ABLOY Group company.
g. Sealeze; a unit of Jason Incorporated.
h. Zero International.

B. Fasteners At Exterior Locations: Non-corroding.

2.10 PROTECTION PLATES AND ARCHITECTURAL TRIM

A. Protection Plates: See Plan for Locations

2.11 KEY CONTROLS

A. Fire Department Lock Box: Heavy-duty, surface mounted, solid stainless-steel box with hinged door and interior gasket seal; single drill resistant lock with dust covers and tamper alarm.

1. Finish: Manufacturer's standard dark bronze.
2. Basis-of-Design Product: Subject to compliance with requirements, provide product indicated on schedule or comparable product by one of the following:
   a. American Key Boxes and Cabinets.
   b. American Key Boxes and Cabinets.
   c. HPC, Inc.

B. Capacity: Holds 10 keys.

PART 3 - EXECUTION

3.1 EXAMINATION

A. Verify that doors and frames are ready to receive work; labeled, fire-rated doors and frames are present and properly installed, and dimensions are as indicated on shop drawings.

B. Verify that electric power is available to power operated devices and of the correct characteristics.

3.2 INSTALLATION

A. Install hardware in accordance with manufacturer's instructions and applicable codes.

B. Use templates provided by hardware item manufacturer.

C. Do not install surface mounted items until finishes applied to substrate are complete.

D. Install hardware on fire-rated doors and frames in accordance with code and NFPA 80.

E. Mounting heights for hardware from finished floor to center line of hardware item: As listed in Schedule, unless otherwise noted:

1. For steel doors and frames: See Section 08 1113

3.3 FIELD QUALITY CONTROL

A. Field inspection and testing will be performed under provisions of Section 01 4000

3.4 ADJUSTING

A. Adjust work under provisions of Section 01 7000

B. Adjust hardware for smooth operation.

C. Adjust gasketing for complete, continuous seal; replace if unable to make complete seal.

3.5 CLEANING

A. Clean adjacent surfaces soiled by hardware installation. Clean finished hardware per manufacturer's instructions after final adjustments has been made. Replace items that cannot be cleaned to manufacturer's level of finish quality at no additional cost.

3.6 PROTECTION

A. Protect finished Work under provisions of Section 01 7000

B. Do not permit adjacent work to damage hardware or finish.

END OF SECTION 08 7100

SECTION 08 8000 - GLAZING

PART 1 - GENERAL

1.1 SUMMARY

A. Section Includes:

1. Glass

1.2 RELATED REQUIREMENTS

A. Section 07 2500 - Weather Barriers

B. Section 07 9200 - Joint Sealants

C. Section 08 1113 - Hollow Metal Doors and Frames

D. Section 08 5130 - Vinyl Windows and Patio Doors

1.3 REFERENCE STANDARDS

A. 16 CFR 1201 - Safety Standard for Architectural Glazing Materials; current edition

B. ANSI Z97.1 - American National Standard for Safety Glazing Materials Used in Buildings, Safety Performance Specifications and Methods of Test; 2009.

C. ASTM C920 - Standard Specification for Elastomeric Joint Sealants; 2011.

D. ASTM C1036 - Standard Specification for Flat Glass; 2006.

E. ASTM C1172 - Standard Specification for Laminated Architectural Flat Glass; 2009e1.

F. ASTM C1193 - Standard Guide for Use of Joint Sealants; 2009.

G. ASTM E2190 - Standard Specification for Insulating Glass Unit Performance and Evaluation; 2010.

1.4 SUBMITTALS

A. Product Data on Glass Types: Provide structural, physical and environmental characteristics, size limitations, special handling or installation requirements.

1.5 QUALITY ASSURANCE

A. Perform Work in accordance with GANA Glazing Manual and FGMA Sealant Manual for glazing installation methods.

1.6 FIELD CONDITIONS

A. Do not install glazing when ambient temperature is less than 50 degrees F (10 degrees C).

B. Maintain minimum ambient temperature before, during and 24 hours after installation of glazing compounds.

PART 2 - PRODUCTS

2.1 GLASS TYPES

A. Type S-3 - Single Safety Glazing: Non-fire-rated. Interior use.

1. Applications: Provide this type of glazing in the following locations:
   a. Glazed lites in doors, except fire doors.
   b. Glazed sidelights to doors, except in fire-rated walls and partitions.
   c. Glazed view windows and panel in partitions enclosing athletic activity rooms, except in fire rated wall and partitions.
   d. Other locations required by applicable federal, state and local code and regulations
2. Type: Fully tempered float glass as specified
3. Tint: Clear
4. Thickness: ¼
   a. B. Exterior Insulating Glass for Exterior Windows per MDCR Architectural #17a. 1/2” Thickness. Insulating per A0.3a.

2.2 GLASS ACCESSORIES

A. Setting Blocks: Neoprene, 80 to 90 Shore A durometer hardness, ASTM C864 Option I. Length of 0.1 inch for each square foot (25 mm for each square meter) of glazing or minimum 4 inch (100 mm) x width of glazing rabbet space minus 1/16 inch (1.5 mm) x height to suit glazing method and pane weight and area.

B. Spacer Shims: Neoprene, 50 to 60 Shore A durometer hardness, ASTM C864 Option I. Minimum 3 inch (75 mm) long x one half the height of the glazing stop x thickness to suit application, self adhesive on one face.

C. Glazing Clips: Manufacturer's standard type.

PART 3 - EXECUTION

3.1 EXAMINATION

A. Verify that openings for glazing are correctly sized and within tolerance.

B. Verify that surfaces of glazing channels or recesses are clean, free of obstructions that may impede moisture movement, weeps are clear, and ready to receive glazing.

3.2 PREPARATION

A. Clean contact surfaces with solvent and wipe dry.

B. Seal porous glazing channels or recesses with substrate compatible primer or sealer.

C. Prime surfaces scheduled to receive sealant.

D. Install sealants in accordance with ASTM C1193 and FGMA Sealant Manual.

E. Install sealant in accordance with manufacturer's instructions.

3.3 INSTALLATION – INTERIOR DRY METHOD (TAPE AND TAPE)

A. Cut glazing tape to length and set against permanent stops, projecting 1/16 inch (1.6 mm) above sight line.

B. Place setting blocks at 1/4 points with edge block no more than 6 inches (150 mm) from corners.

C. Rest glazing on setting blocks and push against tape for full contact at perimeter of pane or unit.

D. Place glazing tape on free perimeter of glazing in same manner described above. Install removable stop without displacement of tape. Exert pressure on tape for full continuous contact.

E. Knife trim protruding tape.

3.4 CLEANING

A. Remove glazing materials from finish surfaces.

B. Remove labels after Work is complete.

C. Clean glass and adjacent surfaces.

3.5 PROTECTION

A. After installation, mark pane with an 'X' by using removable plastic tape or paste; do not mark heat absorbing or reflective glass units.

END OF SECTION 08 8000

SECTION 08 8300 - MIRRORS

PART 1 - GENERAL

1.1 RELATED DOCUMENTS

A. Drawings and general provisions of Contract, including General and Supplementary Conditions and Division-1 Specification sections, apply to work of this section.

1.2 DESCRIPTION OF WORK

A. Extent of mirror units is indicated on drawings

B. Types of mirror units required include the following:

1. Frameless glass mirrors.

1.3 QUALITY ASSURANCE

A. General: Provide mirror units produced by single manufacturer for entire project.

1.4 SUBMITTALS

A. Product Data: Submit manufacturer's technical data, detail drawings, and installation instructions for mirror units.

B. Schedule: Submit schedule indicating mirror types, quantities, sizes and installation locations for each mirror to be provided for project.

1.5 SPECIFIED PRODUCT WARRANTY

A. Provide manufacturer's written 5-year warranty against silver spoilage of mirrors, agreeing to replace any mirrors which develop visible defects within warranty period.

PART 2 - PRODUCTS

2.1 MATERIALS

A. Mirror Glass 1/4” thick, Type I, Class I, Quality q2, conforming to FS DD-G-451 with silvering, copper coating, and protective organic coating complying with FS DD-M-411

2.2 FABRICATION

A. Hangers: Provide system of mounting mirror units.

PART 3 - EXECUTION

3.1 INSTALLATION

A. Secure mirrors to walls in concealed manner with hangers, toggle bolts or screws. Set units plumb, level, and square at locations indicated, in accordance with manufacturer's instructions for type of substrate involved.

3.2 ADJUST AND CLEAN

A. Clean exposed surfaces of mirror units in compliance with manufacturer'srecommendations.

END OF SECTION 08 8300

SECTION 09 2900 - GYPSUM BOARD

PART 1 - GENERAL

1.1 SUMMARY

A. Section Includes:

1. Performance criteria for gypsum board assemblies.
2. Gypsum sheathing.
3. Cementitous backing board
4. Gypsum wallboard.
5. Joint treatment and accessories

1.2 RELATED REQUIREMENTS

A. Section 06 1000 - Rough Carpentry: Building framing and sheathing.

B. Section 06 1000 - Rough Carpentry: Wood blocking product and execution requirements.

C. Section 07 2500 - Weather Barriers: Water-resistive barrier over sheathing.

D. Section 07 8400 - Firestopping: Top-of-wall assemblies at fire rated walls.

E. Section 07 9200 - Joint Sealants

F. Section 09 3000 - Tiling (Tile): Tile backing board.

1.3 REFERENCE STANDARDS

A. ASTM C475/C475M - Standard Specification for Joint Compound and Joint Tape for Finishing Gypsum Board; 2002 (Reapproved 2007).

B. ASTM C514 - Standard Specification for Nails for the Application of Gypsum Board; 2004 (Reapproved 2009)e1.

C. ASTM C557 - Standard Specification for Adhesives for Fastening Gypsum Wallboard to Wood Framing; 2003 (Reapproved 2009)e1.

D. ASTM C665 - Standard Specification for Mineral-Fiber Blanket Thermal Insulation for Light Frame Construction and Manufactured Housing; 2006.

E. ASTM C840 - Standard Specification for Application and Finishing of Gypsum Board; 2008.

F. ASTM C1047 - Standard Specification for Accessories for Gypsum Wallboard and Gypsum Veneer Base; 2010a.

G. ASTM C1177/C1177M - Standard Specification for Glass Mat Gypsum Substrate for Use as Sheathing; 2008.

H. ASTM C1278/C1278M - Standard Specification for Fiber-Reinforced Gypsum Panel; 2007a.

I. ASTM C1280 - Standard Specification for Application of Gypsum Sheathing; 2009.

J. ASTM C1396/C1396M - Standard Specification for Gypsum Board; 2009a.

K. GA-216 - Application and Finishing of Gypsum Board; Gypsum Association; 2010.

L. UL (FRD) - Fire Resistance Directory; Underwriters Laboratories Inc.; current edition.

1.4 SUBMITTALS

A. Shop Drawings: Indicate special details associated with fireproofing and acoustic seals.

B. Product Data: Provide data on wood and metal framing, gypsum board, accessories, and joint finishing system.

PART 2 - PRODUCTS

2.1 MANUFACTURERS

A. Subject to compliance with requirements, products which may be incorporated in the work include, but are not limited to, the following:

1. James Hardie Building Products, Inc.
2. United States Gypsum Co.
3. Georgia-Pacific Corp.
4. Centex American Gypsum Co.
5. Domtar Gypsum Co.

2.2 GYPSUM BOARD ASSEMBLIES

A. Provide completed assemblies complying with ASTM C840 and GA-216.

B. Fire Rated Assemblies: Provide completed assemblies with the following characteristics:

1. ICC IBC Item Numbers: Comply with applicable requirements of ICC IBC for the particular assembly.
2. Gypsum Association File Numbers: Comply with requirements of GA-600 for the particular assembly.
3. UL Assembly Numbers: Provide construction equivalent to that listed for the particular assembly in the current UL Fire Resistance Directory.

2.3 METAL FRAMING MATERIALS

A. Non-Loadbearing Framing System Components: ASTM C645; galvanized sheet steel, of size and properties necessary to comply with ASTM C754 for the spacing indicated, with maximum deflection of wall framing of L/240 at 5 psf (240 Pa).

1. Studs: "C" shaped with flat or formed webs with knurled faces.
2. Runners: U shaped, sized to match studs.
3. Ceiling Channels: C shaped.
4. Furring: Hat-shaped sections, minimum depth of 7/8 inch (22 mm).
5. Resilient Furring Channels: 1/2 inch (12 mm) depth, for attachment to substrate through one leg only.

2.4 BOARD MATERIALS

A. Gypsum Wallboard: Paper-faced gypsum panels as defined in ASTM C1396/C1396M; sizes to minimize joints in place; ends square cut.

1. Application: Use for vertical surfaces and ceilings, unless otherwise indicated.
2. Mold Resistance: Score of 10, when tested in accordance with ASTM D3273.
3. Thickness:
   a. Vertical Surfaces: 5/8 inch (16 mm).
   b. Ceilings: 5/8 inch (16 mm).

B. Backing Board For Wet Areas: One of the following products:

1. Application: Surfaces behind tile in wet areas including tub and shower surrounds and shower ceilings.
2. Mold Resistance: Score of 10, when tested in accordance with ASTM D3273.
3. ANSI Cement-Based Board: Non-gypsum-based; aggregated Portland cement panels with glass fiber mesh embedded in front and back surfaces complying with ANSI A118.9 or ASTM C1325.
   a. Thickness: 5/8 inch (12.7 mm).

2.5 ACCESSORIES

A. Joint Materials: ASTM C475 and as recommended by gypsum board manufacturer for project conditions.

1. Tape: 2 inch (50 mm) wide, coated glass fiber tape for joints and corners, except as otherwise indicated.
2. Tape: 2 inch (50 mm) wide, creased paper tape for joints and corners, except as otherwise indicated.
3. Ready-mixed vinyl-based joint compound.
4. Powder-type vinyl-based joint compound.
5. Chemical hardening type compound.

B. B. Nails for Attachment to Wood Members: ASTM C514.

PART 3 - EXECUTION

3.1 EXAMINATION

A. Verify that project conditions are appropriate for work of this section to commence.

3.2 FRAMING INSTALLATION

A. Metal Framing: Install in accordance with ASTM C754 and manufacturer's instructions.

B. Suspended Ceilings and Soffits: Space framing and furring members as indicated.

C. Studs: Space studs as permitted by standard.

1. Extend partition framing to structure where indicated and to ceiling in other locations.
2. Partitions Terminating at Ceiling: Attach ceiling runner securely to ceiling track in accordance with manufacturer's instructions.

D. Standard Wall Furring: Install at concrete walls scheduled to receive gypsum board, not more than 4 inches (100 mm) from floor and ceiling lines and abutting walls. Secure in place on alternate channel flanges at maximum 24 inches (600 mm) on center.

1. Orientation: Horizontal.
2. Spacing: As indicated.

E. Blocking: Install wood blocking for support of:

1. Framed openings.
2. Wall mounted cabinets.
3. Plumbing fixtures.
4. Toilet partitions.
5. Toilet accessories.
6. Wall mounted door hardware.

3.3 BOARD INSTALLATION

A. Comply with ASTM C840, GA-216, and manufacturer's instructions. Install to minimize butt end joints, especially in highly visible locations

B. Fire-Rated Construction: Install gypsum board in strict compliance with requirements of assembly listing.

C. Installation on Wood Framing: For rated assemblies, comply with requirements of listing authority. For non-rated assemblies, install as follows:

3.4 INSTALLATION OF TRIM AND ACCCESSORIES

A. Control Joints: Place control joints consistent with lines of building spaces and as indicated.

B. Corner Beads: Install at external corners, using longest practical lengths.

C. Edge Trim: Install at locations where gypsum board abuts dissimilar materials and as indicated.

3.5 JOINT TREATMENT

A. Finish gypsum board in accordance with levels defined in ASTM C840, as follows:

1. Level 4: Walls and ceilings to receive semi-gloss or gloss paint finish and other areas specifically indicated.

B. Tape, fill, and sand exposed joints, edges, and corners to produce smooth surface ready to receive finishes.

1. Feather coats of joint compound so that camber is maximum 1/32 inch (0.8 mm).

3.6 TOLERANCES

A. Maximum Variation of Finished Gypsum Board Surface from True Flatness: 1/8 inch in 10 feet (3 mm in 3 m) in any direction.

3.7 PROTECTION

A. Protect installed products from damage from weather, condensation, direct sunlight, construction, and other causes during remainder of the construction period.

B. Remove and replace panels that are wet, moisture damaged, and mold damaged.

END OF SECTION 09 2900

SECTION 09 3000 - TILING

PART 1 - GENERAL

1.1 SECTION INCLUDES

A. Tile for floor applications

B. Tile for wall applications

C. Tile for shower receptors

D. Cementitious backer board as tile substrate

E. Stone Thresholds

F. Ceramic accessories

G. Ceramic trim

1.2 RELATED REQUIREMENTS.

A. Section 07 9200 - Joint Sealants.

B. Section 09 2900 - Gypsum Board: Assemblies.

1.3 REFERENCE STANDARDS

A. ANSI A108 Series/A118 Series/A136.1 - American National Standard Specifications for the Installation of Ceramic Tile (Compendium); 2009.

B. ANSI A108.8 - American National Standard Specifications for Installation of Ceramic Tile with Chemical Resistant Furan Resin Mortar and Grout; 1999 (R2005).

C. ANSI A108.9 - American National Standard Specifications for Installation of Ceramic Tile with Modified Epoxy Emulsion Mortar/Grout; 1999 (R2005).

D. ANSI A108.10 - American National Standard Specifications for Installation of Grout in Tilework; 1999 (R2005).

E. ANSI A108.11 - American National Standard for Interior Installation of Cementitious Backer Units; 1999 (R2005).

F. TCNA (HB) - Handbook for Ceramic Tile Installation; 2011.

1.4 SUBMITTALS

A. Product Data: Provide manufacturers' data sheets on tile, mortar, grout, and accessories. Include instructions for using grouts and adhesives.

B. Shop Drawings: Indicate tile layout, patterns, color arrangement, perimeter conditions, junctions with dissimilar materials, control and expansion joints, thresholds, ceramic accessories, and setting details.

C. Samples: Mount tile and apply grout on two plywood panels, minimum 18 x 18 inches (450 x 450 mm) in size illustrating pattern, color variations, and grout joint size variations.

D. Manufacturer's Certificate: Certify that products meet or exceed specified requirements.

E. Maintenance Data: Include recommended cleaning methods, cleaning materials, stain removal methods, and polishes and waxes.

1.5 QUALITY ASSURANCE

A. Installer Qualifications: Company specializing in performing tile installation, with minimum of 5 years of documented experience.

PART 2 - PRODUCTS

2.1 TILE

A. Glazed Wall Tile : ANSI A137.1 , and as follows:

1. Moisture Absorption: 3.0 to 7.0 percent.
2. Size and Shape: 6 inch (150 mm) square.
3. Edges: Cushioned.
4. Surface Finish: High gloss.
5. Colors: As scheduled.
6. Trim Units: Matching bead, bullnose, cove, and base shapes in sizes coordinated with field tile.

2.2 TRIM AND ACCESSORIES

A. Ceramic Accessories: Glazed finish, same color and finish as adjacent field tile; same manufacturer as tile.

B. Ceramic Trim: Matching bullnose, double bullnose, cove base, and cove ceramic shapes in sizes coordinated with field tile.

1. Manufacturer: Same as for tile.

C. Thresholds: Marble, white or gray, honed finish; 2 inches (50 mm) wide by full width of wall or frame opening; 1/2 inch (12 mm) thick; beveled one long edge with radiused corners on top side; without holes, cracks, or open seams.

2.3 ADHESIVE MATERIALS

A. Tile Setting Adhesive: Elastomeric, waterproof, liquid applied, _____.

2.4 GROUT MATERIALS

A. Standard Grout: Any type specified in ANSI A118.6 or A118.7.

1. Colors: As scheduled.

2.5 ACCESSSORIES MATERIALS

A. Cementitious Backer Board: ANSI A118.9; High density, cementitious, glass fiber reinforced, 1/2 inch (13 mm) thick; 2 inch (50 mm) wide coated glass fiber tape for joints and corners.

PART 3 - EXECUTION

3.1 EXAMINATION

A. Verify that sub-floor surfaces are smooth and flat within the tolerances specified for that type of work and are ready to receive tile.

B. Verify that wall surfaces are smooth and flat within the tolerances specified for that type of work, are dust-free, and are ready to receive tile.

C. Verify that concrete sub-floor surfaces are ready for tile installation by testing for moisture emission rate and alkalinity; obtain instructions if test results are not within limits recommended by tile manufacturer and setting materials manufacturer.

D. Verify that required floor-mounted utilities are in correct location.

3.2 PREPARATION

A. Protect surrounding work from damage.

B. Vacuum clean surfaces and damp clean.

C. Seal substrate surface cracks with filler. Level existing substrate surfaces to acceptable flatness tolerances.

D. Install cementitious backer board in accordance with ANSI A108.11 and board manufacturer's instructions. Tape joints and corners, cover with skim coat of dry-set mortar to a feather edge.

3.3 INSTALLATION -GENERAL

A. Install tile, thresholds, and stair treads and grout in accordance with applicable requirements of ANSI A108.1 through A108.13, manufacturer's instructions, and The Tile Council of North America Handbook recommendations.

B. Lay tile to pattern indicated. Do not interrupt tile pattern through openings.

C. Cut and fit tile to penetrations through tile, leaving sealant joint space. Form corners and bases neatly. Align floor joints.

D. Place tile joints uniform in width, subject to variance in tolerance allowed in tile size. Make joints watertight, without voids, cracks, excess mortar, or excess grout.

E. Form internal angles square and external angles bullnosed.

F. Install ceramic accessories rigidly in prepared openings.

G. Install thresholds where indicated.

H. Sound tile after setting. Replace hollow sounding units.

I. Keep expansion joints free of adhesive or grout. Apply sealant to joints.

J. Allow tile to set for a minimum of 48 hours prior to grouting.

K. Grout tile joints. Use standard grout unless otherwise indicated.

L. Apply sealant to junction of tile and dissimilar materials and junction of dissimilar planes.

3.4 INSTALLATION – FLOORS – THIN-SET METHODS

A. Over interior concrete substrates, install in accordance with The Tile Council of North America Handbook Method F113, dry-set or latex-Portland cement bond coat, with standard grout, unless otherwise indicated.

B. Over wood substrates, install in accordance with The Tile Council of North America Handbook Method F142, with standard grout, unless otherwise indicated.

3.5 INSTALLATION – WALL TILE

A. On exterior walls install in accordance with The Tile Council of North America Handbook Method W244, thin-set over cementitious backer units, with waterproofing membrane.

B. Over cementitious backer units on studs, install in accordance with The Tile Council of North America Handbook Method W244, using membrane at toilet rooms.

3.6 CLEANING

A. Clean tile and grout surfaces.

3.7 PROTECTION

A. Do not permit traffic over finished floor surface for 4 days after installation.

END OF SECTION 09 3000

SECTION 09 6519 - RESILIENT TILE FLOORING

PART 1 - GENERAL

1.1 RELATED DOCUMENTS

A. Drawings and general provisions of the Contract, including General and Supplementary Conditions and Division 01 Specification Sections, apply to this Section.

1.2 SUMMARY

A. Section Includes:

1. Solid vinyl floor tile.

1.3 ACTION SUBMITTALS

A. Product Data: For each type of product.

B. Shop Drawings: For each type of floor tile. Include floor tile layouts, edges, columns, doorways, enclosing partitions, built-in furniture, cabinets, and cutouts.

1. Show details of special patterns.

C. Samples: Full-size units of each color and pattern of floor tile required.

D. Product Schedule: For floor tile.

1.4 MAINTENANCE MATERIAL SUBMITTALS

A. Furnish extra materials that match products installed and that are packaged with protective covering for storage and identified with labels describing contents.

B. Floor Tile: Furnish one box for every 50 boxes or fraction thereof, of each type, color, and pattern of floor tile installed.

1.5 QUALITY ASSURANCE

A. Installer Qualifications: A qualified installer with a minimum of 5 years commercial resilient flooring installation experience, and who employs workers for this Project who are competent in techniques required by manufacturer for floor tile installation and seaming method indicated.

1. Engage an installer who employs workers for this Project who are trained or certified by floor tile manufacturer for installation techniques required.

B. Mockups: Build mockups to verify selections made under Sample submittals and to demonstrate aesthetic effects and set quality standards for materials and execution.

1. Build mockups for floor tile including resilient base and accessories.
   a. Size: Minimum 100 sq. ft. for each type, color, and pattern
2. Approval of mockups does not constitute approval of deviations from the Contract Documents contained in mockups unless Architect specifically approves such deviations in writing.

1.6 DELIVERY, STORAGE, AND HANDLING

A. Store floor tile and installation materials in dry spaces protected from the weather, with ambient temperatures maintained within range recommended by manufacturer, but not less than 50 deg F (10 deg C) or more than 90 deg F (32 deg C). Store floor tiles on flat surfaces.

1.7 FIELD CONDITIONS

A. HVAC system should be operational and running for a minimum of 7 days prior to resilient tile installation and remain running after resilient tile installation.

B. Maintain ambient temperatures within range recommended by manufacturer, but not less than 65 deg F (18 deg C) or more than 85 deg F (29 deg C), in spaces to receive floor tile during the following time periods:

1. 48 hours before installation.
2. During installation.
3. Permanently after installation.

C. Close spaces to traffic during floor tile installation.

D. Close spaces to traffic, all heavy rolling loads, and point loads for 48 to 72 hours after floor tile installation.

E. Install floor tile after other finishing operations, including painting, have been completed.

1.8 WARRANTY

A. Refer to http://www.mohawkflooring.com for detailed warranty information for Mowhawk products.

B. Special Warranty for Resilient Tile; Manufacturer agrees to repair or replace defective material within specified warranty period.

1. Warranty does not include installer's workmanship.
2. Resilient tile must be installed and maintained according to manufacturer's recommendations.
3. Warranty Period:
   a. Manufacturing Defects Warranty: [7] years.
   b. Limited Commercial Wear Warranty: [7] years.

PART 2 - PRODUCTS

2.1 PERFORMANCE REQUIREMENTS

A. Fire-Test-Response Characteristics: For resilient floor tile, as determined by testing identical products according to ASTM E 648 or NFPA 253 by a qualified testing agency.

1. Critical Radiant Flux Classification: Class I, not less than 0.45 W/sq. cm.

2.2 SOLID VINYL FLOOR TILE <**Insert drawing designation**>

A. Basis-of-Design Product: Subject to compliance with requirements, provide Mohawk; World's Fair 12mil or comparable product by one of the following:

1. Mohawk Floors

B. Tile Standard: ASTM F 1700.

1. Class: [**Class III, Printed Film Vinyl Tile**].
2. Type: [**B, Embossed Surface**].

C. Thickness: 2.0 mm .

D. Wear Layer Thickness: 12 mi

E. Size: per ID drawings .

2.3 INSTALLATION MATERIALS

A. Trowelable Leveling and Patching Compounds: Latex-modified, portland cement based or blended hydraulic-cement-based formulation provided or approved by floor tile manufacturer for applications indicated.

B. Adhesives: Water-resistant type recommended by floor tile and adhesive manufacturers to suit floor tile and substrate conditions indicated.

PART 3 - EXECUTION

3.1 EXAMINATION

A. Examine substrates, with Installer present, for compliance with requirements for maximum moisture content and other conditions affecting performance of the Work.

1. Verify that finishes of substrates comply with tolerances and other requirements specified in other Sections and that substrates are free of cracks, ridges, depressions, scale, and foreign deposits that might interfere with adhesion of floor tile.

B. Proceed with installation only after unsatisfactory conditions have been corrected.

3.2 PREPARATION

A. Prepare substrates according to floor tile manufacturer's written instructions to ensure adhesion of resilient products.

B. Concrete Substrates: Prepare according to ASTM F 710.

1. Verify that substrates are dry and free of curing compounds, sealers, and hardeners.
2. Remove substrate coatings and other substances that are incompatible with adhesives and that contain soap, wax, oil, or silicone, using mechanical methods recommended by floor tile manufacturer. Do not use solvents.
3. Alkalinity and Adhesion Testing: Perform tests recommended by floor tile manufacturer. Proceed with installation only after substrate alkalinity falls within range on pH scale recommended by manufacturer in writing, but not less than 5 or more than [**9**] pH.
4. Moisture Testing: Proceed with installation only after substrates pass testing according to floor tile manufacturer's written recommendations, but not less stringent than the following:
   a. Perform relative humidity test using in situ probes according to ASTM F 2170. Proceed with installation only after substrates are below 90 percent relative humidity level.

C. Fill cracks, holes, and depressions in substrates with trowelable leveling and patching compound; remove bumps and ridges to produce a uniform and smooth substrate.

D. Do not install floor tiles until they are the same temperature as the space where they are to be installed.

1. At least 48 hours in advance of installation, move resilient floor tile and installation materials into spaces where they will be installed.

3.3 FLOOR TILE INSTALLATION

A. Comply with manufacturer's written instructions for installing floor tile.

B. Lay out floor tiles from center marks established with principal walls, discounting minor offsets, so tiles at opposite edges of room are of equal width. Adjust as necessary to avoid using cut widths that equal less than one-half tile at perimeter.

1. Lay tiles per ID recommendations .

C. Match floor tiles for color and pattern by selecting tiles from cartons in the same sequence as manufactured and packaged, if so numbered. Discard broken, cracked, chipped, or deformed tiles.

1. Lay tiles per ID recommendations .

D. Scribe, cut, and fit floor tiles to butt neatly and tightly to vertical surfaces and permanent fixtures including built-in furniture, cabinets, pipes, outlets, and door frames.

E. Extend floor tiles into toe spaces, door reveals, closets, and similar openings. Extend floor tiles to center of door openings.

F. Maintain reference markers, holes, and openings that are in place or marked for future cutting by repeating on floor tiles as marked on substrates. Use chalk or other nonpermanent marking device.

3.4 CLEANING AND PROTECTION

A. Comply with manufacturer's written instructions for cleaning and protecting floor tile.

B. Perform the following operations immediately after completing floor tile installation:

1. Remove adhesive and other blemishes from exposed surfaces.
2. Sweep and vacuum surfaces thoroughly.
3. Damp-mop surfaces to remove marks and soil.

C. Protect floor tile from mars, marks, indentations, and other damage from construction operations and placement of equipment and fixtures during remainder of construction period.

D. Cover floor tile until Substantial Completion.

END OF SECTION 09 6519

SECTION 09 9100 - PAINTING

PART 1 - GENERAL

1.1 SECTION INCLUDES

A. Surface preparation

B. Field application of paints, stains, varnishes, and other coatings.

C. Surfaces to be finished are indicated in this section and on the Drawings.

1.2 RELATED REQUIREMENTS

A. Section 05 5000 - Metal Fabrications: Shop-primed items.

B. Section 05 5100 - Metal Stairs: Shop-primed items.

1.3 REFERENCE STANDARDS

A. 40 CFR 59, Subpart D - National Volatile Organic Compound Emission Standards for Architectural Coatings; U.S. Environmental Protection Agency; current edition.

B. GreenSeal GS-11 - Architectural Paints; 1993.

C. MPI (APL) - Master Painters Institute Approved Products List; Master Painters and Decorators Association; current edition, www.paintinfo.com.

D. MPI (APSM) - Master Painters Institute Architectural Painting Specification Manual; Master Painters and Decorators Association; 2004.

1.4 SUBMITTALS

A. Product Data: Provide complete list of all products to be used, with the following information for each:

1. Manufacturer's name, product name and/or catalog number, and general product category (e.g. "alkyd enamel").
2. MPI product number (e.g. MPI #47).
3. Cross-reference to specified paint system(s) product is to be used in; include description of each system (copy of relevant MPI Manual page is acceptable).

B. Certification by manufacturer that products comply with Contract Documents and are compatible with applicable substrates and with each other.

C. Certification: By manufacturer that all paints and coatings comply with VOC limits specified

D. Samples: Submit three paper "drop" samples, 8-1/2 by 11 inches (216 by 279 mm) in size, illustrating range of colors available for each finishing product specified.

1. Where sheen is specified, submit samples in only that sheen.

1.5 QUALITY ASSURANCE

A. Material Safety Data Sheets: At project site maintain file of MSDS sheets for each product used; become familiar with and follow manufacturer's stated application and safety requirements.

1.6 DELIVERY, STORAGE AND HANDLING

A. Deliver products to site in sealed and labeled containers; inspect to verify acceptability.

B. Container Label: Include manufacturer's name, type of paint, brand name, lot number, brand code, coverage, surface preparation, drying time, cleanup requirements, color designation, and instructions for mixing and reducing.

C. Paint Materials: Store at minimum ambient temperature of 45 degrees F (7 degrees C) and a maximum of 90 degrees F (32 degrees C), in ventilated area, and as required by manufacturer's instructions.

1.7 FIELD CONDITIONS

A. Do not apply materials when surface and ambient temperatures are outside the temperature ranges required by the paint product manufacturer.

B. Follow manufacturer's recommended procedures for producing best results, including testing of substrates, moisture in substrates, and humidity and temperature limitations.

PART 2 - PRODUCTS

2.1 MANUFACTURERS

A. Provide all paint and coating products used in any individual system from the same manufacturer; no exceptions.

B. Provide all paint and coating products from the same manufacturer to the greatest extent possible.

C. Acceptable Manufacturer: Sherman Williams www.sherwin-williams.com/

2.2 MATERIALS – GENERAL

A. Volatile Organic Compound (VOC) Content:

1. Provide coatings that comply with the most stringent requirements specified in the following:
   a. 40 CFR 59, Subpart D--National Volatile Organic Compound Emission Standards for Architectural Coatings.
2. Determination of VOC Content: Testing and calculation in accordance with 40 CFR 59, Subpart D (EPA Method 24), exclusive of colorants added to a tint base and water added at project site; or other method acceptable to authorities having jurisdiction.

B. Paints and Coatings: Provide products listed in Master Painters Institute Approved Product List, current edition available at www.paintinfo.com, for specified MPI Categories, except as otherwise indicated.

1. Provide ready mixed paints and coatings , except field-catalyzed coatings.
2. Provide materials that are compatible with one another and the substrates indicated under conditions of service and application, as demonstrated by manufacturer based on testing and field experience.

2.3 PAINT SYSTEMS

A. Provide Premium Grade systems (2 top coats) as defined in MPI Architectural Painting Specification Manual, except as otherwise indicated.

B. Where a specified paint system does not have a Premium Grade, provide Custom Grade system.

2.4 EXTERIOR PAINT SYSTEMS

A. Asphalt Paving Marking:

1. EXT 2.1A Latex Zone/Traffic Marking: MPI #97.

B. Concrete Masonry Units:

1. _____: EXT 4.2A Latex: Block Filler MPI #4, Latex MPI #10, 11, 15 or 119.

2.5 INTERIOR PAINT SYSTEMS

A. Plaster and Gypsum Board:

1. Applications include but are not limited to walls, ceilings, soffits, and bulkheads.

PART 3 - EXECUTION

3.1 SCOPE – SURFACE TO BE FINISHED

A. Paint all exposed surfaces except where indicated not to be painted or to remain natural; the term "exposed" includes areas visible through permanent and built-in fixtures when they are in place.

B. Paint the surfaces described in PART 2, indicated on the Drawings, and as follows:

1. If a surface, material, or item is not specifically mentioned, paint in the same manner as similar surfaces, materials, or items, regardless of whether colors are indicated or not.
2. Paint surfaces behind movable equipment and furnishings the same as similar exposed surfaces.
3. Paint surfaces to be concealed behind permanently installed fixtures, equipment, and furnishings, using primer only, prior to installation of the permanent item.
4. Paint back sides of access panels and removable and hinged covers to match exposed surfaces.
5. Finish top, bottom, and side edges of exterior doors the same as exposed faces.
6. Paint interior surfaces of air ducts and convector and baseboard heating cabinets with flat, nonspecular black paint where visible through registers, grilles, or louvers.
7. Paint dampers exposed behind louvers, grilles, and convector and baseboard cabinets to match face panels

C. Do Not Paint or Finish the Following Items:

1. Items fully factory-finished unless specifically noted; factory-primed items are not considered factory-finished.
2. Items indicated to receive other finish.
3. Items indicated to remain naturally finished.
4. Fire rating labels, equipment serial number and capacity labels, and operating parts of equipment.

3.2 EXAMINATION

A. Verify that surfaces are ready to receive Work as instructed by the product manufacturer.

B. Examine surfaces scheduled to be finished prior to commencement of work. Report any condition that may potentially affect proper application.

C. Test shop-applied primer for compatibility with subsequent cover materials; report incompatible primer conditions and submit recommended changes for Architect's approval.

D. Measure moisture content of surfaces using an electronic moisture meter. Do not apply finishes unless moisture content of surfaces are below the following maximums:

1. Plaster and Gypsum Board: 12 percent.
2. Masonry, Concrete, and Concrete Unit Masonry: 12 percent.

E. Measure the ph factor of concrete, masonry, and mortar before starting any finishing process, using the method specified in MPI Architectural Painting Manual.

1. Report results in writing to Architect before starting work.
2. If results of test indicates need for remedial action, provide written description of remedial action. If a different primer or paint systems is required, state the total cost of the change. Do not proceed with remedial action or change without receiving written authorization from Architect.

3.3 PREPARATION

A. Prepare surfaces as specified in MPI Architectural Painting Specification Manual and as follows for the applicable surface and coating; if multiple preparation treatments are specified, use as many as necessary for best results; where the Manual references external standards for preparation (e.g. SSPC standards), prepare as specified in those standards; comply with coating manufacturer's specific preparation methods or treatments, if any.

B. Coordinate painting work with cleaning and preparation work so that dust and other contaminants do not fall on newly painted, wet surfaces.

C. Surface Appurtenances: Prior to preparing surfaces or finishing, remove electrical plates, hardware, light fixtures, light fixture trim, escutcheons, machined surfaces, fittings, and similar items already installed that are not to be painted.

1. If removal is impractical or impossible because of the size or weight of the item, provide surface-applied protection before preparation and finishing.
2. After completing painting in each space or area, reinstall items removed using workers skilled in the trades involved.

D. Surfaces: Correct defects and clean surfaces which affect work of this section. Remove or repair existing coatings that exhibit surface defects.

E. Marks: Seal with shellac those which may bleed through surface finishes.

F. Impervious Surfaces: Remove mildew by scrubbing with solution of tetra-sodium phosphate and bleach. Rinse with clean water and allow surface to dry.

G. Concrete, Cement Plaster and Unit Masonry Surfaces to be Painted: Remove dirt, loose mortar, scale, salt or alkali powder, and other foreign matter. Remove oil and grease with a solution of tri-sodium phosphate; rinse well and allow to dry. Remove stains caused by weathering of corroding metals with a solution of sodium metasilicate after thoroughly wetting with water. Allow to dry.

1. Prepare concrete, concrete masonry block, cement plaster, and mineral-fiber-reinforced cement panel surfaces to be painted. Remove efflorescence, chalk, dust, dirt, grease, oils, and release agents. Roughen as required to remove glaze. If hardeners or sealers have been used to improve curing, use mechanical methods of surface preparation.
2. Use abrasive blast-cleaning methods if recommended by paint manufacturer

H. Gypsum Board Surfaces to be Painted: Fill minor defects with filler compound. Spot prime defects after repair.

I. Plaster Surfaces to be Painted: Fill hairline cracks, small holes, and imperfections with latex patching plaster. Make smooth and flush with adjacent surfaces. Wash and neutralize high alkali surfaces.

3.4 APPLICATION

A. Apply products in accordance with manufacturer's instructions and as specified or recommended by MPI Manual, using the preparation, products, sheens, textures, and colors as indicated.

1. Remove, refinish, or repaint work not complying with requirements.

B. Do not apply finishes over dirt, rust, scale, grease, moisture, scuffed surfaces, or other conditions detrimental to formation of a durable coating film; do not apply finishes to surfaces that are not dry.

C. Use applicators and methods best suited for substrate and type of material being applied and according to manufacturer's instructions.

1. Brush Application: Use brushes best suited for the type of material applied; use brush of appropriate size for the surface or item being painted; produce results free of visible brush marks.
2. Roller Application: Use rollers of carpet, velvet back, or high-pile sheep's wool as recommended by manufacturer for material and texture required.
3. Spray Application: Use airless spray equipment with orifice size as recommended by manufacturer for material and texture required
4. Where application method is listed in the MPI Manual for the paint system that application method is required; otherwise any application method recommended by manufacturer for material used and objects to be painted is acceptable.

D. Minimum Coating Thickness: Apply paint materials no thinner than manufacturer's recommended spreading rate; provide total dry film thickness of entire system as recommended by manufacturer.

1. Number of coats and film thickness required are the same regardless of application method.
2. If undercoats, stains, or other conditions show through final coat of paint, apply additional coats until paint film is of uniform finish, color, and appearance.
3. Give special attention to ensure edges, corners, crevices, welds, and exposed fasteners receive dry film thickness equivalent to that of flat surfaces.

E. Apply finish to completely cover surfaces with uniform appearance without brush marks, runs, sags, laps, ropiness, holidays, spotting, cloudiness, or other surface imperfections.

1. Before applying finish coats, apply a prime coat of material recommended by manufacturer, unless the surface has been prime coated by others; where evidence of suction spots or unsealed areas in first coat appear, recoat primed and sealed surfaces to ensure finish coat with no burn through or other defects due to insufficient sealing.
2. Apply first coat to surface that has been cleaned, pretreated, or otherwise prepared as soon as practical after preparation and before subsequent surface deterioration.
3. Do not apply succeeding coats until the previous coat has cured as recommended by manufacturer.
4. Do not recoat until paint has dried to where it feels firm, does not deform or feel sticky under moderate thumb pressure, and application of another coat will not cause the undercoat to lift or lose adhesion.
5. If manufacturer's instructions recommend sanding to produce a smooth, even surface, sand between coats.

6. Before applying next coat vacuum clean surfaces of loose particles. Use tack cloth to remove dust and particles just prior to applying next coat.

3.5 FIELD QUALITY CONTROL

A. See Section 01 4000 - Quality Requirements, for general requirements for field inspection.

3.6 CLEANING AND PROTECTION

A. Collect waste material which may constitute a fire hazard, place in closed metal containers, and remove daily from site.

B. At the end of each workday, remove empty cans, rags, rubbish, and other discarded paint materials from site.

C. Protect other work, whether being painted or not, against damage by painting. Correct damage by cleaning, repairing or replacing, and repainting as approved by Architect.

D. Provide "Wet Paint" signs to protect newly painted finishes. Remove temporary protective wrappings provided by others to protect their work after completing painting operations.

E. At completion of construction activities of other trades, touch up and restore damaged or defaced painted surfaces. Comply with procedures specified in MPI Manual.

END OF SECTION 09 9100

SECTION 10 2800 - TOILET, BATH, AND LAUNDRY ACCESSORIES

PART 1 - GENERAL

1.1 RELATED DOCUMENTS

A. Drawings and general provisions of the Contract, including General and Supplementary Conditions and Division 1 Specification Sections, apply to this Section.

1.2 SECTION INCLUDES

A. Towel Racks

B. Shower Rods

C. Toilet Tissue Holders

D. Grab Bars

E. Soap Dispensers

F. Robe Hooks

G. Bath Safety Benches

1.3 SUBMITTALS

A. Product Data: Show in detail construction, dimensions, methods of installation, joining and fastening and finishes.

PART 2 - PRODUCTS

2.1 MANUFACTURERS

A. Subject to compliance with requirments specified, provide products from :

1. American Bathroom Accessorites, Inc.
2. Basco, Inc.
3. Franklin Brass Manaufacturing Co.
4. General Accessory Manufacturing Co. (GAMCO).
5. Ginger, GUSA, Inc.
6. Seachrome Corporation.
7. Berger & Bobrick Products

2.2 ACCESSORIES

A. Apartment Units

1. Provide Bathroom Accessories, for each apartment unit in accordance with Unit Drawings.

B. Public Restrooms

1. Provide Bathroom Accessories, for each apartment unit in accordance with Drawings.

PART 3 - EXECUTION

3.1 INSTALLATION

A. Install bath accessories where required by the Contract Documents, rigidly secure with proper fasteners in compliance with manufacturer's recommendations. The finish on exposed fasteners shall match the item.

B. Installed grab bars shall support a 400 pound sustained load.

END OF SECTION 10 2800

SECTION 10 4413 - FIRE PROTECTION CABINETS

PART 1 - GENERAL

1.1 SUMMARY

A. Section Includes:

1. Fire-protection cabinets for portable fire extinguishers.

1.2 ACTION SUBMITTALS

A. Product Data: For each type of product.

B. Shop Drawings: For fire-protection cabinets.

1.3 CLOSEOUT SUBMITTALS

A. Maintenance data.

1.4 COORDINATION

A. Coordinate size of fire-protection cabinets to ensure that type and capacity of fire extinguishers indicated are accommodated.

B. Coordinate sizes and locations of fire-protection cabinets with wall depths.

1.5 SEQUENCING

A. Apply [decals] [vinyl lettering] on field-painted fire-protection cabinets after painting is complete.

PART 2 - PRODUCTS

2.1 PERFORMANCE REQUIREMENTS

A. Fire-Rated Fire-Protection Cabinets: Listed and labeled to comply with requirements in ASTM E814 for fire-resistance rating of walls where they are installed.

2.2 FIRE-PROTECTION CABINET

A. Cabinet Type: Suitable for fire extinguisher.

1. Products: Subject to compliance with requirements, available products that may be incorporated into the Work include, but are not limited to, the following:
2. Basis-of-Design Product: Subject to compliance with requirements, provide comparable product by one of the following:
   a. Fire-End & Croker Corporation.

B. Cabinet Construction: [**One-hour fire rated**] .

1. Fire-Rated Cabinets: Construct fire-rated cabinets with double walls fabricated from 0.043-inch- (1.09-mm-) thick cold-rolled steel sheet lined with minimum 5/8-inch- (16-mm-) thick fire-barrier material. Provide factory-drilled mounting holes.

C. Cabinet Material: [**Cold-rolled steel sheet**] .

D. Recessed Cabinet:

1. Trimless with Concealed Flange: Surface of surrounding wall finishes flush with exterior finished surface of cabinet frame and door, without overlapping trim attached to cabinet. Provide recessed flange, of same material as box, attached to box, to act as [**drywall bead**].
2. Trimless with Hidden Flange: Flange of same metal and finish as box overlaps surrounding wall finish and is concealed from view by an overlapping door.
3. Exposed Flat Trim: One-piece combination trim and perimeter door frame overlapping surrounding wall surface, with exposed trim face and wall return at outer edge (backbend).

E. Semirecessed Cabinet: One-piece combination trim and perimeter door frame overlapping surrounding wall surface, with exposed trim face and wall return at outer edge (backbend).

1. Square-Edge Trim: 1-1/4- to 1-1/2-inch (32- to 38-mm) backbend depth.
2. Rolled-Edge Trim: [**2-1/2-inch (64-mm)**] backbend depth.

F. Surface-Mounted Cabinet: Cabinet box fully exposed and mounted directly on wall with no trim.

G. Cabinet Trim Material: [**Steel sheet**] .

H. Door Material: [**Steel sheet**] .

I. Door Style: [**Fully glazed, frameless, backless, acrylic panel**] .

J. Door Glazing: Break Glass

1. Break Glass: Clear annealed float glass, ASTM C 1036, Type I, Class 1, Quality q3, 1.5 mm thick, single strength.

2.3 FABRICATION

A. Fire-Protection Cabinets: Provide manufacturer's standard box (tub) with trim, frame, door, and hardware to suit cabinet type, trim style, and door style indicated.

PART 3 - EXECUTION

3.1 INSTALLATION

A. Prepare recesses for [**recessed**] fire-protection cabinets as required by type and size of cabinet and trim style.

B. Install fire-protection cabinets in locations and at mounting heights indicated [**or, if not indicated, at heights acceptable to authorities having jurisdiction**]. Maximum separation between two units is 150' along centerline of corridor.

C. Fire-Protection Cabinets: Fasten cabinets to structure, square and plumb.

D. Identification: Apply [**vinyl lettering**] at locations indicated.

E. Adjust fire-protection cabinet doors to operate easily without binding. Verify that integral locking devices operate properly.

END OF SECTION 10 4413

SECTION 10 4416 - FIRE EXTINGUISHERS

PART 1 - GENERAL

1.1 SUMMARY

A. Section includes portable, hand-carried fire extinguishers [**and mounting brackets for fire extinguishers**].

1.2 ACTION SUBMITTALS

A. Product Data: For each type of product.

1.3 INFORMATIONAL SUBMITTALS

A. Warranty: Sample of special warranty.

1.4 CLOSEOUT SUBMITTALS

A. Operation and maintenance data.

1.5 COORDINATION

A. Coordinate type and capacity of fire extinguishers with fire-protection cabinets to ensure fit and function.

1.6 WARRANTY

A. Special Warranty: Manufacturer's standard form in which manufacturer agrees to repair or replace fire extinguishers that fail in materials or workmanship within specified warranty period.

1. Warranty Period: [**Six**] years from date of Substantial Completion.

PART 2 - PRODUCTS

2.1 PERFORMANCE REQUIREMENTS

A. NFPA Compliance: Fabricate and label fire extinguishers to comply with NFPA 10, "Portable Fire Extinguishers."

B. Fire Extinguishers: Listed and labeled for type, rating, and classification by an independent testing agency acceptable to authorities having jurisdiction.

2.2 PORTABLE, HAND-CARRIED FIRE EXTINGUISHERS

A. Fire Extinguishers: Type, size, and capacity for each [**fire-protection cabinet**] [**and**] [**mounting bracket**] indicated.

1. Manufacturers: Subject to compliance with requirements, available manufacturers offering products that may be incorporated into the Work include, but are not limited to, the following:
2. Basis-of-Design Product: Subject to compliance with requirements, provide omparable product by one of the following:
   a. Amerex Corporation.
   b. Ansul Incorporated.
   c. Badger Fire Protection.
   d. Buckeye Fire Equipment Company.
   e. Fire End & Croker Corporation.
   f. Guardian Fire Equipment, Inc.
   g. JL Industries, Inc.; a division of the Activar Construction Products Group.
   h. Kidde Residential and Commercial Division; Subsidiary of Kidde plc.
   i. Larsens Manufacturing Company.
   j. Moon American.
   k. Nystrom Building Products.
   l. Pem All Fire Extinguisher Corp.
   m. Potter Roemer LLC.
   n. Pyro-Chem; Tyco Safety Products.
   o. Strike First Corporation of America.
3. Instruction Labels: Include pictorial marking system complying with NFPA 10, Appendix B.

B. Stored-Pressure Water Type <**Insert drawing designation**>: UL-rated 2-A, 2.5-gal. (9.5-L) nominal capacity, with water in stainless-steel container; with pressure-indicating gage.

2.3 MOUNTING BRACKETS <**Insert drawing designation**>

A. Mounting Brackets: Manufacturer's standard [**galvanized**] steel, designed to secure fire extinguisher to wall or structure, of sizes required for types and capacities of fire extinguishers indicated, with plated or [**red**] baked-enamel finish.

1. Manufacturers: Subject to compliance with requirements, available manufacturers offering products that may be incorporated into the Work include, but are not limited to, the following:
2. Basis-of-Design Product: Subject to compliance with requirements, provide comparable product by one of the following:
   a. Amerex Corporation.
   b. Ansul Incorporated.
   c. Badger Fire Protection.
   d. Buckeye Fire Equipment Company.

e. Fire End & Croker Corporation.
f. Guardian Fire Equipment, Inc.
g. JL Industries, Inc.; a division of the Activar Construction Products Group.
h. Larsens Manufacturing Company.
i. Nystrom Building Products.
j. Potter Roemer LLC.
k. Strike First Corporation of America.

B. Identification: Lettering complying with authorities having jurisdiction for letter style, size, spacing, and location. Locate as indicated by Architect.

1. Identify bracket-mounted fire extinguishers with the words "FIRE EXTINGUISHER" in red letter decals applied to mounting surface.
a. Orientation: [**Vertical**] .

PART 3 - EXECUTION

3.1 INSTALLATION

A. Examine fire extinguishers for proper charging and tagging.

1. Remove and replace damaged, defective, or undercharged fire extinguishers.

B. Install fire extinguishers and mounting brackets in locations indicated and in compliance with requirements of authorities having jurisdiction. Maximum separation between two units is 150' along centerline of corridor.

1. Mounting Brackets: [4 inches above finished floor to top of fire extinguisher.

C. Mounting Brackets: Fasten mounting brackets to surfaces, square and plumb, at locations indicated.

END OF SECTION 10 4416

SECTION 10 5500.13 - USPS-DELIVERY POSTAL SPECIALTIES

PART 1 - GENERAL

1.1 SUMMARY

A. Section Includes:

1. Mail receptacles.
2. Cluster box units.
3. Parcel lockers.
4. Collection boxes.
5. Accessories.

1.2 ACTION SUBMITTALS

A. Product Data: For each type of product.

B. Shop Drawings: For postal specialties. Include plans, elevations, sections, and attachment details.

C. Samples: For each type of exposed finish.

1.3 INFORMATIONAL SUBMITTALS

A. Sample warranty.

1.4 DELIVERY, STORAGE, AND HANDLING

A. Furnish lock keys according to USPS requirements; with temporary identification for their respective locks, bagged, and securely taped inside the collection compartment for shipping.

1.5 WARRANTY

A. Special Warranty: Manufacturer agrees to repair or replace components of postal specialties that fail in materials or workmanship within specified warranty period.

1. Warranty Period: [**Five**] years from date of Substantial Completion.

PART 2 - PRODUCTS

2.1 MAIL RECEPTACLES

A. Front-Loading Mail Receptacles : USPS-STD-4C; consisting of multiple compartments with fixed, solid compartment backs, enclosed within a recessed wall box.

1. Manufacturers: Subject to compliance with requirements, available manufacturers offering products that may be incorporated into the Work include, but are not limited to, the following:
2. Basis-of-Design Product: Subject to compliance with requirements, provide comparable product by one of the following:
   a. Salsbury Industries
3. Front-Loading Master Door: Fabricated from extruded aluminum and braced and framed to hold compartment doors; prepared to receive master-door lock.
   a. Master-Door Lock: Door prepared to receive lock provided by local postmaster.
4. Compartments: As indicated on Civil Drawings.

2.2 ACCESSORIES

A. Key Keeper : Consisting of single compartment with door; interior compartment size not less than [**4-3/4 inches wide by 2-1/4 inches high by 1-1/2 inches deep**] , USPS approved.

1. Manufacturers: Subject to compliance with requirements, available manufacturers offering products that may be incorporated into the Work include, but are not limited to, the following:
2. Basis-of-Design Product: Subject to compliance with requirements, provide comparable product by one of the following:
   a. Salsbury Industries
3. Mounting: [**Recessed**] .
4. Style: Compartment door [**set within face frame**] .
5. Type of Operation: [**Loose key in box**] .
6. Door Lock: Door prepared to receive lock furnished by local postmaster.
7. Exposed Materials:
   a. Anodic Finish: [**Clear**] .
   b. Baked-Enamel or Powder-Coated Finish: As selected form Full Range .

2.3 FABRICATION

A. Form postal specialties to required shapes and sizes, with true lines and angles, square, rigid, and without warp, and with metal faces flat and free of dents or distortion. Make exposed metal edges and corners free of sharp edges and burrs and safe to touch. Fabricate doors of postal specialties to preclude binding, warping, or misalignment.

B. Preassemble postal specialties in shop to greatest extent possible to minimize field assembly.

C. Where dissimilar metals contact each other, protect against galvanic action by painting contact surfaces with bituminous coating or by applying other permanent separation as recommended by manufacturers of dissimilar metals.

PART 3 - EXECUTION

3.1 INSTALLATION

A. Mail Receptacles: Install mail receptacles with center of tenant-door lock cylinders and bottom of compartments at the maximum and minimum heights above finished floor established by the USPS and manufacturer's written instructions. Maximum height is 48" to center of tenant door lock cylinder. Minimum height is 15" to the bottom of the mail receptacle.

B. Pedestal-Mounted Postal Specialties: Anchor units with 1/2-inch- diameter, stainless-steel anchor bolts with hooked ends.

C. Collection Boxes: Install collection boxes with [**centerline of mail slots**] not more than 48 inches above finished floor.

3.2 FIELD QUALITY CONTROL

A. Arrange for USPS personnel to examine and test postal specialties served by the USPS after they have been installed according to USPS regulations.

END OF SECTION 10 5500.13

SECTION 10 5623 - WIRE STORAGE SHELVING

PART 1 - GENERAL

1.1 SECTION INCLUDES

A. Wall mounted wire closet shelving

B. Accessories

1.2 RELATED REQUIREMENTS

A. Section 06 1000 - Rough Carpentry: Blocking in walls for attachment of shelving.

B. Section 09 2116 - Gypsum Board Assemblies: Blocking in metal stud walls for attachment of standards.

1.3 REFERENCE STANDARDS

A. NEMA LD 3 - High-Pressure Decorative Laminates; 2005.

1.4 SUBMITTALS

A. Product Data: Manufacturer's data sheets on each product to be used, with installation instructions.

B. Shop Drawings: Provide drawings prepared specifically for this project; show dimensions of shelving and attachment to substrates.

1.5 QUALITY ASSURANCE

A. Manufacturer Qualifications: Company specializing in manufacturing the products specified in this Section with minimum three years documented experience.

1.6 DELIVERY, STORAGE AND HANDLING

A. Store products in manufacturer's unopened packaging until ready for installation.

B. Store products under cover and elevated above grade.

C. Store flat to prevent warpage and bending.

PART 2 - PRODUCTS

2.1 MANUFACTURERS

A. Basis-of-Design Product: Subject to compliance with requirements, provide product indicated on Drawings or comparable product by one of the following

1. American Wire Inc.
2. California Wire Products Corporation.
3. Folding Guard Corporation.
4. Jesco Industries, Inc.
5. Kenco Wire & Iron Products Inc.
6. King Wire Partitions, Inc.
7. Newark Wire Works Inc.
8. SpaceGuard Products.
9. Standard Wire & Steel Works.

2.2 SHELVING APPLICATIONS

A. Shelf Depth: 12 inches (305 mm), unless otherwise indicated.

2.3 MATERIALS

A. Wire Shelving: Factory-assembled coated wire mesh shelf assemblies for wall-mounting, with all components and connections required to produce a rigid structure that is free of buckling and warping.

1. Construction: Cold-drawn steel wire with average tensile strength of 100,000 psi (690 MPa) resistance welded into uniform mesh units, square, rigid, flat, and free of dents or other distortions, with wires trimmed smooth.
2. Coating: PVC or epoxy, applied after fabrication, covering all surfaces.
3. PVC Coating: 9 to 11 mils (0.23 to 0.028 mm) thick.
4. Epoxy Coating: Non-toxic epoxy-polyester powder coating baked-on finish, 3 to 5 mils (0.76 to 1.27 mm) thick.
5. Standard Mesh Shelves: Cross deck wires spaced at 1 inch (25.4 mm).

B. Mounting Hardware: Provide manufacturer's standard mounting hardware; include support braces, wall brackets, back clips, end clips, poles, and other accessories as required for complete and secure installation; factory finished to match shelving.

C. Fasteners: As recommended by manufacturer for mounting substrates.

PART 3 - EXECUTION

3.1 EXAMINATION

A. Inspect areas to receive shelving, to verify that spaces are properly prepared to receive shelf units, and are of dimensions indicated on shop drawings.

B. Verify appropriate fastening hardware.

C. Do not begin installation until substrates have been properly prepared.

D. If substrate preparation is the responsibility of another installer, notify Architect of unsatisfactory preparation before proceeding.

3.2 PREPARATION

A. Clean surfaces thoroughly prior to installation.

B. Prepare surfaces using the methods recommended by the manufacturer for achieving the best result for the substrate under the project conditions.

3.3 INSTALLATION

A. Install in accordance with manufacturer's instructions, with shelf surfaces level.

B. Cap exposed ends of cut wires.

C. Install back clips, end clips at side walls, and support braces at open ends. Install intermediate support braces as recommended by manufacturer.

3.4 CLEANING

A. Clean soiled surfaces after installation.

3.5 PROTECTION

A. Protect installed work from damage.

B. Touch-up, repair, or replace damaged products before Substantial Completion in a manner that eliminates evidence of replacement

END OF SECTION 10 5623

SECTION 11 3100 - RESIDENTIAL APPLIANCES

PART 1 - GENERAL

1.1 RELATED DOCUMENTS

A. Drawings and general provisions of the Contract, including General and Supplementary Conditions and Division 1 Specification Sections, apply to this Section.

1.2 WORK INCLUDED

A. Refrigerator/freezers.

B. Ranges.

C. Range Hoods.

D. Dishwashers.

E. In sink food disposals.

F. Clothes Washing Machines.

G. Clothes Dryers.

1.3 SUBMITTALS

A. Product Data: Catalog cuts of each appliance, show pertinent data and information.

1.4 DELIVERY AND STORAGE

A. Each appliance shall be delivered complete in undamaged cartons, clearly labeled indicating type of appliance. Store in a secure location, protect from damage and environmental elements until installed.

PART 2 - PRODUCTS

2.1 MANUFACTURER

A. Provided appliances manufactured by the following:

1. GE
2. Whirlpool
3. Frigidair

4. KitchenAid

2.2 MATERIALS

A. Provide appliances constructed in accordance with manufacturer's standard designs and in accordance with national safety standards for the products indicated.

B. Colors: Manufacturers standard stainless-steel finish. For laundry equipment use manufacturers standard white finish.

2.3 PRODUCTS

A. Note: Product models and model information in this specification only apply to unit appliance. Refer to Interior Design Package for appliances in amenity spaces. Appliances selected by the Owner for Apartment Units are as follows:

1. Refrigerator/freezers:
   a. Apartment Units - See schedule located on A1.0c
   b. Type A- Apartment Units – See schedule located on A1.0c
2. Electric Ranges:
   a. Apartment Units: See schedule located on A1.0c
   b. Type A - Apartment Units: See schedule located on A1.0c
3. Range Hoods:
   a. Apartment Units: N/A
   b. Type A - Apartment Units: See schedule located on A1.0c
4. Microwaves:
   a. Apartment Units: See schedule located on A1.0c
   b. Type A - Apartment Units: See schedule located on A1.0c
5. Dishwashers.
   a. Apartment Units: See schedule located on A1.0c
   b. Type A - Apartment Units: See schedule located on A1.0c
6. In sink food disposals:
   a. All Apartment Units: See schedule located on A1.0c
7. Clothes Washing Machines with Clothes Dryers:
   a. Apartment Units: See schedule located on A1.0c
   b. Type A Side by Side - Apartment Units: See schedule located on A1.0c

B. Note: Owner and GC to coordinate final appliance selections based on Earthcraft requirements.

PART 3 - EXECUTION

3.1 INSTALLATION

A. Install appliances and accessories in compliance with manufacturer's recommendations and specifications. Anchor ranges and dishwashers so that they will not tip over when a 250 pound weight is placed on the appliance door in an open position.

B. Install appliances, including hard-wired and plug-in electrical connections.

C. Install appliances, including plumbing connections.

D. Install appliances, including exhaust ventilation connections.

E. After installation and mechanical and electrical connections have been completed, operate appliances through repeated cycles to assure correct operation.

END OF SECTION 11 3100

SECTION 12 2113 - HORIZONTAL LOUVER BLINDS

PART 1 - GENERAL

1.1 SUMMARY

A. Section Includes:

1. Horizontal louver blinds with faux wood.

1.2 ACTION SUBMITTALS

A. Product Data: For each type of product.

B. Shop Drawings: For horizontal louver blinds, include fabrication and installation details.

C. Samples: For each exposed product and for each color and texture specified.

1.3 INFORMATIONAL SUBMITTALS

A. Product certificates.

B. Product test reports.

1.4 CLOSEOUT SUBMITTALS

A. Maintenance data.

1.5 QUALITY ASSURANCE

A. Mockups: Build mockups to verify selections made under Sample submittals and to demonstrate aesthetic effects and set quality standards for fabrication and installation.

1. Approval of mockups does not constitute approval of deviations from the Contract Documents contained in mockups unless Architect specifically approves such deviations in writing.
2. Subject to compliance with requirements, approved mockups may become part of the completed Work if undisturbed at time of Substantial Completion.

PART 2 - PRODUCTS

2.1 HORIZONTAL LOUVER BLINDS

A. Width: 2 inches faux wood.

B. Headrail:

1. Manual Lift Mechanism:
   a. Lift-Cord Lock: Variable; stops lift cord at user-selected position within blind full operating range
   b. Operator: Extension of lift cord(s) through lift-cord lock mechanism to form cord pull.
2. Manual Tilt Mechanism: Enclosed worm-gear mechanism and linkage rod that adjusts ladders.
   a. Tilt: Full.
   b. Tilt: Two-direction, positive stop or lockout limited at an angle of 80 degrees from horizontal , both directions].
   c. Operator: Corrosion-resistant steel rod
3. Manual Lift-Operator and Tilt-Operator Lengths: Manufacturer's standard
4. Manual Lift-Operator and Tilt-Operator Locations: Manufacturer's standard

C. Bottom Rail: Matching slats.

D. Type: Manufacturer's standard

E. Ladders: Braided cord

F. Valance: Manufacturer's standard

G. Mounting Brackets: With spacers and shims required for blind placement and alignment indicated.

1. Type: Wall
2. Intermediate Support: Provide intermediate support brackets to produce support spacing recommended by blind manufacturer for weight and size of blind.

H. Hold-Down Brackets and Hooks or Pins: Manufacturer's standard.

I. Side Channels and Perimeter Light Gap Seals: Manufacturer's standard.

J. Colors, Textures, Patterns, and Gloss:

1. Slats: [Match Architect's samples] [Match Architect's samples for custom color and other characteristics] [As selected by Architect from manufacturer's full range] [As indicated on Drawings] <Insert description>.
2. Components: [Provide rails, cords, ladders, and materials exposed to view matching or coordinating with slat color unless otherwise indicated] <Insert description>.

2.2 HORIZONTAL LOUVER BLIND FABRICATION

A. Product Safety Standard: Fabricate horizontal louver blinds to comply with WCMA A 100.1 including requirements for corded, flexible, looped devices; lead content of components; and warning labels.

B. Unit Sizes: Fabricate units in sizes to fill window and other openings as follows, measured at 74 deg F :

1. Between (Inside) Jamb Installation: Width equal to jamb-to-jamb dimension of opening in which blind is installed less 1/4 inch per side or 1/2 inch total, plus or minus 1/8 inch . Length equal to head-to-sill dimension of opening in which blind is installed less 1/4 inch , plus or minus 1/8 inch .
2. Outside of Jamb Installation: Width and length as indicated, with terminations between blinds of end-to-end installations at centerlines of mullion or other defined vertical separations between openings.

PART 3 - EXECUTION

3.1 INSTALLATION

A. Examine substrates, areas, and conditions, with Installer present, for compliance with requirements for installation tolerances, operational clearances, and other conditions affecting performance.

1. Proceed with installation only after unsatisfactory conditions have been corrected.

B. Install horizontal louver blinds level and plumb, aligned and centered on openings, and aligned with adjacent units according to manufacturer's written instructions.

1. Locate so exterior slat edges are not closer than [**1 inch**] from interior faces of glass and not closer than [**1/2 inch**] from interior faces of glazing frames through full operating ranges of blinds.
2. Install mounting and intermediate brackets to prevent deflection of headrails.
3. Install with clearances that prevent interference with adjacent blinds, adjacent construction, and operating hardware of glazed openings, other window treatments, and similar building components and furnishings.

C. Adjust horizontal louver blinds to operate free of binding or malfunction through full operating ranges.

D. Clean horizontal louver blind surfaces after installation according to manufacturer's written instructions.

END OF SECTION 12 2113

SECTION 12 3530 - RESIDENTIAL CASEWORK

PART 1 - GENERAL

1.1 RELATED DOCUMENTS

A. Drawings and general provisions of the Contract, including General and Supplementary Conditions and Division 1 Specification Sections, apply to this Section.

1.2 SUMMARY

A. Section Includes:

1. Kitchen cabinets. VHDA Type 2 Cabinet Construction.
2. Bathroom vanities. VHDA Type 2 Cabinet Construction.
3. High-plastic laminate countertops and backsplashes

1.3 ACTION SUBMITTALS

A. Shop Drawings: For residential casework. Include plans, elevations, details, and attachments to other work.

B. Manufacturer's Sample Box: Include all standard cabinet and countertop finish sample chips for Owner's review and selection.

C. Sample Cabinets: Submit one completely fabricated and finished kitchen cabinet with drawer assembly , countertop, vanity, vanity top, to the project site for inspection prior to the fabrication of any units for this project. Approved samples shall become the standard of materials and workmanship of this section and may be incorporated into the project. VHDA to review sample to ensure is meet the VHDA Minimum Design and Construction Requirements.

D. GC to submit the VHDA Cabinet Form for VHDA to review.

1.4 QUALITY ASSURANCE

A. Regulatory Requirements:

1. BHMA A156.9 - American National Standard for Cabinet Hardware; Builders HardwareManufacturers Association; 2010 (ANSI/BHMA A156.9).
2. ANSI/KCMA A161.1 - Performance and Construction Standard for Kitchen and Vanity Cabinets; Kitchen Cabinet Manufacturers Association; 2000 (R2006).
3. KCMA (DIR) - Directory of Certified Cabinet Manufacturers; Kitchen Cabinet Manufacturers Association; current edition, online.BHMA A156.9 - American National Standard for Cabinet Hardware; Builders HardwareManufacturers Association; 2010 (ANSI/BHMA A156.9).

4. ANSI/KCMA A161.1 - Performance and Construction Standard for Kitchen and Vanity Cabinets; Kitchen Cabinet Manufacturers Association; 2000 (R2006).
5. KCMA (DIR) - Directory of Certified Cabinet Manufacturers; Kitchen Cabinet Manufacturers Association; current edition, online.

PART 2 - PRODUCTS

2.1 MANUFACTURER

A. Advanta Cabinets

2.2 MATERIALS

A. All to be Owner approved. All cabinet boxes will have backs and toe kicks, with finished panels where the cabinets ends and backs are exposed or where cabinets are to be removed to meet ADA requirements in the Handicap Adaptable units.

B. Provide Cabinet and Countertop manufacturer's standard cabinets and tops constructed with materials that meet the following criteria:

1. Adhesives: Do not use adhesives that contain urea formaldehyde.
2. Hardwood Lumber: Kiln dried to 7 percent moisture content.
3. Softwood Lumber: Kiln dried to 10 percent moisture content.
4. Hardwood Plywood: HPVA HP-1, made without urea formaldehyde.
5. Particleboard: ANSI A208.1, Grade M-2, made without urea formaldehyde.
6. Medium-Density Fiberboard: ANSI A208.2, Grade MD, made without urea formaldehyde.
7. Hardboard: AHA A135.4, Class 1 Tempered.
8. VHDA Type 2

C. Plastic Laminate: Particleboard faced with high-pressure decorative laminate complying with NEMA LD 3, Grade VGS.

1. Colors, Textures, and Patterns: As selected by Owner from Cabinet and Countertop manufacturer's full range.

2.3 CABINET HARDWARE

A. General: Manufacturer's standard units complying with ANSI/KCMA A161.1, BHMA A156.9, of type, size, style, material, and finish as selected by Owner from Cabinet full range.

B. Pulls: Manufacturer's standard units as selected by Owner from Cabinet manufacturer's full range.

C. Hinges: Manufacturer's standard units Semiconcealed (wraparound) butt hinges for overlay doors or Concealed European-style self-closing hinges as selected by Owner.

D. Drawer Guides: Manufacturer's standard units; epoxy-coated-metal, self-closing drawer guides; designed to prevent rebound when drawers are closed; with nylon-tired, ball-bearing rollers; and complying with BHMA A156.9, Type B05011 or B05091.

2.4 COUNTERTOP MATERIALS

A. Plastic Laminate: High-pressure decorative laminate complying with ANSI/NEMA LD 3.

1. Grade: HGL.
2. Colors, Textures, and Patterns: as selected by Owner from Countertop manufacturer's full range.

B. Available Manufacturers: Subject to compliance with requirements, manufacturers offering products that may be incorporated into the Work include, but are not limited to, the following:

1. Formica Corp.
2. Nevamar Company, LLC
3. Wilsonart International.

C. Particleboard: ANSI A208.1, Grade M-2-Exterior Glue.

D. Plywood: Exterior softwood plywood complying with DOC PS 1, Grade C-C Plugged, touch sanded.

E. Configuration: Provide countertops with the following front, cove (intersection of top with backsplash), backsplash, and endsplash style:

1. Front: Manufacturer's standard Rolled or Self-edge, as selected by Owner.
2. Cove: Manufacturer's standard Cove molding (one-piece postformed laminate supported at junction of top and backsplash by wood cove molding) or Applied (backsplash rests on top forming seam at inside corner), as selected by Owner.
3. Backsplash: Manufacturer's standard Curved or waterfall shape Square edge, as selected by Owner.
4. Endsplash: Manufacturer's standard Square edge or none, as selected by Owner.

PART 3 - EXECUTION

3.1 INSTALLATION

A. Install cabinets plumb, true to line and level, with all counters horizontal and level. Anchor cabinets to walls securely. Scribe and cut in at ends of runs and at partitions accurately and with a neat appearance. All hardware shall be adjusted and left in perfect working order. Finished surfaces shall be clean and left free of any imperfections or marks.

B. All wall cabinets shall be attached to walls with screws of adequate size and length to support loading. 12 inches from the ceiling.

C. All cabinet moldings and trim shall match cabinets in color and finish. All touch-up work required shall match original color and finish.

D. Provide caulking between countertops and all adjacent vertical surfaces. Use color to match top and splash. Fill all exposed nail holes, match color and finish of adjacent surfaces.

E. Trim shall be required where cabinets abut walls, ceilings, etc., and shall be finished to match cabinets. All trim shall be firmly attached and shall have no exposed nail holes.

END OF SECTION 12 3530

SECTION 12 3640 - STONE COUNTERTOPS

PART 1 - GENERAL

1.1 SUMMARY

A. Section includes stone countertops.

1.2 RELATED REQUIREMENTS

A. ASTM E84 - Standard Test Method for Surface Burning Characteristics of Building Materials; 2010b.

B. AWI/AWMAC/WI (AWS) - Architectural Woodwork Standards; 2009.

C. MIA (DSDM) - Dimensional Stone Design Manual; VII, 2007.

1.3 SUBMITTALS

A. Product Data: Manufacturer's data sheets on each product to be used, including:

1. Preparation instructions and recommendations.
2. Storage and handling requirements and recommendations.
3. Specimen warranty.

B. Shop Drawings: Complete details of materials and installation ; combine with shop drawings of cabinets and casework specified in other sections.

C. Selection Samples: For each finish product specified, color chips representing manufacturer's full range of available colors and patterns.

D. Installation Instructions: Manufacturer's installation instructions and recommendations.

E. Maintenance Data: Manufacturer's instructions and recommendations for maintenance and repair of countertop surfaces.

1.4 QUALITY ASSURANCE

A. Installer Qualifications: Fabricator of stone countertops.

1.5 DELIVERY, STORAGE, AND HANDLING

A. Store products in manufacturer's unopened packaging until ready for installation.

B. Store and dispose of solvent-based materials, and materials used with solvent-based materials, in accordance with requirements of local authorities having jurisdiction.

1.6 FIELD CONDITIONS

A. Maintain environmental conditions (temperature, humidity, and ventilation) within limits recommended by manufacturer for optimum results. Do not install products under environmental conditions outside manufacturer's absolute limits.

PART 2 - PRODUCTS

2.1 COUNTERTOPS ASSEMBLIES

A. Quality Standard: Premium Grade, in accordance with AWI/AWMAC/WI Architectural Woodwork Standards.

B. Natural Stone Countertops: Stone slabs bonded to substrate; use as large pieces as possible with inconspicuous adhesive joints.

1. Stone: Granite without cracks, voids, or pin holes ; filling with matching epoxy resin is acceptable.
2. Color: Uniform light gray.
3. Stone Thickness: 1-1/4 inch (3 cm), minimum.
4. Surface Finish: Honed, non-glare.
5. Exposed Edge Treatment: Stone bullnose, 1 inch (25 mm) radius.
6. Back and End Splashes: Same material, same thickness; for field attachment.

2.2 ACCESSORIES MATERIALS

A. Adhesives: Chemical resistant waterproof adhesive as recommended by manufacturer of materials being joined.

B. Joint Sealant: Mildew-resistant silicone sealant, white.

2.3 STONE FABRICATION, GENERAL

A. Provide back/end splash wherever counter edge abuts vertical surface unless otherwise indicated.

1. Height: 4 inches (102 mm), unless otherwise indicated.

B. Secure to countertop with concealed fasteners and with contact surfaces set in waterproof glue.

PART 3 - EXECUTION

3.1 EXAMINATION

A. Do not begin installation until substrates have been properly prepared.

B. If substrate preparation is the responsibility of another installer, notify Architect of unsatisfactory preparation before proceeding.

C. Verify that wall surfaces have been finished and mechanical and electrical services and outlets are installed in proper locations.

3.2 PREPARATION

A. Clean surfaces thoroughly prior to installation.

B. Prepare surfaces using the methods recommended by the manufacturer for achieving the best result for the substrate under the project conditions.

3.3 INSTALLATION OF COUNTERTOPS

A. Securely attach countertops to cabinets using concealed fasteners. Make flat surfaces level; shim where required.

B. Seal joint between back/end splashes and vertical surfaces.

3.4 TOLERANCES

A. Variation From Horizontal: 1/8 inch in 10 feet (3 mm in 3 m), maximum.

B. Offset From Wall, Countertops: 1/8 inch (3 mm) maximum; 1/16 inch (1.5 mm) minimum.

C. Field Joints: 1/8 inch (3 mm) wide, maximum.

3.5 CLEANING

A. Clean countertops surfaces thoroughly.

3.6 PROTECTION

A. Protect installed products until completion of project.

B. Touch-up, repair or replace damaged products before Substantial Completion.

END OF SECTION 12 3640

SECTION 210500 - COMMON WORK RESULTS FOR FIRE SUPPRESSION

PART 1 - GENERAL

1.1 SUMMARY

A. This Section includes the following:

1. Piping materials and installation instructions common to most piping systems.
2. Mechanical sleeve seals.
3. Sleeves.
4. Escutcheons.
5. Grout.
6. Fire-suppression demolition.
7. Concrete bases.
8. Supports and anchorages.

1.2 DEFINITIONS

A. Finished Spaces: Spaces other than mechanical and electrical equipment rooms, furred spaces, pipe chases, unheated spaces immediately below roof, spaces above ceilings, unexcavated spaces, crawlspaces, and tunnels.

B. Exposed, Interior Installations: Exposed to view indoors. Examples include finished occupied spaces and mechanical equipment rooms.

C. Exposed, Exterior Installations: Exposed to view outdoors or subject to outdoor ambient temperatures and weather conditions. Examples include rooftop locations.

D. Concealed, Interior Installations: Concealed from view and protected from physical contact by building occupants. Examples include above ceilings and in chases.

E. Concealed, Exterior Installations: Concealed from view and protected from weather conditions and physical contact by building occupants but subject to outdoor ambient temperatures. Examples include installations within unheated shelters.

1.3 SUBMITTALS

A. Mechanical sleeve seals.

1.4 QUALITY ASSURANCE

A. Steel Support Welding: Qualify processes and operators according to AWS D1.1, "Structural Welding Code--Steel."

B. Steel Pipe Welding: Qualify processes and operators according to ASME Boiler and Pressure Vessel Code: Section IX, "Welding and Brazing Qualifications."

1. Comply with provisions in ASME B31 Series, "Code for Pressure Piping."
2. Certify that each welder has passed AWS qualification tests for welding processes involved and that certification is current.

C. Electrical Characteristics for Fire-Suppression Equipment: Equipment of higher electrical characteristics may be furnished provided such proposed equipment is approved in writing and connecting electrical services, circuit breakers, and conduit sizes are appropriately modified. If minimum energy ratings or efficiencies are specified, equipment shall comply with requirements.

PART 2 - PRODUCTS

2.1 PIPE, TUBE, AND FITTINGS

A. Refer to individual Division 21 piping Sections for pipe, tube, and fitting materials and joining methods.

B. Pipe Threads: ASME B1.20.1 for factory-threaded pipe and pipe fittings.

2.2 JOINING MATERIALS

A. Refer to individual Division 21 piping Sections for special joining materials not listed below.

B. Pipe-Flange Gasket Materials: ASME B16.21, nonmetallic, flat, asbestos-free, 1/8-inch (3.2-mm) maximum thickness unless thickness or specific material is indicated.

C. Plastic, Pipe-Flange Gasket, Bolts, and Nuts: Type and material recommended by piping system manufacturer, unless otherwise indicated.

D. Solder Filler Metals: ASTM B 32, lead-free alloys. Include water-flushable flux according to ASTM B 813.

E. Brazing Filler Metals: AWS A5.8, BCuP Series or BAg1, unless otherwise indicated.

F. Welding Filler Metals: Comply with AWS D10.12.

G. Solvent Cements for Joining CPVC Plastic Piping: ASTM F 493.

2.3 MECHANICAL SLEEVE SEALS

A. Description: Modular sealing element unit, designed for field assembly, to fill annular space between pipe and sleeve.

B. Sealing Elements: EPDM or NBR interlocking links shaped to fit surface of pipe. Include type and number required for pipe material and size of pipe.

C. Pressure Plates: Stainless steel. Include two for each sealing element.

D. Connecting Bolts and Nuts: Stainless steel of length required to secure pressure plates to sealing elements. Include one for each sealing element.

2.4 SLEEVES

A. Galvanized-Steel Sheet: 0.0239-inch (0.6-mm) minimum thickness; round tube closed with welded longitudinal joint.

B. Steel Pipe: ASTM A 53, Type E, Grade B, Schedule 40, galvanized, plain ends.

C. Cast Iron: Cast or fabricated "wall pipe" equivalent to ductile-iron pressure pipe, with plain ends and integral waterstop, unless otherwise indicated.

D. Stack Sleeve Fittings: Manufactured, cast-iron sleeve with integral clamping flange. Include clamping ring and bolts and nuts for membrane flashing.

1. Underdeck Clamp: Clamping ring with set screws.

E. Molded PVC: Permanent, with nailing flange for attaching to wooden forms.

F. PVC Pipe: ASTM D 1785, Schedule 40.

G. Molded PE: Reusable, PE, tapered-cup shaped, and smooth-outer surface with nailing flange for attaching to wooden forms.

2.5 ESCUTCHEONS

A. Description: Manufactured wall and ceiling escutcheons and floor plates, with an ID to closely fit around pipe, tube, and insulation of insulated piping and an OD that completely covers opening.

B. One-Piece, Deep-Pattern Type: Deep-drawn, box-shaped brass with polished chrome-plated finish.

C. One-Piece, Cast-Brass Type: With set screw.

1. Finish: Polished chrome-plated and rough brass.

D. Split-Casting, Cast-Brass Type: With concealed hinge and set screw.

1. Finish: Polished chrome-plated and rough brass.

2.6 GROUT

A. Description: ASTM C 1107, Grade B, nonshrink and nonmetallic, dry hydraulic-cement grout.

1. Characteristics: Post-hardening, volume-adjusting, nonstaining, noncorrosive, nongaseous, and recommended for interior and exterior applications.
2. Design Mix: 5000-psi (34.5-MPa), 28-day compressive strength.
3. Packaging: Premixed and factory packaged.

PART 3 - EXECUTION

3.1 FIRE-SUPPRESSION DEMOLITION

A. Refer to Division 01 Section "Cutting and Patching" and Division 02 Section "Selective Structure Demolition" for general demolition requirements and procedures.

B. Disconnect, demolish, and remove fire-suppression systems, equipment, and components indicated to be removed.

1. Piping to Be Removed: Remove portion of piping indicated to be removed and cap or plug remaining piping with same or compatible piping material.
2. Piping to Be Abandoned in Place: Drain piping and cap or plug piping with same or compatible piping material.
3. Equipment to Be Removed: Disconnect and cap services and remove equipment.
4. Equipment to Be Removed and Reinstalled: Disconnect and cap services and remove, clean, and store equipment; when appropriate, reinstall, reconnect, and make equipment operational.
5. Equipment to Be Removed and Salvaged: Disconnect and cap services and remove equipment and deliver to Owner.

C. If pipe, insulation, or equipment to remain is damaged in appearance or is unserviceable, remove damaged or unserviceable portions and replace with new products of equal capacity and quality.

3.2 PIPING SYSTEMS - COMMON REQUIREMENTS

A. Install piping according to the following requirements and Division 21 Sections specifying piping systems.

B. Drawing plans, schematics, and diagrams indicate general location and arrangement of piping systems. Indicated locations and arrangements were used to size pipe and calculate friction loss, expansion, pump sizing, and other design considerations. Install piping as indicated unless deviations to layout are approved on Coordination Drawings.

C. Install piping in concealed locations, unless otherwise indicated and except in equipment rooms and service areas.

D. Install piping indicated to be exposed and piping in equipment rooms and service areas at right angles or parallel to building walls. Diagonal runs are prohibited unless specifically indicated otherwise.

E. Install piping above accessible ceilings to allow sufficient space for ceiling panel removal.

F. Install piping to permit valve servicing.

G. Install piping at indicated slopes.

H. Install piping free of sags and bends.

I. Install fittings for changes in direction and branch connections.

J. Install piping to allow application of insulation.

K. Select system components with pressure rating equal to or greater than system operating pressure.

L. Install escutcheons for penetrations of walls, ceilings, and floors.

M. Install sleeves for pipes passing through concrete and masonry walls, gypsum-board partitions, and concrete floor and roof slabs.

N. Verify final equipment locations for roughing-in.

O. Refer to equipment specifications in other Sections of these Specifications for roughing-in requirements.

3.3 PIPING JOINT CONSTRUCTION

A. Join pipe and fittings according to the following requirements and Division 21 Sections specifying piping systems.

B. Ream ends of pipes and tubes and remove burrs. Bevel plain ends of steel pipe.

C. Remove scale, slag, dirt, and debris from inside and outside of pipe and fittings before assembly.

D. Soldered Joints: Apply ASTM B 813, water-flushable flux, unless otherwise indicated, to tube end. Construct joints according to ASTM B 828 or CDA's "Copper Tube Handbook," using lead-free solder alloy complying with ASTM B 32.

E. Brazed Joints: Construct joints according to AWS's "Brazing Handbook," "Pipe and Tube" Chapter, using copper-phosphorus brazing filler metal complying with AWS A5.8.

F. Threaded Joints: Thread pipe with tapered pipe threads according to ASME B1.20.1. Cut threads full and clean using sharp dies. Ream threaded pipe ends to remove burrs and restore full ID. Join pipe fittings and valves as follows:

1. Apply appropriate tape or thread compound to external pipe threads unless dry seal threading is specified.
2. Damaged Threads: Do not use pipe or pipe fittings with threads that are corroded or damaged. Do not use pipe sections that have cracked or open welds.

G. Welded Joints: Construct joints according to AWS D10.12, using qualified processes and welding operators according to Part 1 "Quality Assurance" Article.

H. Flanged Joints: Select appropriate gasket material, size, type, and thickness for service application. Install gasket concentrically positioned. Use suitable lubricants on bolt threads.

I. Plastic Piping Solvent-Cement Joints: Clean and dry joining surfaces. Join pipe and fittings according to the following:

1. Comply with ASTM F 402, for safe-handling practice of cleaners, primers, and solvent cements.
2. CPVC Piping: Join according to ASTM D 2846/D 2846M Appendix.

J. Plastic Pressure Piping Gasketed Joints: Join according to ASTM D 3139.

3.4 EQUIPMENT INSTALLATION - COMMON REQUIREMENTS

A. Install equipment to allow maximum possible headroom unless specific mounting heights are not indicated.

B. Install equipment level and plumb, parallel and perpendicular to other building systems and components in exposed interior spaces, unless otherwise indicated.

C. Install equipment to facilitate service, maintenance, and repair or replacement of components. Connect equipment for ease of disconnecting, with minimum interference to other installations. Extend grease fittings to accessible locations.

D. Install equipment to allow right of way for piping installed at required slope.

3.5 CONCRETE BASES

A. Concrete Bases: Anchor equipment to concrete base according to equipment manufacturer's written instructions and according to seismic codes at Project.

1. Construct concrete bases of dimensions indicated, but not less than 4 inches (100 mm) larger in both directions than supported unit.
2. Install dowel rods to connect concrete base to concrete floor. Unless otherwise indicated, install dowel rods on 18-inch (450-mm) centers around the full perimeter of the base.
3. Install epoxy-coated anchor bolts for supported equipment that extend through concrete base, and anchor into structural concrete floor.
4. Place and secure anchorage devices. Use supported equipment manufacturer's setting drawings, templates, diagrams, instructions, and directions furnished with items to be embedded.
5. Install anchor bolts to elevations required for proper attachment to supported equipment.
6. Install anchor bolts according to anchor-bolt manufacturer's written instructions.
7. Use 3000-psi (20.7-MPa), 28-day compressive-strength concrete and reinforcement as specified in other divisions.

3.6 ERECTION OF METAL SUPPORTS AND ANCHORAGES

A. Refer to Division 05 Section "Metal Fabrications" for structural steel.

B. Cut, fit, and place miscellaneous metal supports accurately in location, alignment, and elevation to support and anchor fire-suppression materials and equipment.

C. Field Welding: Comply with AWS D1.1.

3.7 ERECTION OF WOOD SUPPORTS AND ANCHORAGES

A. Cut, fit, and place wood grounds, nailers, blocking, and anchorages to support, and anchor fire-suppression materials and equipment.

B. Select fastener sizes that will not penetrate members if opposite side will be exposed to view or will receive finish materials. Tighten connections between members. Install fasteners without splitting wood members.

C. Attach to substrates as required to support applied loads.

3.8 SLEEVE INSTALLATION

A. General Requirements: Install sleeves for pipes and tubes passing through penetrations in floors, partitions, roofs, and walls.

B. Sleeves are not required for core-drilled holes.

C. Permanent sleeves are not required for holes formed by removable PE sleeves.

D. Cut sleeves to length for mounting flush with both surfaces unless otherwise indicated.

E. Install sleeves in new partitions, slabs, and walls as they are built.

F. For interior wall penetrations, seal annular space between sleeve and pipe or pipe insulation using joint sealants appropriate for size, depth, and location of joint. Comply with requirements in Division 07 Section "Joint Sealants" for joint sealants.

G. Aboveground, Exterior-Wall Pipe Penetrations: Seal penetrations using sleeves and mechanical sleeve seals. Select sleeve size to allow for 1-inch (25-mm) annular clear space between pipe and sleeve for installing mechanical sleeve seals.

1. Install steel pipe for sleeves smaller than 6 inches (150 mm) in diameter.
2. Install cast-iron "wall pipes" for sleeves 6 inches (150 mm) and larger in diameter.
3. Mechanical Sleeve Seal Installation: Select type and number of sealing elements required for pipe material and size. Position pipe in center of sleeve. Assemble mechanical sleeve seals and install in annular space between pipe and sleeve. Tighten bolts against pressure plates that cause sealing elements to expand and make watertight seal.

H. Underground, Exterior-Wall Pipe Penetrations: Install cast-iron "wall pipes" for sleeves. Seal pipe penetrations using mechanical sleeve seals. Select sleeve size to allow for 1-inch (25-mm) annular clear space between pipe and sleeve for installing mechanical sleeve seals.

1. Mechanical Sleeve Seal Installation: Select type and number of sealing elements required for pipe material and size. Position pipe in center of sleeve. Assemble mechanical sleeve seals and install in annular space between pipe and sleeve. Tighten bolts against pressure plates that cause sealing elements to expand and make watertight seal.

I. Seal space outside of sleeves in concrete slabs and walls with grout.

J. Install sleeves that are large enough to provide 1/4-inch (6.4-mm) annular clear space between sleeve and pipe or pipe insulation unless otherwise indicated.

K. Install sleeve materials according to the following applications:

1. Sleeves for Piping Passing through Concrete Floor Slabs: Steel pipe.
2. Sleeves for Piping Passing through Concrete Floor Slabs of Mechanical Equipment Areas or Other Wet Areas: Steel pipe or Stack sleeve fittings.

    a. Extend sleeves 2 inches (50 mm) above finished floor level.
    b. For pipes penetrating floors with membrane waterproofing, extend cast-iron sleeve fittings below floor slab as required to secure clamping ring if ring is specified. Secure flashing between clamping flanges. Install section of cast-iron soil pipe to extend sleeve to 2 inches (50 mm) above finished floor level. Comply with requirements in "Sheet Metal Flashing and Trim" specifications listed in other divisions for flashing.

3. Sleeves for Piping Passing through Gypsum-Board Partitions:

    a. PVC pipe or steel pipe sleeves for pipes smaller than NPS 6 (DN 150).
    b. Galvanized-steel sheet sleeves for pipes NPS 6 (DN 150) and larger.
    c. Exception: Sleeves are not required for water supply tubes and waste pipes for individual plumbing fixtures if escutcheons will cover openings.

4. Sleeves for Piping Passing through Concrete Roof Slabs: Steel pipe.
5. Sleeves for Piping Passing through Exterior Concrete Walls:

    a. Steel pipe sleeves for pipes smaller than NPS 6 (DN 150).
    b. Cast-iron wall pipe sleeves for pipes NPS 6 (DN 150) and larger.
    c. Install sleeves that are large enough to provide 1-inch (25-mm) annular clear space between sleeve and pipe or pipe insulation when sleeve seals are used.

L. Fire-Barrier Penetrations: Maintain indicated fire rating of walls, partitions, ceilings, and floors at pipe penetrations. Seal pipe penetrations with firestop materials. Comply with requirements in Division 07 Section "Penetration Firestopping" for firestop materials and installations. Further requirements may be shown on details provided on drawings.

3.9 ESCUTCHEON INSTALLATION

A. Install escutcheons for penetrations of walls, ceilings, and floors.

B. Escutcheons for New Piping:

1. Piping with Fitting or Sleeve Protruding from Wall: One piece, deep pattern.
2. Bare Piping at Wall and Floor Penetrations in Finished Spaces: One piece, cast brass with polished chrome-plated finish.
3. Bare Piping at Ceiling Penetrations in Finished Spaces: One piece or split casting, cast brass with polished chrome-plated finish.
4. Bare Piping in Unfinished Service Spaces: One piece, cast brass with rough-brass finish.
5. Bare Piping in Equipment Rooms: One piece, cast brass.
6. Bare Piping at Floor Penetrations in Equipment Rooms: One-piece floor plate.

C. Escutcheons for Existing Piping:

1. Chrome-Plated Piping: Split casting, cast brass with chrome-plated finish.
2. Insulated Piping: Split plate, stamped steel with concealed or exposed-rivet hinge and spring clips.
3. Bare Piping at Wall and Floor Penetrations in Finished Spaces: Split casting, cast brass with chrome-plated finish.
4. Bare Piping at Ceiling Penetrations in Finished Spaces: Split casting, cast brass with chrome-plated finish.
5. Bare Piping in Unfinished Service Spaces: Split casting, cast brass with rough-brass finish.
6. Bare Piping in Equipment Rooms: Split casting, cast brass.
7. Bare Piping at Floor Penetrations in Equipment Rooms: Split-casting floor plate.

3.10 GROUTING

A. Mix and install grout for fire-suppression equipment base bearing surfaces, pump and other equipment base plates, and anchors.

B. Clean surfaces that will come into contact with grout.

C. Provide forms as required for placement of grout.

D. Avoid air entrapment during placement of grout.

E. Place grout, completely filling equipment bases.

F. Place grout on concrete bases and provide smooth bearing surface for equipment.

G. Place grout around anchors.

H. Cure placed grout.

END OF SECTION 210500

SECTION 211313 - WET-PIPE SPRINKLER SYSTEMS

PART 1 - GENERAL

1.1 SUMMARY

A. Section Includes:

1. Pipes, fittings, and specialties.
2. Fire-protection valves.
3. Fire-department connections.
4. Sprinklers.
5. Excess-pressure pumps.
6. Alarm devices.
7. Pressure gages.

1.2 SYSTEM DESCRIPTIONS

A. Wet-Pipe Sprinkler System: Automatic sprinklers are attached to piping containing water and that is connected to water supply through alarm valve. Water discharges immediately from sprinklers when they are opened. Sprinklers open when heat melts fusible link or destroys frangible device. Hose connections are included if indicated.

1.3 PERFORMANCE REQUIREMENTS

A. Standard-Pressure Piping System Component: Listed for 175-psig (1200-kPa) minimum working pressure.

B. Delegated Design: Design sprinkler system(s), including comprehensive engineering analysis by a qualified state licensed professional (engineer or contractor as required by the state in which the project is located), using performance requirements and design criteria indicated on drawings and in specifications.

C. Sprinkler system design shall be approved by authorities having jurisdiction.

1. Margin of Safety for Available Water Flow and Pressure: 20 percent, including losses through water-service piping, valves, and backflow preventers. If 20 percent safety factor cannot be achieved without the use of a fire pump, and no fire pump is included in the design, contact the architect and/or engineer for further instructions.
2. Sprinkler Occupancy Hazard Classifications: See schedule on drawings.
3. Minimum Density for Automatic-Sprinkler Piping Design: See schedule on drawings.
4. Maximum Protection Area per Sprinkler: Per UL listing.
5. Total Combined Hose-Stream Demand Requirement: According to NFPA 13 unless otherwise indicated.

D. Seismic Performance: Sprinkler piping shall withstand the effects of earthquake motions determined according to NFPA 13 and ASCE/SEI 7.

1.4 SUBMITTALS

A. Product Data: For each type of product indicated.

B. Shop Drawings: For wet-pipe sprinkler systems. Include plans, elevations, sections, details, and attachments to other work.

1. Wiring Diagrams: For power, signal, and control wiring.

C. Delegated-Design Submittal: For sprinkler systems indicated to comply with performance requirements and design criteria, including analysis data signed and sealed by the qualified professional engineer responsible for their preparation.

D. Approved Sprinkler Piping Drawings: Working plans, prepared according to NFPA 13, that have been approved by authorities having jurisdiction, including hydraulic calculations if applicable.

E. Welding certificates.

F. Field Test Reports and Certificates: Indicate and interpret test results for compliance with performance requirements and as described in NFPA 13. Include "Contractor's Material and Test Certificate for Aboveground Piping."

G. Field quality-control reports.

H. Operation and maintenance data.

1.5 QUALITY ASSURANCE

A. Installer Qualifications:

1. Installer's responsibilities include designing, fabricating, and installing sprinkler systems and providing professional engineering services needed to assume engineering responsibility. Base calculations on results of fire-hydrant flow test.

a. Engineering Responsibility: Preparation of working plans, calculations, and field test reports by a qualified professional engineer.

B. Welding Qualifications: Qualify procedures and operators according to ASME Boiler and Pressure Vessel Code.

C. Electrical Components, Devices, and Accessories: Listed and labeled as defined in NFPA 70, by a qualified testing agency, and marked for intended location and application.

D. NFPA Standards: Sprinkler system equipment, specialties, accessories, installation, and testing shall comply with the following:

1. NFPA 13, "Installation of Sprinkler Systems."
2. NFPA 13R, "Installation of Sprinkler Systems in Residential Occupancies up to and Including Four Stories in Height."
3. NFPA 24, "Installation of Private Fire Service Mains and Their Appurtenances."

PART 2 - PRODUCTS

2.1 PIPING MATERIALS

A. Comply with requirements in "Piping Schedule" Article for applications of pipe, tube, and fitting materials, and for joining methods for specific services, service locations, and pipe sizes.

2.2 STEEL PIPE AND FITTINGS

A. Standard Weight, Galvanized- and Black-Steel Pipe: ASTM A 53/A 53M, Type E, Grade B. Pipe ends may be factory or field formed to match joining method.

B. Schedule 30, Galvanized- and Black-Steel Pipe: ASTM A 135; ASTM A 795/A 795M, Type E; or ASME B36.10M, wrought steel; with wall thickness not less than Schedule 30 and not more than Schedule 40. Pipe ends may be factory or field formed to match joining method.

C. Thinwall Galvanized- Black-Steel Pipe: ASTM A 135 or ASTM A 795/A 795M, threadable, with wall thickness less than Schedule 30 and equal to or greater than Schedule 10. Pipe ends may be factory or field formed to match joining method.

D. Schedule 5 Steel Pipe: ASTM A 135 or ASTM A 795/A 795M, lightwall, with plain ends.

E. Galvanized- and Black-Steel Pipe Nipples: ASTM A 733, made of ASTM A 53/A 53M, standard-weight, seamless steel pipe with threaded ends.

F. Galvanized and Uncoated, Steel Couplings: ASTM A 865, threaded.

G. Galvanized and Uncoated, Gray-Iron Threaded Fittings: ASME B16.4, Class 125, standard pattern.

H. Malleable- or Ductile-Iron Unions: UL 860.

I. Cast-Iron Flanges: ASME 16.1, Class 125.

J. Steel Flanges and Flanged Fittings: ASME B16.5, Class 150.

K. Steel Welding Fittings: ASTM A 234/A 234M and ASME B16.9.

L. Grooved-Joint, Steel-Pipe Appurtenances:

1. Manufacturers: Subject to compliance with requirements, available manufacturers offering products that may be incorporated into the Work include, but are not limited to, the following:

    a. Anvil International, Inc.
    b. Corcoran Piping System Co.
    c. National Fittings, Inc.
    d. Shurjoint Piping Products.
    e. Tyco Fire & Building Products LP.
    f. Victaulic Company.

2. Pressure Rating: 250 psig (1725 kPa) minimum.
3. Galvanized and Uncoated, Grooved-End Fittings for Steel Piping: ASTM A 47/A 47M, malleable-iron casting or ASTM A 536, ductile-iron casting; with dimensions matching steel pipe.
4. Grooved-End-Pipe Couplings for Steel Piping: AWWA C606 and UL 213, rigid pattern, unless otherwise indicated, for steel-pipe dimensions. Include ferrous housing sections, EPDM-rubber gasket, and bolts and nuts.

M. Steel Pressure-Seal Fittings: UL 213, FM-approved, 175-psig (1200-kPa) pressure rating with steel housing, rubber O-rings, and pipe stop; for use with fitting manufacturers' pressure-seal tools.

1. Manufacturers: Subject to compliance with requirements, available manufacturers offering products that may be incorporated into the Work include, but are not limited to, the following:

a. Victaulic Company.

2.3 PIPING JOINING MATERIALS

A. Pipe-Flange Gasket Materials: AWWA C110, rubber, flat face, 1/8 inch (3.2 mm) thick or ASME B16.21, nonmetallic and asbestos free.

1. Class 125, Cast-Iron Flat-Face Flanges: Full-face gaskets.

B. Metal, Pipe-Flange Bolts and Nuts: ASME B18.2.1, carbon steel unless otherwise indicated.

C. Welding Filler Metals: Comply with AWS D10.12M/D10.12 for welding materials appropriate for wall thickness and chemical analysis of steel pipe being welded.

2.4 LISTED FIRE-PROTECTION VALVES

A. General Requirements:

1. Valves shall be UL listed or FM approved.
2. Minimum Pressure Rating: 175 psig (1200 kPa).

B. Check Valves:

1. Manufacturers: Subject to compliance with requirements, available manufacturers offering products that may be incorporated into the Work include, but are not limited to, the following:

a. AFAC Inc.
b. American Cast Iron Pipe Company; Waterous Company Subsidiary.
c. Anvil International, Inc.
d. Clow Valve Company; a division of McWane, Inc.
e. Crane Co.; Crane Valve Group; Crane Valves.
f. Crane Co.; Crane Valve Group; Jenkins Valves.
g. Crane Co.; Crane Valve Group; Stockham Division.

h. Fire-End & Croker Corporation.
i. Fire Protection Products, Inc.
j. Fivalco Inc.
k. Globe Fire Sprinkler Corporation.
l. Groeniger & Company.
m. Kennedy Valve; a division of McWane, Inc.
n. Matco-Norca.
o. Metraflex, Inc.
p. Milwaukee Valve Company.
q. Mueller Co.; Water Products Division.
r. NIBCO INC.
s. Potter Roemer.
t. Reliable Automatic Sprinkler Co., Inc.
u. Shurjoint Piping Products.
v. Tyco Fire & Building Products LP.
w. United Brass Works, Inc.
x. Venus Fire Protection Ltd.
y. Victaulic Company.
z. Viking Corporation.
aa. Watts Water Technologies, Inc.

2. Standard: UL 312.
3. Pressure Rating: 250 psig (1725 kPa) minimum.
4. Type: Swing check.
5. Body Material: Cast iron.
6. End Connections: Flanged or grooved.

C. Bronze OS&Y Gate Valves:

1. Manufacturers: Subject to compliance with requirements, available manufacturers offering products that may be incorporated into the Work include, but are not limited to, the following:

a. Crane Co.; Crane Valve Group; Crane Valves.
b. Crane Co.; Crane Valve Group; Stockham Division.
c. Milwaukee Valve Company.
d. NIBCO INC.
e. United Brass Works, Inc.

2. Standard: UL 262.
3. Pressure Rating: 175 psig (1200 kPa).
4. Body Material: Bronze.
5. End Connections: Threaded.

D. Iron OS&Y Gate Valves:

1. Manufacturers: Subject to compliance with requirements, available manufacturers offering products that may be incorporated into the Work include, but are not limited to, the following:

a. American Cast Iron Pipe Company; Waterous Company Subsidiary.

b. American Valve, Inc.
c. Clow Valve Company; a division of McWane, Inc.
d. Crane Co.; Crane Valve Group; Crane Valves.
e. Crane Co.; Crane Valve Group; Jenkins Valves.
f. Crane Co.; Crane Valve Group; Stockham Division.
g. Hammond Valve.
h. Milwaukee Valve Company.
i. Mueller Co.; Water Products Division.
j. NIBCO INC.
k. Shurjoint Piping Products.
l. Tyco Fire & Building Products LP.
m. United Brass Works, Inc.
n. Watts Water Technologies, Inc.

2. Standard: UL 262.
3. Pressure Rating: 250 psig (1725 kPa) minimum.
4. Body Material: Cast or ductile iron.
5. End Connections: Flanged or grooved.

E. Indicating-Type Butterfly Valves:

1. Manufacturers: Subject to compliance with requirements, available manufacturers offering products that may be incorporated into the Work include, but are not limited to, the following:

a. Anvil International, Inc.
b. Fivalco Inc.
c. Global Safety Products, Inc.
d. Kennedy Valve; a division of McWane, Inc.
e. Milwaukee Valve Company.
f. NIBCO INC.
g. Shurjoint Piping Products.
h. Tyco Fire & Building Products LP.
i. Victaulic Company.

2. Standard: UL 1091.
3. Pressure Rating: 175 psig (1200 kPa) minimum.
4. Valves NPS 2 (DN 50) and Smaller:

a. Valve Type: Ball or butterfly.
b. Body Material: Bronze.
c. End Connections: Threaded.

5. Valves NPS 2-1/2 (DN 65) and Larger:

a. Valve Type: Butterfly.
b. Body Material: Cast or ductile iron.
c. End Connections: Flanged, grooved, or wafer.

6. Valve Operation: Integral electrical, 115-V ac, prewired, two-circuit, supervisory switch indicating device.

2.5 TRIM AND DRAIN VALVES

A. General Requirements:

1. Standard: UL's "Fire Protection Equipment Directory" listing or "Approval Guide," published by FM Global, listing.
2. Minimum Pressure Rating: 175 psig (1200 kPa).

B. Ball Valves:

1. Manufacturers: Subject to compliance with requirements, available manufacturers offering products that may be incorporated into the Work include, but are not limited to, the following:

    a. Affiliated Distributors.
    b. Anvil International, Inc.
    c. Barnett.
    d. Conbraco Industries, Inc.; Apollo Valves.
    e. Fire-End & Croker Corporation.
    f. Fire Protection Products, Inc.
    g. Flowserve.
    h. FNW.
    i. Jomar International, Ltd.
    j. Kennedy Valve; a division of McWane, Inc.
    k. Kitz Corporation.
    l. Legend Valve.
    m. Metso Automation USA Inc.
    n. Milwaukee Valve Company.
    o. NIBCO INC.
    p. Potter Roemer.
    q. Red-White Valve Corporation.
    r. Southern Manufacturing Group.
    s. Stewart, M. A. and Sons Ltd.
    t. Tyco Fire & Building Products LP.
    u. Victaulic Company.
    v. Watts Water Technologies, Inc.

2.6 SPECIALTY VALVES

A. General Requirements:

1. Standard: UL's "Fire Protection Equipment Directory" listing or "Approval Guide," published by FM Global, listing.
2. Minimum Pressure Rating: 175 psig (1200 kPa).
3. Body Material: Cast or ductile iron.
4. Size: Same as connected piping.
5. End Connections: Flanged or grooved.

B. Alarm Valves:

1. Manufacturers: Subject to compliance with requirements, available manufacturers offering products that may be incorporated into the Work include, but are not limited to, the following:

    a. AFAC Inc.
    b. Globe Fire Sprinkler Corporation.
    c. Reliable Automatic Sprinkler Co., Inc.
    d. Tyco Fire & Building Products LP.
    e. Venus Fire Protection Ltd.
    f. Victaulic Company.
    g. Viking Corporation.

2. Standard: UL 193.
3. Design: For horizontal or vertical installation.
4. Include trim sets for bypass, drain, electrical sprinkler alarm switch, pressure gages, retarding chamber, and fill-line attachment with strainer.
5. Drip Cup Assembly: Pipe drain without valves and separate from main drain piping.
6. Drip Cup Assembly: Pipe drain with check valve to main drain piping.

C. Automatic (Ball Drip) Drain Valves:

1. Manufacturers: Subject to compliance with requirements, available manufacturers offering products that may be incorporated into the Work include, but are not limited to, the following:

    a. AFAC Inc.
    b. Reliable Automatic Sprinkler Co., Inc.
    c. Tyco Fire & Building Products LP.

2. Standard: UL 1726.
3. Pressure Rating: 175 psig (1200 kPa) minimum.
4. Type: Automatic draining, ball check.
5. Size: NPS 3/4 (DN 20).
6. End Connections: Threaded.

2.7 FIRE-DEPARTMENT CONNECTIONS

A. Flush-Type, Fire-Department Connection:

1. Manufacturers: Subject to compliance with requirements, available manufacturers offering products that may be incorporated into the Work include, but are not limited to, the following:

    a. AFAC Inc.
    b. Elkhart Brass Mfg. Company, Inc.
    c. GMR International Equipment Corporation.
    d. Guardian Fire Equipment, Inc.
    e. Potter Roemer.

2. Standard: UL 405.

3. Type: Flush, for wall mounting.
4. Pressure Rating: 175 psig (1200 kPa) minimum.
5. Body Material: Corrosion-resistant metal.
6. Inlets: Brass with threads according to NFPA 1963 and matching local fire-department sizes and threads. Include extension pipe nipples, brass lugged swivel connections, and check devices or clappers.
7. Caps: Brass, lugged type, with gasket and chain.
8. Escutcheon Plate: Rectangular, brass, wall type.
9. Outlet: With pipe threads.
10. Body Style: Horizontal unless otherwise indicated on architectural plans.
11. Number of Inlets: Two.
12. Escutcheon Plate Marking: Similar to "AUTO SPKR & STANDPIPE" or "AUTO SPKR" as appropriate for the project.
13. Finish: Polished chrome plated.

2.8 SPRINKLER SPECIALTY PIPE FITTINGS

A. Branch Outlet Fittings:

1. Manufacturers: Subject to compliance with requirements, available manufacturers offering products that may be incorporated into the Work include, but are not limited to, the following:

   a. Anvil International, Inc.
   b. National Fittings, Inc.
   c. Shurjoint Piping Products.
   d. Tyco Fire & Building Products LP.
   e. Victaulic Company.

2. Standard: UL 213.
3. Pressure Rating: 175 psig (1200 kPa) minimum.
4. Body Material: Ductile-iron housing with EPDM seals and bolts and nuts.
5. Type: Mechanical-T and -cross fittings.
6. Configurations: Snap-on and strapless, ductile-iron housing with branch outlets.
7. Size: Of dimension to fit onto sprinkler main and with outlet connections as required to match connected branch piping.
8. Branch Outlets: Grooved, plain-end pipe, or threaded.

B. Flow Detection and Test Assemblies:

1. Manufacturers: Subject to compliance with requirements, available manufacturers offering products that may be incorporated into the Work include, but are not limited to, the following:

   a. AGF Manufacturing Inc.
   b. Reliable Automatic Sprinkler Co., Inc.
   c. Tyco Fire & Building Products LP.
   d. Victaulic Company.

2. Standard: UL's "Fire Protection Equipment Directory" listing or "Approval Guide," published by FM Global, listing.
3. Pressure Rating: 175 psig (1200 kPa) minimum.
4. Body Material: Cast- or ductile-iron housing with orifice, sight glass, and integral test valve.
5. Size: Same as connected piping.
6. Inlet and Outlet: Threaded.

C. Branch Line Testers:

1. Manufacturers: Subject to compliance with requirements, available manufacturers offering products that may be incorporated into the Work include, but are not limited to, the following:

   a. Elkhart Brass Mfg. Company, Inc.
   b. Fire-End & Croker Corporation.
   c. Potter Roemer.

2. Standard: UL 199.
3. Pressure Rating: 175 psig (1200 kPa) minimum.
4. Body Material: Brass.
5. Size: Same as connected piping.
6. Inlet: Threaded.
7. Drain Outlet: Threaded and capped.
8. Branch Outlet: Threaded, for sprinkler.

D. Sprinkler Inspector's Test Fittings:

1. Manufacturers: Subject to compliance with requirements, available manufacturers offering products that may be incorporated into the Work include, but are not limited to, the following:

   a. AGF Manufacturing Inc.
   b. Triple R Specialty.
   c. Tyco Fire & Building Products LP.
   d. Victaulic Company.
   e. Viking Corporation.

2. Standard: UL's "Fire Protection Equipment Directory" listing or "Approval Guide," published by FM Global, listing.
3. Pressure Rating: 175 psig (1200 kPa) minimum.
4. Body Material: Cast- or ductile-iron housing with sight glass.
5. Size: Same as connected piping.
6. Inlet and Outlet: Threaded.

E. Adjustable Drop Nipples:

1. Manufacturers: Subject to compliance with requirements, available manufacturers offering products that may be incorporated into the Work include, but are not limited to, the following:

a. CECA, LLC.
b. Corcoran Piping System Co.
c. Merit Manufacturing; a division of Anvil International, Inc.

2. Standard: UL 1474.
3. Pressure Rating: 250 psig (1725 kPa) minimum.
4. Body Material: Steel pipe with EPDM-rubber O-ring seals.
5. Size: Same as connected piping.
6. Length: Adjustable.
7. Inlet and Outlet: Threaded.

F. Flexible, Sprinkler Hose Fittings:

1. Manufacturers: Subject to compliance with requirements, available manufacturers offering products that may be incorporated into the Work include, but are not limited to, the following:

a. Fivalco Inc.
b. FlexHead Industries, Inc.
c. Gateway Tubing, Inc.

2. Standard: UL 1474.
3. Type: Flexible hose for connection to sprinkler, and with bracket for connection to ceiling grid.
4. Pressure Rating: 175 psig (1200 kPa) minimum.
5. Size: Same as connected piping, for sprinkler.

2.9 SPRINKLERS

A. Manufacturers: Subject to compliance with requirements, available manufacturers offering products that may be incorporated into the Work include, but are not limited to, the following:

1. AFAC Inc.
2. Globe Fire Sprinkler Corporation.
3. Reliable Automatic Sprinkler Co., Inc.
4. Tyco Fire & Building Products LP.
5. Venus Fire Protection Ltd.
6. Victaulic Company.
7. Viking Corporation.

B. General Requirements:

1. Standard: UL's "Fire Protection Equipment Directory" listing or "Approval Guide," published by FM Global, listing.
2. Pressure Rating for Residential Sprinklers: 175 psig (1200 kPa) maximum.
3. Pressure Rating for Automatic Sprinklers: 175 psig (1200 kPa) minimum.
4. Pressure Rating for High-Pressure Automatic Sprinklers: 250 psig (1725 kPa) minimum.

C. Automatic Sprinklers with Heat-Responsive Element:

1. Early-Suppression, Fast-Response Applications: UL 1767.
2. Nonresidential Applications: UL 199.
3. Residential Applications: UL 1626.
4. Characteristics: Nominal 1/2-inch (12.7-mm) orifice with Discharge Coefficient K of 5.6, and for "Ordinary" temperature classification rating unless otherwise indicated or required by application.

D. Sprinkler Finishes:

1. Chrome plated.
2. Bronze.
3. Painted.

E. Special Coatings:

1. Wax.
2. Lead.
3. Corrosion-resistant paint.

F. Sprinkler Escutcheons: Materials, types, and finishes for the following sprinkler mounting applications. Escutcheons for concealed, flush, and recessed-type sprinklers are specified with sprinklers.

1. Ceiling Mounting: Chrome-plated steel, one piece, flat.
2. Sidewall Mounting: Chrome-plated steel, one piece, flat.

2.10 ALARM DEVICES

A. Alarm-device types shall match piping and equipment connections.

B. Water-Motor-Operated Alarm:

1. Manufacturers: Subject to compliance with requirements, available manufacturers offering products that may be incorporated into the Work include, but are not limited to, the following:

   a. Globe Fire Sprinkler Corporation.
   b. Tyco Fire & Building Products LP.
   c. Victaulic Company.
   d. Viking Corporation.

2. Standard: UL 753.
3. Type: Mechanically operated, with Pelton wheel.
4. Alarm Gong: Cast aluminum with red-enamel factory finish.
5. Size: 10-inch (250-mm) diameter.
6. Components: Shaft length, bearings, and sleeve to suit wall construction.
7. Inlet: NPS 3/4 (DN 20).
8. Outlet: NPS 1 (DN 25) drain connection.

C. Water-Flow Indicators:

1. Manufacturers: Subject to compliance with requirements, available manufacturers offering products that may be incorporated into the Work include, but are not limited to, the following:

    a. ADT Security Services, Inc.
    b. McDonnell & Miller; ITT Industries.
    c. Potter Electric Signal Company.
    d. System Sensor; a Honeywell company.
    e. Viking Corporation.
    f. Watts Industries (Canada) Inc.

2. Standard: UL 346.
3. Water-Flow Detector: Electrically supervised.
4. Components: Two single-pole, double-throw circuit switches for isolated alarm and auxiliary contacts, 7 A, 125-V ac and 0.25 A, 24-V dc; complete with factory-set, field-adjustable retard element to prevent false signals and tamperproof cover that sends signal if removed.
5. Type: Paddle operated.
6. Pressure Rating: 250 psig (1725 kPa).
7. Design Installation: Horizontal or vertical.

D. Valve Supervisory Switches:

1. Manufacturers: Subject to compliance with requirements, available manufacturers offering products that may be incorporated into the Work include, but are not limited to, the following:

    a. Fire-Lite Alarms, Inc.; a Honeywell company.
    b. Kennedy Valve; a division of McWane, Inc.
    c. Potter Electric Signal Company.
    d. System Sensor; a Honeywell company.

2. Standard: UL 346.
3. Type: Electrically supervised.
4. Components: Single-pole, double-throw switch with normally closed contacts.
5. Design: Signals that controlled valve is in other than fully open position.

2.11 PRESSURE GAGES

A. Manufacturers: Subject to compliance with requirements, available manufacturers offering products that may be incorporated into the Work include, but are not limited to, the following:

1. AMETEK; U.S. Gauge Division.
2. Ashcroft, Inc.
3. Brecco Corporation.
4. WIKA Instrument Corporation.

B. Standard: UL 393.

C. Dial Size: 3-1/2- to 4-1/2-inch (90- to 115-mm) diameter.

D. Pressure Gage Range: 0 to 250 psig (0 to 1725 kPa) minimum.

E. Water System Piping Gage: Include "WATER" or "AIR/WATER" label on dial face.

F. Air System Piping Gage: Include retard feature and "AIR" or "AIR/WATER" label on dial face.

PART 3 - EXECUTION

3.1 SERVICE-ENTRANCE PIPING

A. Connect sprinkler piping to water-service piping for service entrance to building.

B. Install shutoff valve, backflow preventer (if indicated on plans), pressure gage, drain, and other accessories indicated at connection to water-service piping.

3.2 PIPING INSTALLATION

A. Locations and Arrangements: Drawing plans, schematics, and diagrams indicate general location and arrangement of piping. Install piping as indicated, as far as practical.

1. Deviations from approved working plans for piping require written approval from authorities having jurisdiction. File written approval with Architect before deviating from approved working plans.

B. Piping Standard: Comply with requirements for installation of sprinkler piping in NFPA 13.

C. Install seismic restraints on piping. Comply with requirements for seismic-restraint device materials and installation in NFPA 13.

D. Use listed fittings to make changes in direction, branch takeoffs from mains, and reductions in pipe sizes.

E. Install unions adjacent to each valve in pipes NPS 2 (DN 50) and smaller.

F. Install flanges, flange adapters, or couplings for grooved-end piping on valves, apparatus, and equipment having NPS 2-1/2 (DN 65) and larger end connections.

G. Install "Inspector's Test Connections" in sprinkler system piping, complete with shutoff valve, and sized and located according to NFPA 13.

H. Install sprinkler piping with drains for complete system drainage.

I. Install sprinkler control valves, test assemblies, and drain risers adjacent to standpipes when sprinkler piping is connected to standpipes.

J. Install automatic (ball drip) drain valve at each check valve for fire-department connection, to drain piping between fire-department connection and check valve. Install drain piping to and spill over floor drain or to outside building.

K. Install alarm devices in piping systems.

L. Install hangers and supports for sprinkler system piping according to NFPA 13. Comply with requirements for hanger materials in NFPA 13.

M. Install pressure gages on riser or feed main, at each sprinkler test connection, and at top of each standpipe. Include pressure gages with connection not less than NPS 1/4 (DN 8) and with soft metal seated globe valve, arranged for draining pipe between gage and valve. Install gages to permit removal, and install where they will not be subject to freezing.

N. Fill sprinkler system piping with water.

O. Install electric heating cables and pipe insulation on sprinkler piping in areas subject to freezing. Comply with requirements for heating cables in Division 21 "Heat Tracing for Fire-Suppression Piping" and for piping insulation in Division 21 Section "Fire-Suppression Systems Insulation."

3.3 JOINT CONSTRUCTION

A. Install couplings, flanges, flanged fittings, unions, nipples, and transition and special fittings that have finish and pressure ratings same as or higher than system's pressure rating for aboveground applications unless otherwise indicated.

B. Install unions adjacent to each valve in pipes NPS 2 (DN 50) and smaller.

C. Install flanges, flange adapters, or couplings for grooved-end piping on valves, apparatus, and equipment having NPS 2-1/2 (DN 65) and larger end connections.

D. Ream ends of pipes and tubes and remove burrs. Bevel plain ends of steel pipe.

E. Remove scale, slag, dirt, and debris from inside and outside of pipes, tubes, and fittings before assembly.

F. Flanged Joints: Select appropriate gasket material in size, type, and thickness suitable for water service. Join flanges with gasket and bolts according to ASME B31.9.

G. Threaded Joints: Thread pipe with tapered pipe threads according to ASME B1.20.1. Cut threads full and clean using sharp dies. Ream threaded pipe ends to remove burrs and restore full ID. Join pipe fittings and valves as follows:

1. Apply appropriate tape or thread compound to external pipe threads.
2. Damaged Threads: Do not use pipe or pipe fittings with threads that are corroded or damaged.

H. Twist-Locked Joints: Insert plain end of steel pipe into plain-end-pipe fitting. Rotate retainer lugs one-quarter turn or tighten retainer pin.

I. Steel-Piping, Pressure-Sealed Joints: Join lightwall steel pipe and steel pressure-seal fittings with tools recommended by fitting manufacturer.

J. Welded Joints: Construct joints according to AWS D10.12M/D10.12, using qualified processes and welding operators according to "Quality Assurance" Article.

1. Shop weld pipe joints where welded piping is indicated. Do not use welded joints for galvanized-steel pipe.

K. Steel-Piping, Cut-Grooved Joints: Cut square-edge groove in end of pipe according to AWWA C606. Assemble coupling with housing, gasket, lubricant, and bolts. Join steel pipe and grooved-end fittings according to AWWA C606 for steel-pipe joints.

L. Steel-Piping, Roll-Grooved Joints: Roll rounded-edge groove in end of pipe according to AWWA C606. Assemble coupling with housing, gasket, lubricant, and bolts. Join steel pipe and grooved-end fittings according to AWWA C606 for steel-pipe grooved joints.

M. Steel-Piping, Pressure-Sealed Joints: Join Schedule 5 steel pipe and steel pressure-seal fittings with tools recommended by fitting manufacturer.

N. Dissimilar-Material Piping Joints: Make joints using adapters compatible with materials of both piping systems.

3.4 VALVE AND SPECIALTIES INSTALLATION

A. Install listed fire-protection valves, trim and drain valves, specialty valves and trim, controls, and specialties according to NFPA 13 and authorities having jurisdiction.

B. Install listed fire-protection shutoff valves supervised open, located to control sources of water supply except from fire-department connections. Install permanent identification signs indicating portion of system controlled by each valve.

C. Install check valve in each water-supply connection. Install backflow preventers instead of check valves in potable-water-supply sources.

D. Specialty Valves:

1. General Requirements: Install in vertical position for proper direction of flow, in main supply to system.
2. Alarm Valves: Include bypass check valve and retarding chamber drain-line connection.

3.5 SPRINKLER INSTALLATION

A. Install sprinklers in suspended ceilings in center of acoustical ceiling panels.

B. Install dry-type sprinklers with water supply from heated space. Do not install pendent or sidewall, wet-type sprinklers in areas subject to freezing.

C. Install sprinklers into flexible, sprinkler hose fittings and install hose into bracket on ceiling grid.

3.6 FIRE-DEPARTMENT CONNECTION INSTALLATION

A. Install wall-type, fire-department connections.

B. Install automatic (ball drip) drain valve at each check valve for fire-department connection.

3.7 FIELD QUALITY CONTROL

A. Perform tests and inspections.

B. Tests and Inspections:

1. Leak Test: After installation, charge systems and test for leaks. Repair leaks and retest until no leaks exist.
2. Test and adjust controls and safeties. Replace damaged and malfunctioning controls and equipment.
3. Flush, test, and inspect sprinkler systems according to NFPA 13, "Systems Acceptance" Chapter.
4. Energize circuits to electrical equipment and devices.
5. Start and run excess-pressure pumps.
6. Coordinate with fire-alarm tests. Operate as required.
7. Coordinate with fire-pump tests. Operate as required.
8. Verify that equipment hose threads are same as local fire-department equipment.

C. Sprinkler piping system will be considered defective if it does not pass tests and inspections.

D. Prepare test and inspection reports.

3.8 CLEANING

A. Clean dirt and debris from sprinklers.

B. Remove and replace sprinklers with paint other than factory finish.

3.9 PIPING SCHEDULE

A. Piping between Fire-Department Connections and Check Valves: Galvanized, standard-weight steel pipe with grooved ends; grooved-end fittings; grooved-end-pipe couplings; and grooved joints.

B. Sprinkler specialty fittings may be used, downstream of control vales, instead of specified fittings.

C. Wet-pipe sprinkler system, NPS 2 (DN 50) and smaller, shall be one of the following:

1. Standard-weight or Schedule 30, black-steel pipe with threaded ends; uncoated, gray-iron threaded fittings; and threaded joints.
2. Standard-weight or Schedule 30, black-steel pipe with cut- or roll-grooved ends; uncoated, grooved-end fittings for steel piping; grooved-end-pipe couplings for steel piping; and grooved joints.
3. Standard-weight or Schedule 30, black-steel pipe with plain ends; steel welding fittings; and welded joints.

D. Standard-pressure, wet-pipe sprinkler system, NPS 2-1/2 to NPS 6 (DN 65 to DN 150), shall be one of the following:
   1. Standard-weight or Schedule 30, black-steel pipe with cut- or roll-grooved ends; uncoated, grooved-end fittings for steel piping; grooved-end-pipe couplings for steel piping; and grooved joints.
   2. Standard-weight or Schedule 30, black-steel pipe with plain ends; steel welding fittings; and welded joints.
   3. Thinwall black-steel pipe with roll-grooved ends; uncoated, grooved-end fittings for steel piping; grooved-end-pipe couplings for steel piping; and grooved joints.
   4. Thinwall black-steel pipe with plain ends; welding fittings; and welded joints.

3.10 SPRINKLER SCHEDULE

A. Use sprinkler types in specific areas as indicated on plans and schedules on drawings.

END OF SECTION 211313

SECTION 220500 - COMMON WORK RESULTS FOR PLUMBING

PART 1 - GENERAL

1.1 SUMMARY

A. This Section includes the following:

1. Dielectric fittings.
2. Mechanical sleeve seals.
3. Sleeves.
4. Escutcheons.
5. Grout.
6. Plumbing demolition.
7. Equipment installation requirements common to equipment sections.
8. Concrete bases.
9. Supports and anchorages.

1.2 DEFINITIONS

A. Finished Spaces: Spaces other than plumbing and electrical equipment rooms, furred spaces, pipe chases, unheated spaces immediately below roof, spaces above ceilings, unexcavated spaces, crawlspaces, and tunnels.

B. Exposed, Interior Installations: Exposed to view indoors. Examples include finished occupied spaces and plumbing equipment rooms.

C. Exposed, Exterior Installations: Exposed to view outdoors or subject to outdoor ambient temperatures and weather conditions. Examples include rooftop locations.

D. Concealed, Interior Installations: Concealed from view and protected from physical contact by building occupants. Examples include above ceilings and in chases.

E. Concealed, Exterior Installations: Concealed from view and protected from weather conditions and physical contact by building occupants but subject to outdoor ambient temperatures. Examples include installations within unheated shelters.

1.3 SUBMITTALS

A. Mechanical sleeve seals.

1.4 QUALITY ASSURANCE

A. Steel Support Welding: Qualify processes and operators according to AWS D1.1, "Structural Welding Code--Steel."

B. Steel Pipe Welding: Qualify processes and operators according to ASME Boiler and Pressure Vessel Code: Section IX, "Welding and Brazing Qualifications."

1. Comply with provisions in ASME B31 Series, "Code for Pressure Piping."
2. Certify that each welder has passed AWS qualification tests for welding processes involved and that certification is current.

C. Electrical Characteristics for Plumbing Equipment: Equipment of higher electrical characteristics may be furnished provided such proposed equipment is approved in writing and connecting electrical services, circuit breakers, and conduit sizes are appropriately modified. If minimum energy ratings or efficiencies are specified, equipment shall comply with requirements.

PART 2 - PRODUCTS

2.1 DIELECTRIC FITTINGS

A. Description: Combination fitting of copper alloy and ferrous materials with threaded, solder-joint, plain, or weld-neck end connections that match piping system materials.

B. Insulating Material: Suitable for system fluid, pressure, and temperature.

C. Dielectric Unions: Factory-fabricated, union assembly, for 250-psig (1725-kPa) minimum working pressure at 180 deg F (82 deg C).

D. Dielectric Flanges: Factory-fabricated, companion-flange assembly, for 150- or 300-psig (1035- or 2070-kPa) minimum working pressure as required to suit system pressures.

E. Dielectric Couplings: Galvanized-steel coupling with inert and noncorrosive, thermoplastic lining; threaded ends; and 300-psig (2070-kPa) minimum working pressure at 225 deg F (107 deg C).

F. Dielectric Nipples: Electroplated steel nipple with inert and noncorrosive, thermoplastic lining; plain, threaded, or grooved ends; and 300-psig (2070-kPa) minimum working pressure at 225 deg F (107 deg C).

2.2 MECHANICAL SLEEVE SEALS

A. Description: Modular sealing element unit, designed for field assembly, to fill annular space between pipe and sleeve.

B. Sealing Elements: EPDM or NBR interlocking links shaped to fit surface of pipe. Include type and number required for pipe material and size of pipe.

C. Pressure Plates: Stainless steel. Include two for each sealing element.

D. Connecting Bolts and Nuts: Stainless steel of length required to secure pressure plates to sealing elements. Include one for each sealing element.

2.3 SLEEVES

A. Galvanized-Steel Sheet: 0.0239-inch (0.6-mm) minimum thickness; round tube closed with welded longitudinal joint.

B. Steel Pipe: ASTM A 53, Type E, Grade B, Schedule 40, galvanized, plain ends.

C. Cast Iron: Cast or fabricated "wall pipe" equivalent to ductile-iron pressure pipe, with plain ends and integral waterstop, unless otherwise indicated.

D. Stack Sleeve Fittings: Manufactured, cast-iron sleeve with integral clamping flange. Include clamping ring and bolts and nuts for membrane flashing.

   1. Underdeck Clamp: Clamping ring with set screws.

E. Molded PVC: Permanent, with nailing flange for attaching to wooden forms.

F. PVC Pipe: ASTM D 1785, Schedule 40.

G. Molded PE: Reusable, PE, tapered-cup shaped, and smooth-outer surface with nailing flange for attaching to wooden forms.

2.4 ESCUTCHEONS

A. Description: Manufactured wall and ceiling escutcheons and floor plates, with an ID to closely fit around pipe, tube, and insulation of insulated piping and an OD that completely covers opening.

B. One-Piece, Deep-Pattern Type: Deep-drawn, box-shaped brass with polished chrome-plated finish.

C. One-Piece, Cast-Brass Type: With set screw.

   1. Finish: Polished chrome-plated and rough brass.

D. Split-Casting, Cast-Brass Type: With concealed hinge and set screw.

   1. Finish: Polished chrome-plated and rough brass.

2.5 GROUT

A. Description: ASTM C 1107, Grade B, nonshrink and nonmetallic, dry hydraulic-cement grout.

   1. Characteristics: Post-hardening, volume-adjusting, nonstaining, noncorrosive, nongaseous, and recommended for interior and exterior applications.
   2. Design Mix: 5000-psi (34.5-MPa), 28-day compressive strength.
   3. Packaging: Premixed and factory packaged.

PART 3 - EXECUTION

3.1 PLUMBING DEMOLITION

A. Refer to other divisions for cutting and patching of surfaces; structure demolition; and for general demolition requirements and procedures.

B. Disconnect, demolish, and remove plumbing systems, equipment, and components indicated to be removed.

1. Piping to Be Removed: Remove portion of piping indicated to be removed and cap or plug remaining piping with same or compatible piping material.
2. Piping to Be Abandoned in Place: Drain piping and cap or plug piping with same or compatible piping material.
3. Equipment to Be Removed: Disconnect and cap services and remove equipment.
4. Equipment to Be Removed and Reinstalled: Disconnect and cap services and remove, clean, and store equipment; when appropriate, reinstall, reconnect, and make equipment operational.
5. Equipment to Be Removed and Salvaged: Disconnect and cap services and remove equipment and deliver to Owner.

C. If pipe, insulation, or equipment to remain is damaged in appearance or is unserviceable, remove damaged or unserviceable portions and replace with new products of equal capacity and quality.

3.2 PIPING SYSTEMS - COMMON REQUIREMENTS

A. Install piping according to the following requirements and Division 22 Sections specifying piping systems.

B. Drawing plans, schematics, and diagrams indicate general location and arrangement of piping systems. Indicated locations and arrangements were used to size pipe and calculate friction loss, expansion, pump sizing, and other design considerations. Install piping as indicated unless deviations to layout are approved on Coordination Drawings.

C. Install piping in concealed locations, unless otherwise indicated and except in equipment rooms and service areas.

D. Install piping indicated to be exposed and piping in equipment rooms and service areas at right angles or parallel to building walls. Diagonal runs are prohibited unless specifically indicated otherwise.

E. Install piping above accessible ceilings to allow sufficient space for ceiling panel removal.

F. Install piping to permit valve servicing.

G. Install piping at indicated slopes.

H. Install piping free of sags and bends.

I. Install fittings for changes in direction and branch connections.

J. Install piping to allow application of insulation.

K. Select system components with pressure rating equal to or greater than system operating pressure.

L. Install escutcheons for penetrations of walls, ceilings, and floors.

M. Install sleeves for pipes passing through concrete and masonry walls, and concrete floor and roof slabs.

N. Verify final equipment locations for roughing-in.

O. Refer to equipment specifications in other Sections of these Specifications for roughing-in requirements.

3.3 PIPING CONNECTIONS

A. Make connections according to the following, unless otherwise indicated:

1. Install unions, in piping NPS 2 (DN 50) and smaller, adjacent to each valve and at final connection to each piece of equipment.
2. Install flanges, in piping NPS 2-1/2 (DN 65) and larger, adjacent to flanged valves and at final connection to each piece of equipment.
3. Dry Piping Systems: Install dielectric unions and flanges to connect piping materials of dissimilar metals.
4. Wet Piping Systems: Install dielectric coupling and nipple fittings to connect piping materials of dissimilar metals.

3.4 EQUIPMENT INSTALLATION - COMMON REQUIREMENTS

A. Install equipment to allow maximum possible headroom unless specific mounting heights are indicated.

B. Install equipment level and plumb, parallel and perpendicular to other building systems and components in exposed interior spaces, unless otherwise indicated.

C. Install plumbing equipment to facilitate service, maintenance, and repair or replacement of components. Connect equipment for ease of disconnecting, with minimum interference to other installations. Extend grease fittings to accessible locations.

D. Install equipment to allow right of way for piping installed at required slope.

3.5 CONCRETE BASES

A. Concrete Bases: Anchor equipment to concrete base according to equipment manufacturer's written instructions and according to seismic codes at Project.

1. Construct concrete bases of dimensions indicated, but not less than 4 inches (100 mm) larger in both directions than supported unit.
2. Install dowel rods to connect concrete base to concrete floor. Unless otherwise indicated, install dowel rods on 18-inch (450-mm) centers around the full perimeter of the base.
3. Install epoxy-coated anchor bolts for supported equipment that extend through concrete base, and anchor into structural concrete floor.
4. Place and secure anchorage devices. Use supported equipment manufacturer's setting drawings, templates, diagrams, instructions, and directions furnished with items to be embedded.
5. Install anchor bolts to elevations required for proper attachment to supported equipment.
6. Install anchor bolts according to anchor-bolt manufacturer's written instructions.
7. Use 3000-psi (20.7-MPa), 28-day compressive-strength concrete and reinforcement as specified in other divisions.

3.6 ERECTION OF METAL SUPPORTS AND ANCHORAGES

A. Refer to Division 05 Section "Metal Fabrications" for structural steel.

B. Cut, fit, and place miscellaneous metal supports accurately in location, alignment, and elevation to support and anchor plumbing materials and equipment.

C. Field Welding: Comply with AWS D1.1.

3.7 ERECTION OF WOOD SUPPORTS AND ANCHORAGES

A. Cut, fit, and place wood grounds, nailers, blocking, and anchorages to support, and anchor plumbing materials and equipment.

B. Select fastener sizes that will not penetrate members if opposite side will be exposed to view or will receive finish materials. Tighten connections between members. Install fasteners without splitting wood members.

C. Attach to substrates as required to support applied loads.

3.8 DIELECTRIC FITTING INSTALLATION

A. Install dielectric fittings in piping at connections of dissimilar metal piping and tubing.

B. Dielectric Fittings for NPS 2 (DN 50) and Smaller: Use dielectric unions.

C. Dielectric Fittings for NPS 2-1/2 or Larger (DN 125 or Larger): Use dielectric flange kits.

3.9 SLEEVE INSTALLATION

A. General Requirements: Install sleeves for pipes and tubes passing through penetrations in floors, partitions, roofs, and walls.

B. Sleeves are not required for core-drilled holes.

C. Permanent sleeves are not required for holes formed by removable PE sleeves.

D. Cut sleeves to length for mounting flush with both surfaces unless otherwise indicated.

E. Install sleeves in new partitions, slabs, and walls as they are built.

F. For interior wall penetrations, seal annular space between sleeve and pipe or pipe insulation using joint sealants appropriate for size, depth, and location of joint. Comply with requirements in Division 07 Section "Joint Sealants" for joint sealants.

G. Aboveground, Exterior-Wall Pipe Penetrations: Seal penetrations using sleeves and mechanical sleeve seals. Select sleeve size to allow for 1-inch (25-mm) annular clear space between pipe and sleeve for installing mechanical sleeve seals.

1. Install steel pipe for sleeves smaller than 6 inches (150 mm) in diameter.
2. Install cast-iron "wall pipes" for sleeves 6 inches (150 mm) and larger in diameter.
3. Mechanical Sleeve Seal Installation: Select type and number of sealing elements required for pipe material and size. Position pipe in center of sleeve. Assemble mechanical sleeve seals and install in annular space between pipe and sleeve. Tighten bolts against pressure plates that cause sealing elements to expand and make watertight seal.

H. Underground, Exterior-Wall Pipe Penetrations: Install cast-iron "wall pipes" for sleeves. Seal pipe penetrations using mechanical sleeve seals. Select sleeve size to allow for 1-inch (25-mm) annular clear space between pipe and sleeve for installing mechanical sleeve seals.

1. Mechanical Sleeve Seal Installation: Select type and number of sealing elements required for pipe material and size. Position pipe in center of sleeve. Assemble mechanical sleeve seals and install in annular space between pipe and sleeve. Tighten bolts against pressure plates that cause sealing elements to expand and make watertight seal.

I. Seal space outside of sleeves in concrete slabs and walls with grout.

J. Install sleeves that are large enough to provide 1/4-inch (6.4-mm) annular clear space between sleeve and pipe or pipe insulation unless otherwise indicated.

K. Install sleeve materials according to the following applications:

1. Sleeves for Piping Passing through Concrete Floor Slabs: Steel pipe.
2. Sleeves for Piping Passing through Concrete Floor Slabs of Mechanical Equipment Areas or Other Wet Areas: Steel pipe or Stack sleeve fittings.

a. Extend sleeves 2 inches (50 mm) above finished floor level.
b. For pipes penetrating floors with membrane waterproofing, extend cast-iron sleeve fittings below floor slab as required to secure clamping ring if ring is specified. Secure flashing between clamping flanges. Install section of cast-iron soil pipe to extend sleeve to 2 inches (50 mm) above finished floor level. Comply with requirements in "Sheet Metal Flashing and Trim" specifications listed in other divisions for flashing.

3. Sleeves for Piping Passing through Gypsum-Board Partitions:

   a. PVC pipe or steel pipe sleeves for pipes smaller than NPS 6 (DN 150).
   b. Galvanized-steel sheet sleeves for pipes NPS 6 (DN 150) and larger.
   c. Exception: Sleeves are not required for water supply tubes and waste pipes for individual plumbing fixtures if escutcheons will cover openings.

4. Sleeves for Piping Passing through Concrete Roof Slabs: Steel pipe.
5. Sleeves for Piping Passing through Exterior Concrete Walls:

   a. Steel pipe sleeves for pipes smaller than NPS 6 (DN 150).
   b. Cast-iron wall pipe sleeves for pipes NPS 6 (DN 150) and larger.
   c. Install sleeves that are large enough to provide 1-inch (25-mm) annular clear space between sleeve and pipe or pipe insulation when sleeve seals are used.

L. Fire-Barrier Penetrations: Maintain indicated fire rating of walls, partitions, ceilings, and floors at pipe penetrations. Seal pipe penetrations with firestop materials. Comply with requirements in Division 07 Section "Penetration Firestopping" for firestop materials and installations. Further requirements may be shown on details provided on drawings.

3.10 ESCUTCHEON INSTALLATION

A. Install escutcheons for penetrations of walls, ceilings, and floors.

B. Escutcheons for New Piping:

1. Piping with Fitting or Sleeve Protruding from Wall: One piece, deep pattern.
2. Bare Piping at Wall and Floor Penetrations in Finished Spaces: One piece, cast brass with polished chrome-plated finish.
3. Bare Piping at Ceiling Penetrations in Finished Spaces: One piece or split casting, cast brass with polished chrome-plated finish.
4. Bare Piping in Unfinished Service Spaces: One piece, cast brass with rough-brass finish.
5. Bare Piping in Equipment Rooms: One piece, cast brass.
6. Bare Piping at Floor Penetrations in Equipment Rooms: One-piece floor plate.

C. Escutcheons for Existing Piping:

1. Chrome-Plated Piping: Split casting, cast brass with chrome-plated finish.
2. Insulated Piping: Split plate, stamped steel with concealed or exposed-rivet hinge and spring clips.
3. Bare Piping at Wall and Floor Penetrations in Finished Spaces: Split casting, cast brass with chrome-plated finish.
4. Bare Piping at Ceiling Penetrations in Finished Spaces: Split casting, cast brass with chrome-plated finish.
5. Bare Piping in Unfinished Service Spaces: Split casting, cast brass with rough-brass finish.
6. Bare Piping in Equipment Rooms: Split casting, cast brass.
7. Bare Piping at Floor Penetrations in Equipment Rooms: Split-casting floor plate.

3.11 GROUTING

A. Mix and install grout for plumbing equipment base bearing surfaces, pump and other equipment base plates, and anchors.

B. Clean surfaces that will come into contact with grout.

C. Provide forms as required for placement of grout.

D. Avoid air entrapment during placement of grout.

E. Place grout, completely filling equipment bases.

F. Place grout on concrete bases and provide smooth bearing surface for equipment.

G. Place grout around anchors.

H. Cure placed grout.

END OF SECTION 220500

SECTION 220523 - GENERAL-DUTY VALVES FOR PLUMBING PIPING

PART 1 - GENERAL

1.1 SUMMARY

A. Section Includes:

1. Bronze ball valves.
2. Iron, single-flange butterfly valves.
3. Bronze swing check valves.
4. Iron swing check valves.
5. Iron swing check valves with closure control.
6. Bronze gate valves.
7. Iron gate valves.
8. Bronze globe valves.
9. Iron globe valves.
10. Chainwheels.

B. Related Sections:

1. Division 22 plumbing piping Sections for specialty valves applicable to those Sections only.

1.2 SUBMITTALS

A. Product Data: For each type of valve provided on project.

1.3 QUALITY ASSURANCE

A. ASME Compliance: ASME B16.10 and ASME B16.34 for ferrous valve dimensions and design criteria.

B. NSF Compliance: NSF 61 for valve materials for potable-water service.

PART 2 - PRODUCTS

2.1 GENERAL REQUIREMENTS FOR VALVES

A. Refer to valve schedule articles for applications of valves.

B. Valve Pressure and Temperature Ratings: Not less than indicated and as required for system pressures and temperatures.

C. Valve Sizes: Same as upstream piping unless otherwise indicated.

D. Valve Actuator Types:

1. Gear Actuator: For quarter-turn valves NPS 8 (DN 200) and larger.
2. Handwheel: For valves other than quarter-turn types.
3. Handlever: For quarter-turn valves NPS 6 (DN 150) and smaller.
4. Chainwheel: Device for attachment to valve handwheel, stem, or other actuator; of size and with chain for mounting height, as indicated in the "Valve Installation" Article.

E. Valves in Insulated Piping: With 2-inch (50-mm) stem extensions and the following features:

1. Gate Valves: With rising stem.
2. Ball Valves: With extended operating handle of non-thermal-conductive material, and protective sleeve that allows operation of valve without breaking the vapor seal or disturbing insulation.
3. Butterfly Valves: With extended neck.

F. Valve-End Connections:

1. Flanged: With flanges according to ASME B16.1 for iron valves.
2. Solder Joint: With sockets according to ASME B16.18.
3. Threaded: With threads according to ASME B1.20.1.

2.2 BRONZE BALL VALVES

A. Two-Piece, Full-Port, Bronze Ball Valves with Bronze Trim:

1. Manufacturers: Subject to compliance with requirements, available manufacturers offering products that may be incorporated into the Work include, but are not limited to, the following:

   a. American Valve, Inc.
   b. Conbraco Industries, Inc.; Apollo Valves.
   c. Crane Co.; Crane Valve Group; Crane Valves.
   d. Hammond Valve.
   e. Lance Valves; a division of Advanced Thermal Systems, Inc.
   f. Legend Valve.
   g. Milwaukee Valve Company.
   h. NIBCO INC.
   i. Red-White Valve Corporation.
   j. Watts Regulator Co.; a division of Watts Water Technologies, Inc.

2. Description:

   a. Standard: MSS SP-110.
   b. SWP Rating: 150 psig (1035 kPa).
   c. CWP Rating: 600 psig (4140 kPa).
   d. Body Design: Two piece.
   e. Body Material: Bronze.
   f. Ends: Threaded.
   g. Seats: PTFE or TFE.

h. Stem: Bronze.
i. Ball: Chrome-plated brass.
j. Port: Full.

2.3 IRON, SINGLE-FLANGE BUTTERFLY VALVES

A. 200 CWP, Iron, Single-Flange Butterfly Valves with EPDM Seat and Aluminum-Bronze Disc:

1. Manufacturers: Subject to compliance with requirements, available manufacturers offering products that may be incorporated into the Work include, but are not limited to, the following:

a. ABZ Valve and Controls; a division of ABZ Manufacturing, Inc.
b. Conbraco Industries, Inc.; Apollo Valves.
c. Cooper Cameron Valves; a division of Cooper Cameron Corporation.
d. Crane Co.; Crane Valve Group; Jenkins Valves.
e. Crane Co.; Crane Valve Group; Stockham Division.
f. DeZurik Water Controls.
g. Flo Fab Inc.
h. Hammond Valve.
i. Kitz Corporation.
j. Legend Valve.
k. Milwaukee Valve Company.
l. NIBCO INC.
m. Norriseal; a Dover Corporation company.
n. Red-White Valve Corporation.
o. Spence Strainers International; a division of CIRCOR International, Inc.
p. Watts Regulator Co.; a division of Watts Water Technologies, Inc.

2. Description:

a. Standard: MSS SP-67, Type I.
b. CWP Rating: 200 psig (1380 kPa).
c. Body Design: Lug type; suitable for bidirectional dead-end service at rated pressure without use of downstream flange.
d. Body Material: ASTM A 126, cast iron or ASTM A 536, ductile iron.
e. Seat: EPDM.
f. Stem: One- or two-piece stainless steel.
g. Disc: Aluminum bronze.

B. 200 CWP, Iron, Single-Flange Butterfly Valves with NBR Seat and Aluminum-Bronze Disc:

1. Manufacturers: Subject to compliance with requirements, available manufacturers offering products that may be incorporated into the Work include, but are not limited to, the following:

a. ABZ Valve and Controls; a division of ABZ Manufacturing, Inc.
b. Conbraco Industries, Inc.; Apollo Valves.
c. Cooper Cameron Valves; a division of Cooper Cameron Corporation.
d. Crane Co.; Crane Valve Group; Jenkins Valves.

e. Crane Co.; Crane Valve Group; Stockham Division.
f. DeZurik Water Controls.
g. Flo Fab Inc.
h. Hammond Valve.
i. Kitz Corporation.
j. Legend Valve.
k. Milwaukee Valve Company.
l. NIBCO INC.
m. Norriseal; a Dover Corporation company.
n. Red-White Valve Corporation.
o. Spence Strainers International; a division of CIRCOR International, Inc.
p. Watts Regulator Co.; a division of Watts Water Technologies, Inc.

2. Description:

a. Standard: MSS SP-67, Type I.
b. CWP Rating: 200 psig (1380 kPa).
c. Body Design: Lug type; suitable for bidirectional dead-end service at rated pressure without use of downstream flange.
d. Body Material: ASTM A 126, cast iron or ASTM A 536, ductile iron.
e. Seat: NBR.
f. Stem: One- or two-piece stainless steel.
g. Disc: Aluminum bronze.

C. 200 CWP, Iron, Single-Flange Butterfly Valves with EPDM Seat and Ductile-Iron Disc:

1. Manufacturers: Subject to compliance with requirements, available manufacturers offering products that may be incorporated into the Work include, but are not limited to, the following:

a. ABZ Valve and Controls; a division of ABZ Manufacturing, Inc.
b. American Valve, Inc.
c. Conbraco Industries, Inc.; Apollo Valves.
d. Cooper Cameron Valves; a division of Cooper Cameron Corporation.
e. Crane Co.; Crane Valve Group; Center Line.
f. Crane Co.; Crane Valve Group; Stockham Division.
g. DeZurik Water Controls.
h. Flo Fab Inc.
i. Hammond Valve.
j. Kitz Corporation.
k. Legend Valve.
l. Milwaukee Valve Company.
m. Mueller Steam Specialty; a division of SPX Corporation.
n. NIBCO INC.
o. Norriseal; a Dover Corporation company.
p. Spence Strainers International; a division of CIRCOR International, Inc.
q. Sure Flow Equipment Inc.
r. Watts Regulator Co.; a division of Watts Water Technologies, Inc.

2. Description:

a. Standard: MSS SP-67, Type I.
b. CWP Rating: 200 psig (1380 kPa).
c. Body Design: Lug type; suitable for bidirectional dead-end service at rated pressure without use of downstream flange.
d. Body Material: ASTM A 126, cast iron or ASTM A 536, ductile iron.
e. Seat: EPDM.
f. Stem: One- or two-piece stainless steel.
g. Disc: Nickel-plated or -coated ductile iron.

D. 200 CWP, Iron, Single-Flange Butterfly Valves with NBR Seat and Ductile-Iron Disc:

1. Manufacturers: Subject to compliance with requirements, available manufacturers offering products that may be incorporated into the Work include, but are not limited to, the following:

a. ABZ Valve and Controls; a division of ABZ Manufacturing, Inc.
b. American Valve, Inc.
c. Conbraco Industries, Inc.; Apollo Valves.
d. Cooper Cameron Valves; a division of Cooper Cameron Corporation.
e. Crane Co.; Crane Valve Group; Center Line.
f. Crane Co.; Crane Valve Group; Stockham Division.
g. DeZurik Water Controls.
h. Flo Fab Inc.
i. Hammond Valve.
j. Kitz Corporation.
k. Legend Valve.
l. Milwaukee Valve Company.
m. Mueller Steam Specialty; a division of SPX Corporation.
n. NIBCO INC.
o. Norriseal; a Dover Corporation company.
p. Spence Strainers International; a division of CIRCOR International, Inc.
q. Sure Flow Equipment Inc.
r. Watts Regulator Co.; a division of Watts Water Technologies, Inc.

2. Description:

a. Standard: MSS SP-67, Type I.
b. CWP Rating: 200 psig (1380 kPa).
c. Body Design: Lug type; suitable for bidirectional dead-end service at rated pressure without use of downstream flange.
d. Body Material: ASTM A 126, cast iron or ASTM A 536, ductile iron.
e. Seat: NBR.
f. Stem: One- or two-piece stainless steel.
g. Disc: Nickel-plated or -coated ductile iron.

2.4 BRONZE SWING CHECK VALVES

A. Class 125, Bronze Swing Check Valves with Bronze Disc:

1. Manufacturers: Subject to compliance with requirements, available manufacturers offering products that may be incorporated into the Work include, but are not limited to, the following:

    a. American Valve, Inc.
    b. Crane Co.; Crane Valve Group; Crane Valves.
    c. Crane Co.; Crane Valve Group; Jenkins Valves.
    d. Crane Co.; Crane Valve Group; Stockham Division.
    e. Hammond Valve.
    f. Kitz Corporation.
    g. Milwaukee Valve Company.
    h. NIBCO INC.
    i. Powell Valves.
    j. Red-White Valve Corporation.
    k. Watts Regulator Co.; a division of Watts Water Technologies, Inc.
    l. Zy-Tech Global Industries, Inc.

2. Description:

    a. Standard: MSS SP-80, Type 3.
    b. CWP Rating: 200 psig (1380 kPa).
    c. Body Design: Horizontal flow.
    d. Body Material: ASTM B 62, bronze.
    e. Ends: Threaded.
    f. Disc: Bronze.

B. Class 125, Bronze Swing Check Valves with Nonmetallic Disc:

1. Manufacturers: Subject to compliance with requirements, available manufacturers offering products that may be incorporated into the Work include, but are not limited to, the following:

    a. Crane Co.; Crane Valve Group; Crane Valves.
    b. Crane Co.; Crane Valve Group; Jenkins Valves.
    c. Crane Co.; Crane Valve Group; Stockham Division.
    d. Hammond Valve.
    e. Kitz Corporation.
    f. Milwaukee Valve Company.
    g. NIBCO INC.
    h. Red-White Valve Corporation.
    i. Watts Regulator Co.; a division of Watts Water Technologies, Inc.

2. Description:

    a. Standard: MSS SP-80, Type 4.
    b. CWP Rating: 200 psig (1380 kPa).
    c. Body Design: Horizontal flow.
    d. Body Material: ASTM B 62, bronze.
    e. Ends: Threaded.
    f. Disc: PTFE or TFE.

2.5 IRON SWING CHECK VALVES

A. Class 125, Iron Swing Check Valves with Metal Seats:

1. Manufacturers: Subject to compliance with requirements, available manufacturers offering products that may be incorporated into the Work include, but are not limited to, the following:

   a. Crane Co.; Crane Valve Group; Crane Valves.
   b. Crane Co.; Crane Valve Group; Jenkins Valves.
   c. Crane Co.; Crane Valve Group; Stockham Division.
   d. Hammond Valve.
   e. Kitz Corporation.
   f. Legend Valve.
   g. Milwaukee Valve Company.
   h. NIBCO INC.
   i. Powell Valves.
   j. Red-White Valve Corporation.
   k. Sure Flow Equipment Inc.
   l. Watts Regulator Co.; a division of Watts Water Technologies, Inc.
   m. Zy-Tech Global Industries, Inc.

2. Description:

   a. Standard: MSS SP-71, Type I.
   b. CWP Rating: 200 psig (1380 kPa).
   c. Body Design: Clear or full waterway.
   d. Body Material: ASTM A 126, gray iron with bolted bonnet.
   e. Ends: Flanged.
   f. Trim: Bronze.
   g. Gasket: Asbestos free.

B. Class 125, Iron Swing Check Valves with Nonmetallic-to-Metal Seats:

1. Manufacturers: Subject to compliance with requirements, available manufacturers offering products that may be incorporated into the Work include, but are not limited to, the following:

   a. Crane Co.; Crane Valve Group; Crane Valves.
   b. Crane Co.; Crane Valve Group; Stockham Division.

2. Description:

   a. Standard: MSS SP-71, Type I.
   b. CWP Rating: 200 psig (1380 kPa).
   c. Body Design: Clear or full waterway.
   d. Body Material: ASTM A 126, gray iron with bolted bonnet.
   e. Ends: Flanged.
   f. Trim: Composition.
   g. Seat Ring: Bronze.
   h. Disc Holder: Bronze.

i. Disc: PTFE or TFE.
j. Gasket: Asbestos free.

2.6 IRON SWING CHECK VALVES WITH CLOSURE CONTROL

A. Class 125, Iron Swing Check Valves with Lever- and Spring-Closure Control:

1. Manufacturers: Subject to compliance with requirements, available manufacturers offering products that may be incorporated into the Work include, but are not limited to, the following:

   a. NIBCO INC.

2. Description:

   a. Standard: MSS SP-71, Type I.
   b. CWP Rating: 200 psig (1380 kPa).
   c. Body Design: Clear or full waterway.
   d. Body Material: ASTM A 126, gray iron with bolted bonnet.
   e. Ends: Flanged.
   f. Trim: Bronze.
   g. Gasket: Asbestos free.
   h. Closure Control: Factory-installed, exterior lever and spring.

B. Class 125, Iron Swing Check Valves with Lever- and Weight-Closure Control:

1. Manufacturers: Subject to compliance with requirements, available manufacturers offering products that may be incorporated into the Work include, but are not limited to, the following:

   a. Crane Co.; Crane Valve Group; Crane Valves.
   b. Crane Co.; Crane Valve Group; Jenkins Valves.
   c. Crane Co.; Crane Valve Group; Stockham Division.
   d. Hammond Valve.
   e. Milwaukee Valve Company.
   f. NIBCO INC.
   g. Watts Regulator Co.; a division of Watts Water Technologies, Inc.

2. Description:

   a. Standard: MSS SP-71, Type I.
   b. CWP Rating: 200 psig (1380 kPa).
   c. Body Design: Clear or full waterway.
   d. Body Material: ASTM A 126, gray iron with bolted bonnet.
   e. Ends: Flanged.
   f. Trim: Bronze.
   g. Gasket: Asbestos free.
   h. Closure Control: Factory-installed, exterior lever and weight.

2.7 BRONZE GATE VALVES

A. Class 125, NRS Bronze Gate Valves:

1. Manufacturers: Subject to compliance with requirements, available manufacturers offering products that may be incorporated into the Work include, but are not limited to, the following:

   a. American Valve, Inc.
   b. Crane Co.; Crane Valve Group; Crane Valves.
   c. Crane Co.; Crane Valve Group; Jenkins Valves.
   d. Crane Co.; Crane Valve Group; Stockham Division.
   e. Hammond Valve.
   f. Kitz Corporation.
   g. Milwaukee Valve Company.
   h. NIBCO INC.
   i. Powell Valves.
   j. Red-White Valve Corporation.
   k. Watts Regulator Co.; a division of Watts Water Technologies, Inc.
   l. Zy-Tech Global Industries, Inc.
   m. Insert manufacturer's name.

2. Description:

   a. Standard: MSS SP-80, Type 1.
   b. CWP Rating: 200 psig (1380 kPa).
   c. Body Material: ASTM B 62, bronze with integral seat and screw-in bonnet.
   d. Ends: Threaded or solder joint.
   e. Stem: Bronze.
   f. Disc: Solid wedge; bronze.
   g. Packing: Asbestos free.
   h. Handwheel: Malleable iron, bronze, or aluminum.

B. Class 125, RS Bronze Gate Valves:

1. Manufacturers: Subject to compliance with requirements, available manufacturers offering products that may be incorporated into the Work include, but are not limited to, the following:

   a. American Valve, Inc.
   b. Crane Co.; Crane Valve Group; Crane Valves.
   c. Crane Co.; Crane Valve Group; Jenkins Valves.
   d. Crane Co.; Crane Valve Group; Stockham Division.
   e. Hammond Valve.
   f. Kitz Corporation.
   g. Milwaukee Valve Company.
   h. NIBCO INC.
   i. Powell Valves.
   j. Watts Regulator Co.; a division of Watts Water Technologies, Inc.
   k. Zy-Tech Global Industries, Inc.

2. Description:

a. Standard: MSS SP-80, Type 2.
b. CWP Rating: 200 psig (1380 kPa).
c. Body Material: ASTM B 62, bronze with integral seat and screw-in bonnet.
d. Ends: Threaded or solder joint.
e. Stem: Bronze.
f. Disc: Solid wedge; bronze.
g. Packing: Asbestos free.
h. Handwheel: Malleable iron, bronze, or aluminum.

2.8 IRON GATE VALVES

A. Class 125, NRS, Iron Gate Valves:

1. Manufacturers: Subject to compliance with requirements, available manufacturers offering products that may be incorporated into the Work include, but are not limited to, the following:

a. Crane Co.; Crane Valve Group; Crane Valves.
b. Crane Co.; Crane Valve Group; Jenkins Valves.
c. Crane Co.; Crane Valve Group; Stockham Division.
d. Flo Fab Inc.
e. Hammond Valve.
f. Kitz Corporation.
g. Legend Valve.
h. Milwaukee Valve Company.
i. NIBCO INC.
j. Powell Valves.
k. Red-White Valve Corporation.
l. Watts Regulator Co.; a division of Watts Water Technologies, Inc.
m. Zy-Tech Global Industries, Inc.

2. Description:

a. Standard: MSS SP-70, Type I.
b. CWP Rating: 200 psig (1380 kPa).
c. Body Material: ASTM A 126, gray iron with bolted bonnet.
d. Ends: Flanged.
e. Trim: Bronze.
f. Disc: Solid wedge.
g. Packing and Gasket: Asbestos free.

2.9 BRONZE GLOBE VALVES

A. Class 125, Bronze Globe Valves with Bronze Disc:

1. Manufacturers: Subject to compliance with requirements, available manufacturers offering products that may be incorporated into the Work include, but are not limited to, the following:

    a. Crane Co.; Crane Valve Group; Crane Valves.
    b. Crane Co.; Crane Valve Group; Stockham Division.
    c. Hammond Valve.
    d. Kitz Corporation.
    e. Milwaukee Valve Company.
    f. NIBCO INC.
    g. Powell Valves.
    h. Red-White Valve Corporation.
    i. Watts Regulator Co.; a division of Watts Water Technologies, Inc.
    j. Zy-Tech Global Industries, Inc.

2. Description:

    a. Standard: MSS SP-80, Type 1.
    b. CWP Rating: 200 psig (1380 kPa).
    c. Body Material: ASTM B 62, bronze with integral seat and screw-in bonnet.
    d. Ends: Threaded or solder joint.
    e. Stem and Disc: Bronze.
    f. Packing: Asbestos free.
    g. Handwheel: Malleable iron, bronze, or aluminum.

B. Class 125, Bronze Globe Valves with Nonmetallic Disc:

1. Manufacturers: Subject to compliance with requirements, available manufacturers offering products that may be incorporated into the Work include, but are not limited to, the following:

    a. Crane Co.; Crane Valve Group; Crane Valves.
    b. Crane Co.; Crane Valve Group; Stockham Division.
    c. NIBCO INC.
    d. Red-White Valve Corporation.

2. Description:

    a. Standard: MSS SP-80, Type 2.
    b. CWP Rating: 200 psig (1380 kPa).
    c. Body Material: ASTM B 62, bronze with integral seat and screw-in bonnet.
    d. Ends: Threaded or solder joint.
    e. Stem: Bronze.
    f. Disc: PTFE or TFE.
    g. Packing: Asbestos free.
    h. Handwheel: Malleable iron, bronze, or aluminum.

2.10 IRON GLOBE VALVES

A. Class 125, Iron Globe Valves:

1. Manufacturers: Subject to compliance with requirements, available manufacturers offering products that may be incorporated into the Work include, but are not limited to, the following:

    a. Crane Co.; Crane Valve Group; Crane Valves.
    b. Crane Co.; Crane Valve Group; Jenkins Valves.
    c. Crane Co.; Crane Valve Group; Stockham Division.
    d. Hammond Valve.
    e. Kitz Corporation.
    f. Milwaukee Valve Company.
    g. NIBCO INC.
    h. Powell Valves.
    i. Red-White Valve Corporation.
    j. Watts Regulator Co.; a division of Watts Water Technologies, Inc.
    k. Zy-Tech Global Industries, Inc.

2. Description:

    a. Standard: MSS SP-85, Type I.
    b. CWP Rating: 200 psig (1380 kPa).
    c. Body Material: ASTM A 126, gray iron with bolted bonnet.
    d. Ends: Flanged.
    e. Trim: Bronze.
    f. Packing and Gasket: Asbestos free.

2.11 CHAINWHEELS

A. Description: Valve actuation assembly with sprocket rim, brackets, and chain.

1. Brackets: Type, number, size, and fasteners required to mount actuator on valve.
2. Attachment: For connection to butterfly valve stems.
3. Sprocket Rim with Chain Guides: Ductile iron, of type and size required for valve.
4. Chain: Hot-dip, galvanized steel, of size required to fit sprocket rim.

2.12 SPECIALTY VALVES

A. Comply with requirements in Division 22 Section "General-Duty Valves for Plumbing Piping" for general-duty metal valves.

B. Comply with requirements in Division 22 Section "Domestic Water Piping Specialties" for balancing valves, drain valves, backflow preventers, and vacuum breakers.

C. CPVC Union Ball Valves:

1. Description:

    a. Standard: MSS SP-122.
    b. Pressure Rating: 100 psig at 180 deg F.
    c. Body Material: CPVC.

d. Body Design: Union type.
e. End Connections for Valves NPS 2 (DN 50) and Smaller: Detachable, socket.
f. End Connections for Valves NPS 2-1/2 to NPS 4 (DN 65 to DN 100): Detachable, socket or Flanged.
g. Ball: CPVC; full port.
h. Seals: PTFE or EPDM-rubber O-rings.
i. Handle: Tee shaped.

D. PVC Union Ball Valves:

1. Description:

a. Standard: MSS SP-122.
b. Pressure Rating: 150 psig (1035 kPa) at 73 deg F (23 deg C).
c. Body Material: PVC.
d. Body Design: Union type.
e. End Connections for Valves NPS 2 (DN 50) and Smaller: Detachable, socket.
f. End Connections for Valves NPS 2-1/2 to NPS 4 (DN 65 to DN 100): Detachable, socket or Flanged.
g. Ball: PVC; full port.
h. Seals: PTFE or EPDM-rubber O-rings.
i. Handle: Tee shaped.

E. PVC Butterfly Valves:

1. Description:

a. Pressure Rating: 150 psig (1035 kPa) at 73 deg F (23 deg C).
b. Body Material: PVC.
c. Body Design: Lug or wafer type.
d. Seat: EPDM rubber.
e. Seals: PTFE or EPDM-rubber O-rings.
f. Disc: PVC.
g. Stem: Stainless steel.
h. Handle: Lever.

F. CPVC Ball Check Valves:

1. Description:

a. Pressure Rating: 100 psig at 180 deg F.
b. Body Material: CPVC.
c. Body Design: Union-type ball check.
d. End Connections for Valves NPS 2 (DN 50) and Smaller: Detachable, socket.
e. End Connections for Valves NPS 2-1/2 to NPS 4 (DN 65 to DN 100): Detachable, socket or Flanged.
f. Ball: CPVC.
g. Seals: EPDM- or FKM-rubber O-rings.

G. PVC Ball Check Valves:

1. Description:

a. Pressure Rating: 150 psig (1035 kPa) at 73 deg F (23 deg C).
b. Body Material: PVC.
c. Body Design: Union-type ball check.
d. End Connections for Valves NPS 2 (DN 50) and Smaller: Detachable, socket.
e. End Connections for Valves NPS 2-1/2 to NPS 4 (DN 65 to DN 100): Detachable, socket or Flanged.
f. Ball: PVC.
g. Seals: EPDM- or FKM-rubber O-rings.

H. CPVC Gate Valves:

1. Description:

a. Pressure Rating: 100 psig at 180 deg F.
b. Body Material: CPVC.
c. Body Design: Nonrising stem.
d. End Connections for Valves NPS 2 (DN 50) and Smaller: Socket.
e. End Connections for Valves NPS 2-1/2 to NPS 4 (DN 65 to DN 100): Socket or Flanged.
f. Gate and Stem: Plastic.
g. Seals: EPDM rubber.
h. Handle: Wheel.

I. PVC Gate Valves:

1. Description:

a. Pressure Rating: 150 psig (1035 kPa) at 73 deg F (23 deg C).
b. Body Material: PVC.
c. Body Design: Nonrising stem.
d. End Connections for Valves NPS 2 (DN 50) and Smaller: Socket.
e. End Connections for Valves NPS 2-1/2 to NPS 4 (DN 65 to DN 100): Socket or Flanged.
f. Gate and Stem: Plastic.
g. Seals: EPDM rubber.
h. Handle: Wheel.

PART 3 - EXECUTION

3.1 VALVE INSTALLATION

A. Install valves with unions or flanges at each piece of equipment arranged to allow service, maintenance, and equipment removal without system shutdown.

B. Locate valves for easy access and provide separate support where necessary.

C. Install valves in horizontal piping with stem at or above center of pipe.

D. Install valves in position to allow full stem movement.

E. Install chainwheels on operators for butterfly, gate, and globe valves NPS 4 (DN 100) and larger and more than 96 inches (2400 mm) above floor. Extend chains to 60 inches (1520 mm) above finished floor.

1. Install swing check valves for proper direction of flow and in horizontal position with hinge pin level.

3.2 ADJUSTING

A. Adjust or replace valve packing after piping systems have been tested and put into service but before final adjusting and balancing. Replace valves if persistent leaking occurs.

3.3 GENERAL REQUIREMENTS FOR VALVE APPLICATIONS

A. If valve applications are not indicated, use the following:

1. Shutoff Service: Ball, butterfly, or gate valves.
2. Throttling Service: Globe, ball, or butterfly valves.
3. Pump-Discharge Check Valves:

a. NPS 2 (DN 50) and Smaller: Bronze swing check valves with bronze or nonmetallic disc.
b. NPS 2-1/2 (DN 65) and Larger for Domestic Water: Iron swing check valves with lever and weight or with spring.
c. NPS 2-1/2 (DN 65) and Larger for Sanitary Waste and Storm Drainage: Iron swing check valves with lever and weight or spring.

B. If valves with specified SWP classes or CWP ratings are not available, the same types of valves with higher SWP class or CWP ratings may be substituted.

C. Select valves, except wafer types, with the following end connections:

1. For Copper Tubing, NPS 2 (DN 50) and Smaller: Threaded ends except where solder-joint valve-end option is indicated in valve schedules below.
2. For Copper Tubing, NPS 2-1/2 to NPS 4 (DN 65 to DN 100): Flanged ends except where threaded valve-end option is indicated in valve schedules below.
3. For Copper Tubing, NPS 5 (DN 125) and Larger: Flanged ends.
4. For Steel Piping, NPS 2 (DN 50) and Smaller: Threaded ends.
5. For Steel Piping, NPS 2-1/2 to NPS 4 (DN 65 to DN 100): Flanged ends except where threaded valve-end option is indicated in valve schedules below.
6. For Steel Piping, NPS 5 (DN 125) and Larger: Flanged ends.

3.4 DOMESTIC, HOT- AND COLD-WATER VALVE SCHEDULE

A. Pipe NPS 2 (DN 50) and Smaller:

1. Bronze Valves: May be provided with solder-joint ends instead of threaded ends.

2. Bronze Angle Valves: Class 125, bronze or nonmetallic disc.
3. Ball Valves: One or two piece, full port, bronze with bronze trim.
4. Bronze Swing Check Valves: Class 125, bronze or nonmetallic disc.
5. Bronze Gate Valves: Class 125, NRS for un-insulated pipe, RS for insulated pipe.
6. Bronze Globe Valves: Class 125, bronze or nonmetallic disc.

B. Pipe NPS 2-1/2 (DN 65) and Larger:

1. Iron Valves, NPS 2-1/2 to NPS 4 (DN 65 to NPS 100): May be provided with threaded ends instead of flanged ends.
2. Iron, Single-Flange Butterfly Valves: 200 CWP, EPDM or NBR seat, aluminum-bronze or ductile-iron disc.
3. Iron Swing Check Valves: Class 125, metal or nonmetallic-to-metal seats.
4. Iron Swing Check Valves with Closure Control: Class 125, lever and spring or weight.
5. Iron Gate Valves: Class 125, NRS.
6. Iron Globe Valves: Class 125.

C. CPVC and PVC valve matching piping materials may be used.

3.5 SANITARY-WASTE AND STORM-DRAINAGE VALVE SCHEDULE

A. Pipe NPS 2 (DN 50) and Smaller:

1. Bronze Valves: May be provided with solder-joint ends instead of threaded ends.
2. Ball Valves: One or two piece, full port, bronze with bronze trim.
3. Bronze Swing Check Valves: Class 125, bronze or nonmetallic disc.
4. Bronze Gate Valves: Class 125, NRS or RS.
5. Bronze Globe Valves: Class 125, bronze or nonmetallic disc.

B. Pipe NPS 2-1/2 (DN 65) and Larger:

1. Iron Valves, NPS 2-1/2 to NPS 4 (DN 65 to NPS 100): May be provided with threaded ends instead of flanged ends.
2. Iron Swing Check Valves: Class 125, metal or nonmetallic-to-metal seats.
3. Iron Swing Check Valves with Closure Control: Class 125, lever and spring or weight.
4. Iron Gate Valves: Class 125, NRS.
5. Iron Globe Valves: Class 125.

C. CPVC and PVC valve matching piping materials may be used.

END OF SECTION 220523

SECTION 220529 - HANGERS AND SUPPORTS FOR PLUMBING PIPING AND EQUIPMENT

PART 1 - GENERAL

1.1 SUMMARY

A. This Section includes the following:

1. Steel pipe hangers and supports.
2. Trapeze pipe hangers.
3. Metal framing systems.
4. Thermal-hanger shield inserts.
5. Fastener systems.
6. Equipment supports.

1.2 DEFINITIONS

A. Terminology: As defined in MSS SP-90, "Guidelines on Terminology for Pipe Hangers and Supports."

1.3 PERFORMANCE REQUIREMENTS

A. Design supports for multiple pipes capable of supporting combined weight of supported systems, system contents, and test water.

B. Design equipment supports capable of supporting combined operating weight of supported equipment and connected systems and components.

C. Design seismic-restraint hangers and supports for piping and equipment and obtain approval from authorities having jurisdiction.

1.4 QUALITY ASSURANCE

A. Welding: Qualify procedures and personnel according to ASME Boiler and Pressure Vessel Code: Section IX.

PART 2 - PRODUCTS

2.1 MANUFACTURERS

A. In other Part 2 articles where titles below introduce lists, the following requirements apply to product selection:

1. Available Manufacturers: Subject to compliance with requirements, manufacturers offering products that may be incorporated into the Work include, but are not limited to, manufacturers specified.
2. Manufacturers: Subject to compliance with requirements, provide products by one of the manufacturers specified.

2.2 STEEL PIPE HANGERS AND SUPPORTS

A. Description: MSS SP-58, Types 1 through 58, factory-fabricated components. Refer to Part 3 "Hanger and Support Applications" Article for where to use specific hanger and support types.

B. Available Manufacturers:

1. AAA Technology & Specialties Co., Inc.
2. Bergen-Power Pipe Supports.
3. B-Line Systems, Inc.; a division of Cooper Industries.
4. Carpenter & Paterson, Inc.
5. Empire Industries, Inc.
6. ERICO/Michigan Hanger Co.
7. Globe Pipe Hanger Products, Inc.
8. Grinnell Corp.
9. GS Metals Corp.
10. National Pipe Hanger Corporation.
11. PHD Manufacturing, Inc.
12. PHS Industries, Inc.
13. Piping Technology & Products, Inc.
14. Tolco Inc.

C. Galvanized, Metallic Coatings: Pregalvanized or hot dipped.

D. Nonmetallic Coatings: Plastic coating, jacket, or liner.

E. Padded Hangers: Hanger with fiberglass or other pipe insulation pad or cushion for support of bearing surface of piping.

2.3 TRAPEZE PIPE HANGERS

A. Description: MSS SP-69, Type 59, shop- or field-fabricated pipe-support assembly made from structural-steel shapes with MSS SP-58 hanger rods, nuts, saddles, and U-bolts.

2.4 METAL FRAMING SYSTEMS

A. Description: MFMA-3, shop- or field-fabricated pipe-support assembly made of steel channels and other components.

B. Available Manufacturers:

1. B-Line Systems, Inc.; a division of Cooper Industries.
2. ERICO/Michigan Hanger Co.; ERISTRUT Div.

3. GS Metals Corp.
4. Power-Strut Div.; Tyco International, Ltd.
5. Thomas & Betts Corporation.
6. Tolco Inc.
7. Unistrut Corp.; Tyco International, Ltd.

C. Coatings: Manufacturer's standard finish, unless bare metal surfaces are indicated.

D. Nonmetallic Coatings: Plastic coating, jacket, or liner.

2.5 THERMAL-HANGER SHIELD INSERTS

A. Description: 100-psig- (690-kPa-) minimum, compressive-strength insulation insert encased in sheet metal shield.

B. Available Manufacturers:

1. Carpenter & Paterson, Inc.
2. ERICO/Michigan Hanger Co.
3. PHS Industries, Inc.
4. Pipe Shields, Inc.
5. Rilco Manufacturing Company, Inc.
6. Value Engineered Products, Inc.

C. Insulation-Insert Material for Hot and Cold Piping: Shall match material specified for the given service of the piping and shall include a vapor barrier.

D. For Trapeze or Clamped Systems: Insert and shield shall cover entire circumference of pipe.

E. For Clevis or Band Hangers: Insert and shield shall cover lower 180 degrees of pipe.

F. Insert Length: Extend 2 inches (50 mm) beyond sheet metal shield for piping operating below ambient air temperature.

2.6 FASTENER SYSTEMS

A. Powder-Actuated Fasteners: Threaded-steel stud, for use in hardened portland cement concrete with pull-out, tension, and shear capacities appropriate for supported loads and building materials where used.

1. Available Manufacturers:

a. Hilti, Inc.
b. ITW Ramset/Red Head.
c. Masterset Fastening Systems, Inc.
d. MKT Fastening, LLC.
e. Powers Fasteners.

B. Mechanical-Expansion Anchors: Insert-wedge-type zinc-coated or stainless steel, for use in hardened portland cement concrete with pull-out, tension, and shear capacities appropriate for supported loads and building materials where used.

1. Available Manufacturers:

a. B-Line Systems, Inc.; a division of Cooper Industries.
b. Empire Industries, Inc.
c. Hilti, Inc.
d. ITW Ramset/Red Head.
e. MKT Fastening, LLC.
f. Powers Fasteners.

2.7 PIPE POSITIONING SYSTEMS

A. Description: Engineered positioning system of metal brackets, clips, and straps for positioning piping in pipe spaces; for plumbing fixtures in commercial applications.

1. Available Manufacturers:

a. Hubbard Enterprises / Holdrite
b. Oatey
c. Sioux Chief
~~d. Approved equal~~

2.8 EQUIPMENT SUPPORTS

A. Description: Welded, shop- or field-fabricated equipment support made from structural-steel shapes.

2.9 MISCELLANEOUS MATERIALS

A. Structural Steel: ASTM A 36/A 36M, steel plates, shapes, and bars; black and galvanized.

B. Grout: ASTM C 1107, factory-mixed and -packaged, dry, hydraulic-cement, nonshrink and nonmetallic grout; suitable for interior and exterior applications.

1. Properties: Nonstaining, noncorrosive, and nongaseous.
2. Design Mix: 5000-psi (34.5-MPa), 28-day compressive strength.

PART 3 - EXECUTION

3.1 HANGER AND SUPPORT APPLICATIONS

A. Specific hanger and support requirements are specified in Sections specifying piping systems and equipment.

B. Comply with MSS SP-69 for pipe hanger selections and applications that are not specified in piping system Sections.

C. Use hangers and supports with galvanized, metallic coatings for piping and equipment that will not have field-applied finish.

D. Use nonmetallic coatings on attachments for electrolytic protection where attachments are in direct contact with copper tubing.

E. Use padded hangers for piping that is subject to scratching.

F. Horizontal-Piping Hangers and Supports: Unless otherwise indicated and except as specified in piping system Sections, install the following types:

1. Adjustable, Steel Clevis Hangers (MSS Type 1): For suspension of noninsulated or insulated stationary pipes, NPS 1/2 to NPS 30 (DN 15 to DN 750).
2. Yoke-Type Pipe Clamps (MSS Type 2): For suspension of 120 to 450 deg F (49 to 232 deg C) pipes, NPS 4 to NPS 16 (DN 100 to DN 400), requiring up to 4 inches (100 mm) of insulation.
3. Carbon- or Alloy-Steel, Double-Bolt Pipe Clamps (MSS Type 3): For suspension of pipes, NPS 3/4 to NPS 24 (DN 20 to DN 600), requiring clamp flexibility and up to 4 inches (100 mm) of insulation.
4. Adjustable, Steel Band Hangers (MSS Type 7): For suspension of noninsulated stationary pipes, NPS 1/2 to NPS 8 (DN 15 to DN 200).
5. U-Bolts (MSS Type 24): For support of heavy pipes, NPS 1/2 to NPS 30 (DN 15 to DN 750).
6. Pipe Saddle Supports (MSS Type 36): For support of pipes, NPS 4 to NPS 36 (DN 100 to DN 900), with steel pipe base stanchion support and cast-iron floor flange.
7. Single Pipe Rolls (MSS Type 41): For suspension of pipes, NPS 1 to NPS 30 (DN 25 to DN 750), from 2 rods if longitudinal movement caused by expansion and contraction might occur.
8. Complete Pipe Rolls (MSS Type 44): For support of pipes, NPS 2 to NPS 42 (DN 50 to DN 1050), if longitudinal movement caused by expansion and contraction might occur but vertical adjustment is not necessary.

G. Vertical-Piping Clamps: Unless otherwise indicated and except as specified in piping system Sections, install the following types:

1. Extension Pipe or Riser Clamps (MSS Type 8): For support of pipe risers, NPS 3/4 to NPS 20 (DN 20 to DN 500).
2. Carbon- or Alloy-Steel Riser Clamps (MSS Type 42): For support of pipe risers, NPS 3/4 to NPS 20 (DN 20 to DN 500), if longer ends are required for riser clamps.

H. Hanger-Rod Attachments: Unless otherwise indicated and except as specified in piping system Sections, install the following types:

1. Steel Turnbuckles (MSS Type 13): For adjustment up to 6 inches (150 mm) for heavy loads.
2. Steel Clevises (MSS Type 14): For 120 to 450 deg F (49 to 232 deg C) piping installations.

I. Building Attachments: Unless otherwise indicated and except as specified in piping system Sections, install the following types:

1. Steel or Malleable Concrete Inserts (MSS Type 18): For upper attachment to suspend pipe hangers from concrete ceiling.
2. Top-Beam C-Clamps (MSS Type 19): For use under roof installations with bar-joist construction to attach to top flange of structural shape.
3. Side-Beam or Channel Clamps (MSS Type 20): For attaching to bottom flange of beams, channels, or angles.
4. Center-Beam Clamps (MSS Type 21): For attaching to center of bottom flange of beams.
5. Welded Beam Attachments (MSS Type 22): For attaching to bottom of beams if loads are considerable and rod sizes are large.
6. C-Clamps (MSS Type 23): For structural shapes.
7. Welded-Steel Brackets: For support of pipes from below, or for suspending from above by using clip and rod. Use one of the following for indicated loads:

    a. Light (MSS Type 31): 750 lb (340 kg).
    b. Medium (MSS Type 32): 1500 lb (680 kg).
    c. Heavy (MSS Type 33): 3000 lb (1360 kg).

8. Side-Beam Brackets (MSS Type 34): For sides of steel or wooden beams.
9. Plate Lugs (MSS Type 57): For attaching to steel beams if flexibility at beam is required.

J. Saddles and Shields: Unless otherwise indicated and except as specified in piping system Sections, install the following types:

1. Steel Pipe-Covering Protection Saddles (MSS Type 39): To fill interior voids with insulation that matches adjoining insulation.
2. Protection Shields (MSS Type 40): Of length recommended in writing by manufacturer to prevent crushing insulation.
3. Thermal-Hanger Shield Inserts: For supporting insulated pipe.

K. Spring Hangers and Supports: Unless otherwise indicated and except as specified in piping system Sections, install the following types:

1. Spring Cushions (MSS Type 48): For light loads if vertical movement does not exceed 1-1/4 inches (32 mm).
2. Spring-Cushion Roll Hangers (MSS Type 49): For equipping Type 41 roll hanger with springs.
3. Variable-Spring Base Supports (MSS Type 52): Preset to indicated load and limit variability factor to 25 percent to absorb expansion and contraction of piping system from base support.

L. Comply with MSS SP-69 for trapeze pipe hanger selections and applications that are not specified in piping system Sections.

M. Comply with MFMA-102 for metal framing system selections and applications that are not specified in piping system Sections.

N. Use powder-actuated fasteners or mechanical-expansion anchors instead of building attachments where required in concrete construction. Contractor shall obtain approval from the Structural Engineer for actual product to be used prior to beginning work.

3.2 HANGER AND SUPPORT INSTALLATION

A. Steel Pipe Hanger Installation: Comply with MSS SP-69 and MSS SP-89. Install hangers, supports, clamps, and attachments as required to properly support piping from building structure.

B. Trapeze Pipe Hanger Installation: Comply with MSS SP-69 and MSS SP-89. Arrange for grouping of parallel runs of horizontal piping and support together on field-fabricated trapeze pipe hangers.

1. Pipes of Various Sizes: Support together and space trapezes for smallest pipe size or install intermediate supports for smaller diameter pipes as specified above for individual pipe hangers.
2. Field fabricate from ASTM A 36/A 36M, steel shapes selected for loads being supported. Weld steel according to AWS D1.1.

C. Metal Framing System Installation: Arrange for grouping of parallel runs of piping and support together on field-assembled metal framing systems.

D. Thermal-Hanger Shield Installation: Install in pipe hanger or shield for insulated piping.

E. Fastener System Installation:

1. Install powder-actuated fasteners in concrete after concrete is placed and completely cured. Use operators that are licensed by powder-actuated tool manufacturer. Install fasteners according to powder-actuated tool manufacturer's operating manual.
2. Install mechanical-expansion anchors in concrete after concrete is placed and completely cured. Install fasteners according to manufacturer's written instructions.

F. Pipe Positioning-System Installation: Install support devices to make rigid supply and waste piping connections to each plumbing fixture. Makeshift, field devised methods shall not be allowed without prior written consent of engineer and/or owner. Use nonmetallic coatings on attachments for electrolytic protection where attachments are in direct contact with copper tubing. Use plenum rated clamps if located within a plenum space.

G. Install hangers and supports complete with necessary inserts, bolts, rods, nuts, washers, and other accessories.

H. Equipment Support Installation: Fabricate from welded-structural-steel shapes.

I. Install hangers and supports to allow controlled thermal and seismic movement of piping systems, to permit freedom of movement between pipe anchors, and to facilitate action of expansion joints, expansion loops, expansion bends, and similar units.

J. Install lateral bracing with pipe hangers and supports to prevent swaying.

K. Install building attachments within concrete slabs or attach to structural steel. Install additional attachments at concentrated loads, including valves, flanges, and strainers, NPS 2-1/2 (DN 65) and larger and at changes in direction of piping. Install concrete inserts before concrete is placed; fasten inserts to forms and install reinforcing bars through openings at top of inserts.

L. Load Distribution: Install hangers and supports so piping live and dead loads and stresses from movement will not be transmitted to connected equipment.

M. Pipe Slopes: Install hangers and supports to provide indicated pipe slopes and so maximum pipe deflections allowed by ASME B31.9 (for building services piping) are not exceeded.

N. Insulated Piping: Comply with the following:

1. Attach clamps and spacers to piping.

    a. Piping Operating above Ambient Air Temperature: Clamp may project through insulation.
    b. Piping Operating below Ambient Air Temperature: Use thermal-hanger shield insert with clamp sized to match OD of insert.
    c. Do not exceed pipe stress limits according to ASME B31.9 for building services piping.

2. Install MSS SP-58, Type 39, protection saddles if insulation without vapor barrier is indicated. Fill interior voids with insulation that matches adjoining insulation.
3. Install MSS SP-58, Type 40, protective shields on cold piping with vapor barrier. Shields shall span an arc of 180 degrees.
4. Shield Dimensions for Pipe: Not less than the following:

    a. NPS 1/4 to NPS 3-1/2 (DN 8 to DN 90): 12 inches (305 mm) long and 0.048 inch (1.22 mm) thick.
    b. NPS 4 (DN 100): 12 inches (305 mm) long and 0.06 inch (1.52 mm) thick.
    c. NPS 5 and NPS 6 (DN 125 and DN 150): 18 inches (457 mm) long and 0.06 inch (1.52 mm) thick.
    d. NPS 8 to NPS 14 (DN 200 to DN 350): 24 inches (610 mm) long and 0.075 inch (1.91 mm) thick.
    e. NPS 16 to NPS 24 (DN 400 to DN 600): 24 inches (610 mm) long and 0.105 inch (2.67 mm) thick.

5. Pipes NPS 8 (DN 200) and Larger: Include wood inserts.
6. Insert Material: Length at least as long as protective shield.
7. Thermal-Hanger Shields: Install with insulation same thickness as piping insulation.

3.3 EQUIPMENT SUPPORTS

A. Fabricate structural-steel stands to suspend equipment from structure overhead or to support equipment above floor.

B. Grouting: Place grout under supports for equipment and make smooth bearing surface.

C. Provide lateral bracing, to prevent swaying, for equipment supports.

3.4 METAL FABRICATIONS

A. Cut, drill, and fit miscellaneous metal fabrications for trapeze pipe hangers and equipment supports.

B. Fit exposed connections together to form hairline joints. Field weld connections that cannot be shop welded because of shipping size limitations.

C. Field Welding: Comply with AWS D1.1 procedures for shielded metal arc welding, appearance and quality of welds, and methods used in correcting welding work, and with the following:

1. Use materials and methods that minimize distortion and develop strength and corrosion resistance of base metals.
2. Obtain fusion without undercut or overlap.
3. Remove welding flux immediately.
4. Finish welds at exposed connections so no roughness shows after finishing and contours of welded surfaces match adjacent contours.

3.5 ADJUSTING

A. Hanger Adjustments: Adjust hangers to distribute loads equally on attachments and to achieve indicated slope of pipe.

3.6 PAINTING

A. Touch Up: Clean field welds and abraded areas of shop paint. Paint exposed areas immediately after erecting hangers and supports. Use same materials as used for shop painting. Comply with SSPC-PA 1 requirements for touching up field-painted surfaces.

1. Apply paint by brush or spray to provide minimum dry film thickness of 2.0 mils (0.05 mm).

B. Galvanized Surfaces: Clean welds, bolted connections, and abraded areas and apply galvanizing-repair paint to comply with ASTM A 780.

END OF SECTION 220529

SECTION 220553 - IDENTIFICATION FOR PLUMBING PIPING AND EQUIPMENT

PART 1 - GENERAL

1.1 SUMMARY

A. Section Includes:

1. Equipment labels.
2. Warning signs and labels.
3. Pipe labels.

1.2 SUBMITTAL

A. Product Data: For each type of product indicated.

PART 2 - PRODUCTS

2.1 EQUIPMENT LABELS

A. Metal Labels for Equipment:

1. Material and Thickness: Stainless steel**,** 0.025-inch (0.64-mm) minimum thickness, and having predrilled or stamped holes for attachment hardware.
2. Minimum Label Size: Length and width vary for required label content, but not less than 2-1/2 by 3/4 inch (64 by 19 mm).
3. Minimum Letter Size: 1/4 inch (6.4 mm) for name of units if viewing distance is less than 24 inches (600 mm), 1/2 inch (13 mm) for viewing distances up to 72 inches (1830 mm), and proportionately larger lettering for greater viewing distances. Include secondary lettering two-thirds to three-fourths the size of principal lettering.
4. Fasteners: Stainless-steel **rivets** or self-tapping screws.
5. Adhesive: Contact-type permanent adhesive, compatible with label and with substrate.

B. Plastic Labels for Equipment:

1. Material and Thickness: Multilayer, multicolor, plastic labels for mechanical engraving, 1/8 inch (3.2 mm) thick, and having predrilled holes for attachment hardware.
2. Letter Color: White.
3. Background Color: Black.
4. Maximum Temperature: Able to withstand temperatures up to 160 deg F (71 deg C).
5. Minimum Label Size: Length and width vary for required label content, but not less than 2-1/2 by 3/4 inch (64 by 19 mm).
6. Minimum Letter Size: 1/4 inch (6.4 mm) for name of units if viewing distance is less than 24 inches (600 mm), 1/2 inch (13 mm) for viewing distances up to 72 inches (1830 mm), and proportionately larger lettering for greater viewing distances. Include secondary lettering two-thirds to three-fourths the size of principal lettering.

7. Fasteners: Stainless-steel rivets or self-tapping screws.
8. Adhesive: Contact-type permanent adhesive, compatible with label and with substrate.

C. Label Content: Include equipment's Drawing designation or unique equipment number, Drawing numbers where equipment is indicated (plans, details, and schedules), plus the Specification Section number and title where equipment is specified.

D. Equipment Label Schedule: For each item of equipment to be labeled, on 8-1/2-by-11-inch (A4) bond paper. Tabulate equipment identification number and identify Drawing numbers where equipment is indicated (plans, details, and schedules), plus the Specification Section number and title where equipment is specified. Equipment schedule shall be included in operation and maintenance data.

2.2 WARNING SIGNS AND LABELS

A. Material and Thickness: Multilayer, multicolor, plastic labels for mechanical engraving, 1/8 inch (3.2 mm) thick, and having predrilled holes for attachment hardware.

B. Letter Color: White.

C. Background Color: Red.

D. Maximum Temperature: Able to withstand temperatures up to 160 deg F (71 deg C).

E. Minimum Label Size: Length and width vary for required label content, but not less than 2-1/2 by 3/4 inch (64 by 19 mm).

F. Minimum Letter Size: 1/4 inch (6.4 mm) for name of units if viewing distance is less than 24 inches (600 mm), 1/2 inch (13 mm) for viewing distances up to 72 inches (1830 mm), and proportionately larger lettering for greater viewing distances. Include secondary lettering two-thirds to three-fourths the size of principal lettering.

G. Fasteners: Stainless-steel rivets or self-tapping screws.

H. Adhesive: Contact-type permanent adhesive, compatible with label and with substrate.

I. Label Content: Include caution and warning information, plus emergency notification instructions.

2.3 PIPE LABELS

A. General Requirements for Manufactured Pipe Labels: Preprinted, color-coded, with lettering indicating service, and showing flow direction.

B. Self-Adhesive Pipe Labels: Printed plastic with contact-type, permanent-adhesive backing.

C. Pipe Label Contents: Include identification of piping service using same designations or abbreviations as used on Drawings, pipe size, and an arrow indicating flow direction.

1. Flow-Direction Arrows: Integral with piping system service lettering to accommodate both directions, or as separate unit on each pipe label to indicate flow direction.
2. Lettering Size: At least 1-1/2 inches (38 mm) high.

PART 3 - EXECUTION

3.1 PREPARATION

A. Clean piping and equipment surfaces of substances that could impair bond of identification devices, including dirt, oil, grease, release agents, and incompatible primers, paints, and encapsulants.

3.2 EQUIPMENT LABEL INSTALLATION

A. Install or permanently fasten labels on each major item of mechanical equipment.

B. Locate equipment labels where accessible and visible.

3.3 PIPE LABEL INSTALLATION

A. Locate pipe labels where piping is exposed or above accessible ceilings in finished spaces; machine rooms; accessible maintenance spaces such as shafts, tunnels, and plenums; and exterior exposed locations as follows:

1. Near each valve and control device.
2. Near each branch connection, excluding short takeoffs for fixtures and terminal units. Where flow pattern is not obvious, mark each pipe at branch.
3. Near penetrations through walls, floors, ceilings, and inaccessible enclosures.
4. At access doors, manholes, and similar access points that permit view of concealed piping.
5. Near major equipment items and other points of origination and termination.
6. Spaced at maximum intervals of 50 feet (15 m) along each run. Reduce intervals to 25 feet (7.6 m) in areas of congested piping and equipment.
7. On piping above removable acoustical ceilings. Omit intermediately spaced labels.

B. Pipe Label Color Schedule:

1. Domestic Cold Water:

   a. Background Color: Blue.
   b. Letter Color: White.

2. Domestic Hot Water:

   a. Background Color: Red.
   b. Letter Color: White.

3. Natural Gas Piping:

a. Background Color: Yellow.
b. Letter Color: Black.

4. Sanitary Waste and Storm Drainage Piping:

a. Background Color: Green.
b. Letter Color: White.

END OF SECTION 220553

SECTION 220700 - PLUMBING INSULATION

PART 1 - GENERAL

1.1 SUMMARY

A. Section Includes:

1. Insulation Materials:
   a. Mineral fiber.
2. Insulating cements.
3. Adhesives.
4. Mastics.
5. Sealants.
6. Factory-applied jackets.
7. Tapes.
8. Corner angles.

B. Related Sections include the following:

1. Division 21 Section "Fire-Suppression Systems Insulation."
2. Division 23 Section "HVAC Insulation."

1.2 SUBMITTALS

A. Product Data: For each type of product indicated.

B. LEED Submittal:

1. Product Data for Credit EQ 4.1: For adhesives and sealants, including printed statement of VOC content.

C. Shop Drawings:

1. Detail application of protective shields, saddles, and inserts at hangers for each type of insulation and hanger.
2. Detail attachment and covering of heat tracing inside insulation.
3. Detail insulation application at pipe expansion joints for each type of insulation.
4. Detail insulation application at elbows, fittings, flanges, valves, and specialties for each type of insulation.
5. Detail removable insulation at piping specialties, equipment connections, and access panels.
6. Detail application of field-applied jackets.
7. Detail application at linkages of control devices.
8. Detail field application for each equipment type.

D. Field quality-control reports.

1.3 QUALITY ASSURANCE

A. Fire-Test-Response Characteristics: Insulation and related materials shall have fire-test-response characteristics indicated, as determined by testing identical products per ASTM E 84, by a testing and inspecting agency acceptable to authorities having jurisdiction. Factory label insulation and jacket materials and adhesive, mastic, tapes, and cement material containers, with appropriate markings of applicable testing and inspecting agency.

1. Insulation Installed Indoors: Flame-spread index of 25 or less, and smoke-developed index of 50 or less.
2. Insulation Installed Outdoors: Flame-spread index of 75 or less, and smoke-developed index of 150 or less.

PART 2 - PRODUCTS

2.1 INSULATION MATERIALS

A. Comply with requirements in Part 3 schedule articles for where insulating materials shall be applied.

B. Products shall not contain asbestos, lead, mercury, or mercury compounds.

C. Products that come in contact with stainless steel shall have a leachable chloride content of less than 50 ppm when tested according to ASTM C 871.

D. Insulation materials for use on austenitic stainless steel shall be qualified as acceptable according to ASTM C 795.

E. Mineral-Fiber, Preformed Pipe Insulation:

1. Products: Subject to compliance with requirements, available products that may be incorporated into the Work include, but are not limited to, the following:

   a. Fibrex Insulations Inc.; Coreplus 1200.
   b. Johns Manville; Micro-Lok.
   c. Knauf Insulation; 1000 Pipe Insulation.
   d. Manson Insulation Inc.; Alley-K.
   e. Owens Corning; Fiberglas Pipe Insulation.

2. Type I, 850 deg F (454 deg C) Materials: Mineral or glass fibers bonded with a thermosetting resin. Comply with ASTM C 547, Type I, Grade A, with factory-applied ASJ. Factory-applied jacket requirements are specified in "Factory-Applied Jackets" Article.

F. Mineral-Fiber, Pipe and Tank Insulation: Mineral or glass fibers bonded with a thermosetting resin. Semirigid board material with factory-applied ASJ complying with ASTM C 1393, Type II or Type IIIA Category 2, or with properties similar to ASTM C 612, Type IB. Nominal density is 2.5 lb/cu. ft. (40 kg/cu. m) or more. Thermal conductivity (k-value) at 100 deg F (55

deg C) is 0.29 Btu x in./h x sq. ft. x deg F (0.042 W/m x K) or less. Factory-applied jacket requirements are specified in "Factory-Applied Jackets" Article.

1. Products: Subject to compliance with requirements, available products that may be incorporated into the Work include, but are not limited to, the following:

   a. CertainTeed Corp.; CrimpWrap.
   b. Johns Manville; MicroFlex.
   c. Knauf Insulation; Pipe and Tank Insulation.
   d. Manson Insulation Inc.; AK Flex.
   e. Owens Corning; Fiberglas Pipe and Tank Insulation.

2.2 INSULATING CEMENTS

A. Mineral-Fiber, Hydraulic-Setting Insulating and Finishing Cement: Comply with ASTM C 449/C 449M.

1. Products: Subject to compliance with requirements, available products that may be incorporated into the Work include, but are not limited to, the following:

   a. Insulco, Division of MFS, Inc.; SmoothKote.
   b. P. K. Insulation Mfg. Co., Inc.; PK No. 127, and Quik-Cote.
   c. Rock Wool Manufacturing Company; Delta One Shot.

2.3 ADHESIVES

A. Materials shall be compatible with insulation materials, jackets, and substrates and for bonding insulation to itself and to surfaces to be insulated, unless otherwise indicated.

B. Mineral-Fiber Adhesive: Comply with MIL-A-3316C, Class 2, Grade A.

1. Products: Subject to compliance with requirements, available products that may be incorporated into the Work include, but are not limited to, the following:

   a. Childers Products, Division of ITW; CP-82.
   b. Foster Products Corporation, H. B. Fuller Company; 85-20.
   c. ITW TACC, Division of Illinois Tool Works; S-90/80.
   d. Marathon Industries, Inc.; 225.
   e. Mon-Eco Industries, Inc.; 22-25.

2. For indoor applications, use adhesive that has a VOC content of 80 g/L or less when calculated according to 40 CFR 59, Subpart D (EPA Method 24).

C. ASJ Adhesive, and FSK and PVDC Jacket Adhesive: Comply with MIL-A-3316C, Class 2, Grade A for bonding insulation jacket lap seams and joints.

1. Products: Subject to compliance with requirements, available products that may be incorporated into the Work include, but are not limited to, the following:

   a. Childers Products, Division of ITW; CP-82.

b. Foster Products Corporation, H. B. Fuller Company; 85-20.
c. ITW TACC, Division of Illinois Tool Works; S-90/80.
d. Marathon Industries, Inc.; 225.
e. Mon-Eco Industries, Inc.; 22-25.

2. For indoor applications, use adhesive that has a VOC content of 50 g/L or less when calculated according to 40 CFR 59, Subpart D (EPA Method 24).

2.4 MASTICS

A. Materials shall be compatible with insulation materials, jackets, and substrates; comply with MIL-C-19565C, Type II.

1. For indoor applications, use mastics that have a VOC content of <**Insert value**> g/L or less when calculated according to 40 CFR 59, Subpart D (EPA Method 24).

B. Vapor-Barrier Mastic: Water based; suitable for indoor and outdoor use on below ambient services.

1. Products: Subject to compliance with requirements, available products that may be incorporated into the Work include, but are not limited to, the following:

a. Childers Products, Division of ITW; CP-35.
b. Foster Products Corporation, H. B. Fuller Company; 30-90.
c. ITW TACC, Division of Illinois Tool Works; CB-50.
d. Marathon Industries, Inc.; 590.
e. Mon-Eco Industries, Inc.; 55-40.
f. Vimasco Corporation; 749.

2. Water-Vapor Permeance: ASTM E 96, Procedure B, 0.013 perm (0.009 metric perm) at 43-mil (1.09-mm) dry film thickness.
3. Service Temperature Range: Minus 20 to plus 180 deg F (Minus 29 to plus 82 deg C).
4. Solids Content: ASTM D 1644, 59 percent by volume and 71 percent by weight.
5. Color: White.

C. Breather Mastic: Water based; suitable for indoor and outdoor use on above ambient services.

1. Products: Subject to compliance with requirements, available products that may be incorporated into the Work include, but are not limited to, the following:

a. Childers Products, Division of ITW; CP-10.
b. Foster Products Corporation, H. B. Fuller Company; 35-00.
c. ITW TACC, Division of Illinois Tool Works; CB-05/15.
d. Marathon Industries, Inc.; 550.
e. Mon-Eco Industries, Inc.; 55-50.
f. Vimasco Corporation; WC-1/WC-5.

2. Water-Vapor Permeance: ASTM F 1249, 3 perms (2 metric perms) at 0.0625-inch (1.6-mm) dry film thickness.
3. Service Temperature Range: Minus 20 to plus 200 deg F (Minus 29 to plus 93 deg C).

4. Solids Content: 63 percent by volume and 73 percent by weight.
5. Color: White.

2.5 SEALANTS

A. ASJ Flashing Sealants, and Vinyl, PVDC, and PVC Jacket Flashing Sealants:

1. Materials shall be compatible with insulation materials, jackets, and substrates.
2. Fire- and water-resistant, flexible, elastomeric sealant.
3. Service Temperature Range: Minus 40 to plus 250 deg F (Minus 40 to plus 121 deg C).
4. Color: White.
5. For indoor applications, use sealants that have a VOC content of 250 g/L or less when calculated according to 40 CFR 59, Subpart D (EPA Method 24).

2.6 FACTORY-APPLIED JACKETS

A. Insulation system schedules indicate factory-applied jackets on various applications. When factory-applied jackets are indicated, comply with the following:

1. ASJ: White, kraft-paper, fiberglass-reinforced scrim with aluminum-foil backing; complying with ASTM C 1136, Type I.
2. ASJ-SSL: ASJ with self-sealing, pressure-sensitive, acrylic-based adhesive covered by a removable protective strip; complying with ASTM C 1136, Type I.
3. FSK Jacket: Aluminum-foil, fiberglass-reinforced scrim with kraft-paper backing; complying with ASTM C 1136, Type II.
4. PVDC Jacket for Indoor Applications: 4-mil- (0.10-mm-) thick, white PVDC biaxially oriented barrier film with a permeance at 0.02 perms (0.013 metric perms) when tested according to ASTM E 96 and with a flame-spread index of 5 and a smoke-developed index of 20 when tested according to ASTM E 84.

5. PVDC Jacket for Outdoor Applications: 6-mil- (0.15-mm-) thick, white PVDC biaxially oriented barrier film with a permeance at 0.01 perms (0.007 metric perms) when tested according to ASTM E 96 and with a flame-spread index of 5 and a smoke-developed index of 25 when tested according to ASTM E 84.

6. PVDC-SSL Jacket: PVDC jacket with a self-sealing, pressure-sensitive, acrylic-based adhesive covered by a removable protective strip.

2.7 TAPES

A. ASJ Tape: White vapor-retarder tape matching factory-applied jacket with acrylic adhesive, complying with ASTM C 1136.

1. Width: 3 inches (75 mm).
2. Thickness: 11.5 mils (0.29 mm).
3. Adhesion: 90 ounces force/inch (1.0 N/mm) in width.
4. Elongation: 2 percent.
5. Tensile Strength: 40 lbf/inch (7.2 N/mm) in width.

6. ASJ Tape Disks and Squares: Precut disks or squares of ASJ tape.

B. FSK Tape: Foil-face, vapor-retarder tape matching factory-applied jacket with acrylic adhesive; complying with ASTM C 1136.

1. Width: 3 inches (75 mm).
2. Thickness: 6.5 mils (0.16 mm).
3. Adhesion: 90 ounces force/inch (1.0 N/mm) in width.
4. Elongation: 2 percent.
5. Tensile Strength: 40 lbf/inch (7.2 N/mm) in width.
6. FSK Tape Disks and Squares: Precut disks or squares of FSK tape.

C. PVDC Tape: White vapor-retarder PVDC tape with acrylic adhesive.

1. Width: 3 inches (75 mm).
2. Adhesive Thickness: 1.5 mils (0.04 mm).
3. Elongation at Break: 145 percent.
4. Tensile Strength: 55 lbf/inch (10.1 N/mm) in width.

2.8 CORNER ANGLES

A. PVC Corner Angles: 30 mils (0.8 mm) thick, minimum 1 by 1 inch (25 by 25 mm), PVC according to ASTM D 1784, Class 16354-C. White or color-coded to match adjacent surface.

B. Aluminum Corner Angles: 0.040 inch (1.0 mm) thick, minimum 1 by 1 inch (25 by 25 mm), aluminum according to ASTM B 209 (ASTM B 209M), Alloy 3003, 3005, 3105 or 5005; Temper H-14.

PART 3 - EXECUTION

3.1 PREPARATION

A. Surface Preparation: Clean and dry surfaces to receive insulation. Remove materials that will adversely affect insulation application.

B. Coordinate insulation installation with the trade installing heat tracing. Comply with requirements for heat tracing that apply to insulation.

C. Mix insulating cements with clean potable water; if insulating cements are to be in contact with stainless-steel surfaces, use demineralized water.

3.2 GENERAL INSTALLATION REQUIREMENTS

A. Install insulation materials, accessories, and finishes with smooth, straight, and even surfaces; free of voids throughout the length of equipment and piping including fittings, valves, and specialties.

B. Install insulation materials, forms, vapor barriers or retarders, jackets, and thicknesses required for each item of equipment and pipe system as specified in insulation system schedules.

C. Install accessories compatible with insulation materials and suitable for the service. Install accessories that do not corrode, soften, or otherwise attack insulation or jacket in either wet or dry state.

D. Install insulation with longitudinal seams at top and bottom of horizontal runs.

E. Install multiple layers of insulation with longitudinal and end seams staggered.

F. Do not weld brackets, clips, or other attachment devices to piping, fittings, and specialties.

G. Keep insulation materials dry during application and finishing.

H. Install insulation with tight longitudinal seams and end joints. Bond seams and joints with adhesive recommended by insulation material manufacturer.

I. Install insulation with least number of joints practical.

J. Where vapor barrier is indicated, seal joints, seams, and penetrations in insulation at hangers, supports, anchors, and other projections with vapor-barrier mastic.

1. Install insulation continuously through hangers and around anchor attachments.
2. For insulation application where vapor barriers are indicated, extend insulation on anchor legs from point of attachment to supported item to point of attachment to structure. Taper and seal ends at attachment to structure with vapor-barrier mastic.
3. Install insert materials and install insulation to tightly join the insert. Seal insulation to insulation inserts with adhesive or sealing compound recommended by insulation material manufacturer.
4. Cover inserts with jacket material matching adjacent pipe insulation. Install shields over jacket, arranged to protect jacket from tear or puncture by hanger, support, and shield.

K. Apply adhesives, mastics, and sealants at manufacturer's recommended coverage rate and wet and dry film thicknesses.

L. Install insulation with factory-applied jackets as follows:

1. Draw jacket tight and smooth.
2. Cover circumferential joints with 3-inch- (75-mm-) wide strips, of same material as insulation jacket. Secure strips with adhesive and outward clinching staples along both edges of strip, spaced 4 inches (100 mm) o.c.
3. Overlap jacket longitudinal seams at least 1-1/2 inches (38 mm). Install insulation with longitudinal seams at bottom of pipe. Clean and dry surface to receive self-sealing lap.
4. Cover joints and seams with tape as recommended by insulation material manufacturer to maintain vapor seal.
5. Where vapor barriers are indicated, apply vapor-barrier mastic on seams and joints and at ends adjacent to pipe flanges and fittings.

M. Cut insulation in a manner to avoid compressing insulation more than 75 percent of its nominal thickness.

N. Finish installation with systems at operating conditions. Repair joint separations and cracking due to thermal movement.

O. Repair damaged insulation facings by applying same facing material over damaged areas. Extend patches at least 4 inches (100 mm) beyond damaged areas. Adhere, staple, and seal patches similar to butt joints.

P. For above ambient services, do not install insulation to the following:

1. Vibration-control devices.
2. Testing agency labels and stamps.
3. Nameplates and data plates.
4. Manholes.
5. Handholes.
6. Cleanouts.

3.3 PENETRATIONS

A. Insulation Installation at Roof Penetrations: Install insulation continuously through roof penetrations.

1. Seal penetrations with flashing sealant.
2. For applications requiring only indoor insulation, terminate insulation above roof surface and seal with joint sealant. For applications requiring indoor and outdoor insulation, install insulation for outdoor applications tightly joined to indoor insulation ends. Seal joint with joint sealant.
3. Extend jacket of outdoor insulation outside roof flashing at least 2 inches (50 mm) below top of roof flashing.
4. Seal jacket to roof flashing with flashing sealant.

B. Insulation Installation at Underground Exterior Wall Penetrations: Terminate insulation flush with sleeve seal. Seal terminations with flashing sealant.

C. Insulation Installation at Aboveground Exterior Wall Penetrations: Install insulation continuously through wall penetrations.

1. Seal penetrations with flashing sealant.
2. For applications requiring only indoor insulation, terminate insulation inside wall surface and seal with joint sealant. For applications requiring indoor and outdoor insulation, install insulation for outdoor applications tightly joined to indoor insulation ends. Seal joint with joint sealant.
3. Extend jacket of outdoor insulation outside wall flashing and overlap wall flashing at least 2 inches (50 mm).
4. Seal jacket to wall flashing with flashing sealant.

D. Insulation Installation at Interior Wall and Partition Penetrations (That Are Not Fire Rated): Install insulation continuously through walls and partitions.

E. Insulation Installation at Fire-Rated Wall and Partition Penetrations: Install insulation continuously through penetrations of fire-rated walls and partitions.

1. Comply with requirements in Division 07 Section "Penetration Firestopping"irestopping and fire-resistive joint sealers.

F. Insulation Installation at Floor Penetrations:

1. Pipe: Install insulation continuously through floor penetrations.
2. Seal penetrations through fire-rated assemblies. Comply with requirements in Division 07 Section "Penetration Firestopping."

3.4 EQUIPMENT, TANK, AND VESSEL INSULATION INSTALLATION

A. Mineral Fiber, Pipe and Tank Insulation Installation for Tanks and Vessels: Secure insulation with adhesive and anchor pins and speed washers.

1. Apply adhesives according to manufacturer's recommended coverage rates per unit area, for 100 percent coverage of tank and vessel surfaces.
2. Groove and score insulation materials to fit as closely as possible to equipment, including contours. Bevel insulation edges for cylindrical surfaces for tight joints. Stagger end joints.
3. Protect exposed corners with secured corner angles.
4. Install adhesively attached or self-sticking insulation hangers and speed washers on sides of tanks and vessels as follows:

    a. Do not weld anchor pins to ASME-labeled pressure vessels.
    b. Select insulation hangers and adhesive that are compatible with service temperature and with substrate.
    c. On tanks and vessels, maximum anchor-pin spacing is 3 inches (75 mm) from insulation end joints, and 16 inches (400 mm) o.c. in both directions.
    d. Do not overcompress insulation during installation.
    e. Cut and miter insulation segments to fit curved sides and domed heads of tanks and vessels.
    f. Impale insulation over anchor pins and attach speed washers.
    g. Cut excess portion of pins extending beyond speed washers or bend parallel with insulation surface. Cover exposed pins and washers with tape matching insulation facing.

5. Secure each layer of insulation with stainless-steel or aluminum bands. Select band material compatible with insulation materials.
6. Where insulation hangers on equipment and vessels are not permitted or practical and where insulation support rings are not provided, install a girdle network for securing insulation. Stretch prestressed aircraft cable around the diameter of vessel and make taut with clamps, turnbuckles, or breather springs. Place one circumferential girdle around equipment approximately 6 inches (150 mm) from each end. Install wire or cable between two circumferential girdles 12 inches (300 mm) o.c. Install a wire ring around each end and around outer periphery of center openings, and stretch prestressed aircraft cable radially from the wire ring to nearest circumferential girdle. Install additional circumferential girdles along the body of equipment or tank at a minimum spacing of 48 inches (1200 mm) o.c. Use this network for securing insulation with tie wire or bands.
7. Stagger joints between insulation layers at least 3 inches (75 mm).

8. Install insulation in removable segments on equipment access doors, manholes, handholes, and other elements that require frequent removal for service and inspection.
9. Bevel and seal insulation ends around manholes, handholes, ASME stamps, and nameplates.
10. For equipment with surface temperatures below ambient, apply mastic to open ends, joints, seams, breaks, and punctures in insulation.

3.5 GENERAL PIPE INSULATION INSTALLATION

A. Requirements in this article generally apply to all insulation materials except where more specific requirements are specified in various pipe insulation material installation articles.

B. Insulation Installation on Fittings, Valves, Strainers, Flanges, and Unions:

1. Install insulation over fittings, valves, strainers, flanges, unions, and other specialties with continuous thermal and vapor-retarder integrity, unless otherwise indicated.
2. Insulate pipe elbows using preformed fitting insulation or mitered fittings made from same material and density as adjacent pipe insulation. Each piece shall be butted tightly against adjoining piece and bonded with adhesive. Fill joints, seams, voids, and irregular surfaces with insulating cement finished to a smooth, hard, and uniform contour that is uniform with adjoining pipe insulation.
3. Insulate tee fittings with preformed fitting insulation or sectional pipe insulation of same material and thickness as used for adjacent pipe. Cut sectional pipe insulation to fit. Butt each section closely to the next and hold in place with tie wire. Bond pieces with adhesive.
4. Insulate valves using preformed fitting insulation or sectional pipe insulation of same material, density, and thickness as used for adjacent pipe. Overlap adjoining pipe insulation by not less than two times the thickness of pipe insulation, or one pipe diameter, whichever is thicker. For valves, insulate up to and including the bonnets, valve stuffing-box studs, bolts, and nuts. Fill joints, seams, and irregular surfaces with insulating cement.
5. Insulate strainers using preformed fitting insulation or sectional pipe insulation of same material, density, and thickness as used for adjacent pipe. Overlap adjoining pipe insulation by not less than two times the thickness of pipe insulation, or one pipe diameter, whichever is thicker. Fill joints, seams, and irregular surfaces with insulating cement. Insulate strainers so strainer basket flange or plug can be easily removed and replaced without damaging the insulation and jacket. Provide a removable reusable insulation cover. For below ambient services, provide a design that maintains vapor barrier.
6. Insulate flanges and unions using a section of oversized preformed pipe insulation. Overlap adjoining pipe insulation by not less than two times the thickness of pipe insulation, or one pipe diameter, whichever is thicker.
7. Cover segmented insulated surfaces with a layer of finishing cement and coat with a mastic. Install vapor-barrier mastic for below ambient services and a breather mastic for above ambient services. Reinforce the mastic with fabric-reinforcing mesh. Trowel the mastic to a smooth and well-shaped contour.
8. For services not specified to receive a field-applied jacket except for flexible elastomeric and polyolefin, install fitted PVC cover over elbows, tees, strainers, valves, flanges, and unions. Terminate ends with PVC end caps. Tape PVC covers to adjoining insulation facing using PVC tape.

9. Stencil or label the outside insulation jacket of each union with the word "UNION." Match size and color of pipe labels.

C. Insulate instrument connections for thermometers, pressure gages, pressure temperature taps, test connections, flow meters, sensors, switches, and transmitters on insulated pipes, vessels, and equipment. Shape insulation at these connections by tapering it to and around the connection with insulating cement and finish with finishing cement, mastic, and flashing sealant.

D. Install removable insulation covers at locations indicated. Installation shall conform to the following:

1. Make removable flange and union insulation from sectional pipe insulation of same thickness as that on adjoining pipe. Install same insulation jacket as adjoining pipe insulation.
2. When flange and union covers are made from sectional pipe insulation, extend insulation from flanges or union long at least two times the insulation thickness over adjacent pipe insulation on each side of flange or union. Secure flange cover in place with stainless-steel or aluminum bands. Select band material compatible with insulation and jacket.
3. Construct removable valve insulation covers in same manner as for flanges except divide the two-part section on the vertical center line of valve body.
4. When covers are made from block insulation, make two halves, each consisting of mitered blocks wired to stainless-steel fabric. Secure this wire frame, with its attached insulation, to flanges with tie wire. Extend insulation at least 2 inches (50 mm) over adjacent pipe insulation on each side of valve. Fill space between flange or union cover and pipe insulation with insulating cement. Finish cover assembly with insulating cement applied in two coats. After first coat is dry, apply and trowel second coat to a smooth finish.
5. Unless a PVC jacket is indicated in field-applied jacket schedules, finish exposed surfaces with a metal jacket.

3.6 MINERAL-FIBER INSULATION INSTALLATION

A. Insulation Installation on Straight Pipes and Tubes:

1. Secure each layer of preformed pipe insulation to pipe with wire or bands and tighten bands without deforming insulation materials.
2. Where vapor barriers are indicated, seal longitudinal seams, end joints, and protrusions with vapor-barrier mastic and joint sealant.
3. For insulation with factory-applied jackets on above ambient surfaces, secure laps with outward clinched staples at 6 inches (150 mm) o.c.
4. For insulation with factory-applied jackets on below ambient surfaces, do not staple longitudinal tabs but secure tabs with additional adhesive as recommended by insulation material manufacturer and seal with vapor-barrier mastic and flashing sealant.

B. Insulation Installation on Pipe Flanges:

1. Install preformed pipe insulation to outer diameter of pipe flange.
2. Make width of insulation section same as overall width of flange and bolts, plus twice the thickness of pipe insulation.

3. Fill voids between inner circumference of flange insulation and outer circumference of adjacent straight pipe segments with mineral-fiber blanket insulation.
4. Install jacket material with manufacturer's recommended adhesive, overlap seams at least 1 inch (25 mm), and seal joints with flashing sealant.

C. Insulation Installation on Pipe Fittings and Elbows:

1. Install preformed sections of same material as straight segments of pipe insulation when available.
2. When preformed insulation elbows and fittings are not available, install mitered sections of pipe insulation, to a thickness equal to adjoining pipe insulation. Secure insulation materials with wire or bands.

D. Insulation Installation on Valves and Pipe Specialties:

1. Install preformed sections of same material as straight segments of pipe insulation when available.
2. When preformed sections are not available, install mitered sections of pipe insulation to valve body.
3. Arrange insulation to permit access to packing and to allow valve operation without disturbing insulation.
4. Install insulation to flanges as specified for flange insulation application.

3.7 FINISHES

A. Exposed piping insulation visible to the public shall be finished/painted as per the architectural drawings. Piping insulation that is not located in areas visible to the general public shall not be painted unless otherwise indicated on the architectural drawings, plumbing drawings, or recommended by the manufacturer.

B. Equipment and Pipe Insulation with ASJ or Other Paintable Jacket Material: Paint jacket with paint system identified below and as specified in Division 09 painting Sections.

1. Flat Acrylic Finish: Two finish coats over a primer that is compatible with jacket material and finish coat paint. Add fungicidal agent to render fabric mildew proof.

a. Finish Coat Material: Interior, flat, latex-emulsion size.

C. Color: Final color as selected by Architect. Vary first and second coats to allow visual inspection of the completed Work.

D. Do not field paint aluminum or stainless-steel jackets.

3.8 FIELD QUALITY CONTROL

A. Perform tests and inspections.

B. Tests and Inspections:

1. Inspect field-insulated equipment, randomly selected by Architect, by removing field-applied jacket and insulation in layers in reverse order of their installation. Extent of inspection shall be limited to one location for each type of equipment defined in the "Equipment Insulation Schedule" Article. For large equipment, remove only a portion adequate to determine compliance.
2. Inspect pipe, fittings, strainers, and valves, randomly selected by Architect, by removing field-applied jacket and insulation in layers in reverse order of their installation. Extent of inspection shall be limited to three locations of straight pipe, three locations of threaded fittings, three locations of welded fittings, two locations of threaded strainers, two locations of welded strainers, three Insert number locations of threaded valves, and three Insert number locations of flanged valves for each pipe service defined in the "Piping Insulation Schedule, General" Article.

C. All insulation applications will be considered defective Work if sample inspection reveals noncompliance with requirements.

3.9 EQUIPMENT INSULATION SCHEDULE

A. Insulation materials and thicknesses are identified below. If more than one material is listed for a type of equipment, selection from materials listed is Contractor's option.

B. Insulate indoor and outdoor equipment in paragraphs below that is not factory insulated.

C. Heat-Exchanger (Water-to-Water for Domestic Water Heating Service) Insulation: Mineral-Fiber Pipe and Tank: 2 inches (50 mm) thick.

D. Domestic water, domestic chilled-water (potable), and domestic hot-water hydropneumatic tank insulation shall be the following:
   1. Mineral-Fiber Pipe and Tank: 1 inch (25 mm) thick.

E. Piping System Filter-Housing Insulation: Mineral-Fiber Pipe and Tank: 2 inches (50 mm) thick.

3.10 PIPING INSULATION SCHEDULE, GENERAL

A. Acceptable preformed pipe and tubular insulation materials and thicknesses are identified for each piping system and pipe size range. If more than one material is listed for a piping system, selection from materials listed is Contractor's option.

B. Items Not Insulated: Unless otherwise indicated, do not install insulation on the following:

   1. Drainage piping located in crawl spaces.
   2. Underground piping.
   3. Chrome-plated pipes and fittings unless there is a potential for personnel injury.

3.11 INDOOR PIPING INSULATION SCHEDULE

A. Domestic Cold, Hot, and Recirculated Hot Water piping: Insulation shall be the following:

1. Copper piping for all domestic water services up to ¾" pipe size: Mineral-Fiber, Preformed Pipe Insulation, Type I: 1/2 inch (13 mm) thick.
2. Copper piping for all domestic water services greater than ¾" pipe size: Mineral-Fiber, Preformed Pipe Insulation, Type I: 1 inch (25 mm) thick.
3. CPVC piping serving hot and recirculated hot water up to ¾" pipe size: Mineral-Fiber, Preformed Pipe Insulation, Type I: 1/2 inch (13 mm) thick.
4. CPVC piping serving hot and recirculated hot water greater than ¾" pipe size: Mineral-Fiber, Preformed Pipe Insulation, Type I: 1 inch (25 mm) thick.
5. All piping located in an exterior wall for all domestic water services up to ¾" pipe size: Mineral-Fiber, Preformed Pipe Insulation, Type I: 1/2 inch (13 mm) thick.
6. All piping located in an exterior wall for all domestic water services greater than ¾" pipe size: Mineral-Fiber, Preformed Pipe Insulation, Type I: 1 inch (25 mm) thick.
7. CPVC piping serving domestic cold water is not required to be insulated unless located in an exterior wall, required by the local code officials, or otherwise indicated to be insulated on the drawings.

B. Domestic Chilled Water (Potable): Insulation shall be the following:
1. Mineral-Fiber, Preformed Pipe Insulation, Type I: 1 inch (25 mm) thick.

C. Stormwater and Overflow: Insulation shall be the following:
1. Mineral-Fiber, Preformed Pipe Insulation, Type I or Mineral-Fiber Pipe and Tank : 1 inch (25 mm) thick.

D. Roof Drain and Overflow Drain Bodies: Insulation shall be the following:
1. Mineral-Fiber, Preformed Pipe Insulation, Type I or Mineral-Fiber Pipe and Tank: 1 inch (25 mm) thick.

E. Sanitary Waste Piping Where Heat Tracing Is Installed: Insulation shall be the following:
1. Mineral-Fiber, Preformed Pipe Insulation, Type I or Mineral-Fiber Pipe and Tank: 1-1/2 inches (38 mm) thick.

3.12 OUTDOOR, ABOVEGROUND PIPING INSULATION SCHEDULE

A. Domestic Water Piping: Insulation shall be the following:
1. Mineral-Fiber, Preformed Pipe Insulation, Type I or Mineral-Fiber Pipe and Tank: 2 inches (50 mm) thick.

B. Domestic Hot and Recirculated Hot Water: Insulation shall be the following:
1. Mineral-Fiber, Preformed Pipe Insulation, Type I or Mineral-Fiber Pipe and Tank: 2 inches (50 mm) thick.

C. Sanitary Waste Piping Where Heat Tracing Is Installed: Insulation shall be the following:
1. Mineral-Fiber, Preformed Pipe Insulation, Type I or Mineral-Fiber Pipe and Tank: 2 inches (50 mm) thick.

END OF SECTION 220700

SECTION 221116 - DOMESTIC WATER PIPING

PART 1 - GENERAL

1.1 SUMMARY

A. Section Includes:

1. Under-building slab and aboveground domestic water pipes, tubes, fittings, and specialties inside the building.
2. Specialty valves.
3. Flexible connectors.
4. Water meters furnished by utility company for installation by Contractor.
5. Water meters.
6. Escutcheons.
7. Sleeves and sleeve seals.

1.2 PERFORMANCE REQUIREMENTS

A. Seismic Performance: Domestic water piping and support and installation shall withstand effects of earthquake motions determined according to ASCE/SEI 7 or as directed by local codes.

1.3 SUBMITTALS

A. Product Data: For each type of product indicated.

B. LEED Submittal:

1. Product Data for Credit EQ 4.1: For solvent cements and adhesive primers, including printed statement of VOC content.

C. Field quality-control reports.

1.4 QUALITY ASSURANCE

A. Piping materials shall bear label, stamp, or other markings of specified testing agency.

B. Comply with NSF 14 for plastic, potable domestic water piping and components. Include marking "NSF-pw" on piping.

C. Comply with NSF 61 for potable domestic water piping and components.

PART 2 - PRODUCTS

2.1 PIPING MATERIALS

A. Comply with requirements in "Piping Schedule" Article for applications of pipe, tube, fitting materials, and joining methods for specific services, service locations, and pipe sizes.

2.2 COPPER TUBE AND FITTINGS

A. Hard Copper Tube: ASTM B 88, Type L (ASTM B 88M, Type B) water tube, drawn temper.

1. Cast-Copper Solder-Joint Fittings: ASME B16.18, pressure fittings.
2. Wrought-Copper Solder-Joint Fittings: ASME B16.22, wrought-copper pressure fittings.
3. Bronze Flanges: ASME B16.24, Class 150, with solder-joint ends.
4. Copper Unions: MSS SP-123, cast-copper-alloy, hexagonal-stock body, with ball-and-socket, metal-to-metal seating surfaces, and solder-joint or threaded ends.

B. Soft Copper Tube: ASTM B 88, Type K (ASTM B 88M, Type A) and ASTM B 88, Type L (ASTM B 88M, Type B) water tube, annealed temper.

1. Copper Solder-Joint Fittings: ASME B16.22, wrought-copper pressure fittings.

2.3 DUCTILE-IRON PIPE AND FITTINGS

A. Push-on-Joint, Ductile-Iron Pipe: AWWA C151, with push-on-joint bell and plain spigot end unless grooved or flanged ends are indicated.

1. Standard-Pattern, Push-on-Joint Fittings: AWWA C110, ductile or gray iron.

a. Gaskets: AWWA C111, rubber.

2. Compact-Pattern, Push-on-Joint Fittings: AWWA C153, ductile iron.

a. Gaskets: AWWA C111, rubber.

2.4 CPVC PIPING AND FITTING SYSTEM

A. CPVC Tubing System for Pipe Sizes ½” Through 2”:

1. Product Description: FlowGuard Gold® CPVC pipe and fittings shall be extruded/molded from CPVC compounds manufactured by Lubrizol. The pipe compound shall meet cell class 24448 and the fitting compound shall meet cell class 23447 as defined by ASTM D1784. Both the pipe and the fitting compounds shall be certified by NSF International for use with potable water.

2. Pipe and Fittings: Pipe and fittings shall meet or exceed the requirements of ASTM D2846.

3. Solvent Cement: All socket type joints shall be assembled employing solvent cements that meet or exceed the requirements of ASTM F493. The standard practice for safe handling of solvent cements shall be in accordance with ASTM F402. Solvent cement shall be listed by NSF International for use with potable water, and approved by the FlowGuard Gold® pipe and fittings manufacturers.

4. Limitations: FlowGuard Gold® pipe and fittings are intended for use at a maximum working pressure of 100 psi at 180°F (400 psi at 73°F).

B. CPVC Tubing System for Pipe Sizes 2-1/2" and Larger:

1. Product Description: Corzan® CPVC pipe and fittings are extruded/molded from CPVC compounds manufactured by Lubrizol Advanced Materials. The pipe compounds shall meet cell class 24448 for high impact/high heat distortion temperature pipe (available through 6" and up to 8" from select manufacturers) or 23447 for pipe 8" or greater as defined by ASTM D1784. The pipe shall be certified by NSF International for use with potable water. Corzan CPVC fittings compound shall meet cell class 23447 and carry a pressure rating listed by PPI (Plastics Pipe Institute). This Corzan CPVC compound shall be pressure rated in accordance with ASTM D-2387 and PPI TR-3 and have hydrostatic design bases of 4000 psi at 72°F and 1000 psi at 180°F as listed in PPI publication TR-4.

2. Pipe and Fittings:

a. Pipe shall meet or exceed the requirements of ASTM F441 in Schedule 80.

b. Fittings shall meet or exceed the requirements of ASTM F437 (schedule 80 threaded), and ASTM F439 (schedule 80 socket).

3. Solvent Cement: All socket type joints shall be assembled employing solvent cements that meet or exceed the requirements of ASTM F493 and primers that meet or exceed the requirements of ASTM F656. The standard practice for safe handling of solvent cements shall be in accordance with ASTM F402. Solvent cement and primer shall be listed by NSF International for use with potable water, and approved by the Corzan® pipe and fittings manufacturers.

4. Limitations: Pressure ratings for Corzan pipe and fittings vary depending on the pipe size and the water temperature. Consult the manufacturer's design and installation guide for more information.

2.5 PVC PIPE AND FITTINGS

A. PVC Pipe: ASTM D 1785, Schedule 40 and Schedule 80.

1. PVC Socket Fittings: ASTM D 2466 for Schedule 40 and ASTM D 2467 for Schedule 80.

2.6 PEX TUBE AND FITTINGS

A. PEX Distribution System: ASTM F 876/877 tubing.

B. Fittings for PEX Tube: ASTM F 876/877, metal-insert type with copper or stainless-steel crimp rings and matching PEX-AL-PEX tube dimensions.

2.7 PIPING JOINING MATERIALS

A. Pipe-Flange Gasket Materials: AWWA C110, rubber, flat face, 1/8 inch (3.2 mm) thick or ASME B16.21, nonmetallic and asbestos free, unless otherwise indicated; full-face or ring type unless otherwise indicated.

B. Metal, Pipe-Flange Bolts and Nuts: ASME B18.2.1, carbon steel unless otherwise indicated.

C. Solder Filler Metals: ASTM B 32, lead-free alloys. Include water-flushable flux according to ASTM B 813.

D. Brazing Filler Metals: AWS A5.8/A5.8M, BCuP Series, copper-phosphorus alloys for general-duty brazing unless otherwise indicated.

E. Solvent Cements for Joining CPVC Piping and Tubing

1. See Section 2.4 above for CPVC Solvent Cement requirements.

F. Solvent Cements for Joining PVC Piping: ASTM D 2564. Include primer according to ASTM F 656.

1. Use PVC solvent cement that has a VOC content of 510 g/L or less when calculated according to 40 CFR 59, Subpart D (EPA Method 24).
2. Use adhesive primer that has a VOC content of 550 g/L or less when calculated according to 40 CFR 59, Subpart D (EPA Method 24).

G. Plastic, Pipe-Flange Gaskets, Bolts, and Nuts: Type and material recommended by piping system manufacturer unless otherwise indicated.

2.8 TRANSITION FITTINGS

A. Fitting-Type Transition Couplings: Manufactured piping coupling or specified piping system fitting.

B. Sleeve-Type Transition Coupling: AWWA C219.

C. Plastic-to-Metal Transition Fittings:

1. Description: CPVC or PVC one-piece fitting with manufacturer's Schedule 80 equivalent dimensions; one end with threaded brass insert and one solvent-cement-socket end.

D. Plastic-to-Metal Transition Unions:

1. Description: CPVC or PVC four-part union. Include brass or stainless-steel threaded end, solvent-cement-joint plastic end, rubber O-ring, and union nut.

2.9 FLEXIBLE CONNECTORS

A. Bronze-Hose Flexible Connectors: Corrugated-bronze tubing with bronze wire-braid covering and ends brazed to inner tubing.

1. Working-Pressure Rating: Minimum 200 psig (1380 kPa).
2. End Connections NPS 2 (DN 50) and Smaller: Threaded copper pipe or plain-end copper tube.
3. End Connections NPS 2-1/2 (DN 65) and Larger: Flanged copper alloy.

B. Stainless-Steel-Hose Flexible Connectors: Corrugated-stainless-steel tubing with stainless-steel wire-braid covering and ends welded to inner tubing.

1. Working-Pressure Rating: Minimum 200 psig (1380 kPa).
2. End Connections NPS 2 (DN 50) and Smaller: Threaded steel-pipe nipple.
3. End Connections NPS 2-1/2 (DN 65) and Larger: Flanged steel nipple.

2.10 WATER METERS

A. Displacement-Type Water Meters:

1. Description:

a. Standard: AWWA C700.
b. Pressure Rating: 150-psig (1035-kPa) working pressure.
c. Body Design: Nutating disc; totalization meter.
d. Registration: In gallons (liters) or cubic feet (cubic meters) as required by utility.
e. Case: Bronze.
f. End Connections: Threaded.

B. Compound-Type Water Meters:

1. Description:

a. Standard: AWWA C702.
b. Pressure Rating: 150-psig (1035-kPa) working pressure.
c. Body Design: With integral mainline and bypass meters; totalization meter.
d. Registration: In gallons (liters) or cubic feet (cubic meters) as required by utility company.
e. Case: Bronze.
f. Pipe Connections: Flanged.

C. Remote Registration System: Water meters shall be compatible with the landlord and/or utility company meter reading system as indicated on drawings. If no meter reading system is indicated on drawings, the contractor contact the landlord for sub-meter reading information or the utility company for primary water meter reading information prior to ordering the actual water meters. Plumbing contractor shall coordinate with other trades for power requirements, if any, of all water meter reading equipment, including, but not limited to, the water meter, transmitters, receivers, repeaters, dialers, and alarms.

PART 3 - EXECUTION

3.1 EARTHWORK

A. Comply with requirements in Division 31 Section "Earth Moving" for excavating, trenching, and backfilling.

3.2 PIPING INSTALLATION

A. Drawing plans, schematics, and diagrams indicate general location and arrangement of domestic water piping. Indicated locations and arrangements are used to size pipe and calculate friction loss, expansion, and other design considerations. Install piping as indicated unless deviations to layout are approved on Coordination Drawings.

B. Install copper tubing under building slab according to CDA's "Copper Tube Handbook."

C. CPVC Piping Systems: Installation practices such as pipe support spacing, bracing, allowance for thermal expansion/contraction, solvent cementing and handling and storage shall be in accordance with the manufacturer’s instructions and this specification.

D. Install ductile-iron piping under building slab with restrained joints according to AWWA C600 and AWWA M41.

E. Install shutoff valve, hose-end drain valve, strainer, pressure gage, and test tee with valve, inside the building at each domestic water service entrance. Comply with requirements in Division 22 Section "Meters and Gages for Plumbing Piping" for pressure gages and Division 22 Section "Domestic Water Piping Specialties" for drain valves and strainers.

F. Install shutoff valve immediately upstream of each dielectric fitting.

G. Install water-pressure-reducing valves downstream from shutoff valves. Comply with requirements in Division 22 Section "Domestic Water Piping Specialties" for pressure-reducing valves.

H. Install domestic water piping level with 0.25 percent slope downward toward drain and plumb.

I. Rough-in domestic water piping for water-meter installation according to utility company's requirements.

J. Install seismic restraints on piping. Comply with requirements in Division 22 Section "Vibration and Seismic Controls for Plumbing Piping and Equipment" for seismic-restraint devices.

K. Install piping concealed from view and protected from physical contact by building occupants unless otherwise indicated and except in equipment rooms and service areas.

L. Install piping indicated to be exposed and piping in equipment rooms and service areas at right angles or parallel to building walls. Diagonal runs are prohibited unless specifically indicated otherwise.

M. Install piping above accessible ceilings to allow sufficient space for ceiling panel removal, and coordinate with other services occupying that space.

N. Install piping adjacent to equipment and specialties to allow service and maintenance.

O. Install piping to permit valve servicing.

P. Install nipples, unions, special fittings, and valves with pressure ratings the same as or higher than system pressure rating used in applications below unless otherwise indicated.

Q. Install piping free of sags and bends.

R. Install fittings for changes in direction and branch connections.

S. Install unions in copper tubing at final connection to each piece of equipment, machine, and specialty.

T. Install pressure gages on suction and discharge piping from each plumbing pump and packaged booster pump.

U. Install thermostats in hot-water circulation piping.

V. Install thermometers on outlet piping from each water heater.

3.3 JOINT CONSTRUCTION

A. Ream ends of pipes and tubes and remove burrs. Bevel plain ends of steel pipe.

B. Remove scale, slag, dirt, and debris from inside and outside of pipes, tubes, and fittings before assembly.

C. Threaded Joints: Thread pipe with tapered pipe threads according to ASME B1.20.1. Cut threads full and clean using sharp dies. Ream threaded pipe ends to remove burrs and restore full ID. Join pipe fittings and valves as follows:

1. Apply appropriate tape or thread compound to external pipe threads.
2. Damaged Threads: Do not use pipe or pipe fittings with threads that are corroded or damaged.

D. Brazed Joints: Join copper tube and fittings according to CDA's "Copper Tube Handbook," "Brazed Joints" Chapter.

E. Soldered Joints: Apply ASTM B 813, water-flushable flux to end of tube. Join copper tube and fittings according to ASTM B 828 or CDA's "Copper Tube Handbook."

F. Flanged Joints: Select appropriate asbestos-free, nonmetallic gasket material in size, type, and thickness suitable for domestic water service. Join flanges with gasket and bolts according to ASME B31.9.

G. Plastic Piping Solvent-Cement Joints: Clean and dry joining surfaces. Join pipe and fittings according to the following:

1. Comply with ASTM F 402 for safe-handling practice of cleaners, primers, and solvent cements. Apply primer.
2. CPVC Piping: Join according to ASTM D 2846/D 2846M Appendix.
3. PVC Piping: Join according to ASTM D 2855.

H. Dissimilar-Material Piping Joints: Make joints using adapters compatible with materials of both piping systems.

3.4 VALVE INSTALLATION

A. General-Duty Valves: Comply with requirements in Division 22 Section "General-Duty Valves for Plumbing Piping" for valve installations.

B. Install shutoff valve close to water main on each branch and riser serving plumbing fixtures or equipment, on each water supply to equipment, and on each water supply to plumbing fixtures that do not have supply stops. Use ball or gate valves for piping NPS 2 (DN 50) and smaller. Use butterfly or gate valves for piping NPS 2-1/2 (DN 65) and larger.

C. Install drain valves for equipment at base of each water riser, at low points in horizontal piping, and where required to drain water piping. Drain valves are specified in Division 22 Section "Domestic Water Piping Specialties."

1. Hose-End Drain Valves: At low points in water mains, risers, and branches.
2. Stop-and-Waste Drain Valves: Instead of hose-end drain valves where indicated.

D. Install balancing valve in each hot-water circulation return branch and discharge side of each pump and circulator. Set balancing valves partly open to restrict but not stop flow. Use ball valves for piping NPS 2 (DN 50) and smaller and butterfly valves for piping NPS 2-1/2 (DN 65) and larger. Comply with requirements in Division 22 Section "Domestic Water Piping Specialties" for balancing valves.

3.5 TRANSITION FITTING INSTALLATION

A. Install transition couplings at joints of dissimilar piping.

B. Transition Fittings in Underground Domestic Water Piping:

1. NPS 1-1/2 (DN 40) and Smaller: Fitting-type coupling.
2. NPS 2 (DN 50) and Larger: Sleeve-type coupling.

C. Transition Fittings in Aboveground Domestic Water Piping NPS 2 (DN 50) and Smaller: Plastic-to-metal transition fittings or unions.

3.6 FLEXIBLE CONNECTOR INSTALLATION

A. Install flexible connectors in suction and discharge piping connections to each domestic water pump and in suction and discharge manifold connections to each domestic water booster pump.

B. Install bronze-hose flexible connectors in copper domestic water tubing.

C. Install stainless-steel-hose flexible connectors in steel domestic water piping.

3.7 WATER METER INSTALLATION

A. Rough-in domestic water piping for water meter installation, and install water meters according to utility company's requirements. Contact utility company directly to determine their requirements.

B. Install water meters according to AWWA M6, utility company's requirements, and the following:

C. Install displacement-type water meters with shutoff valve on water-meter inlet. Install valve on water-meter outlet and valved bypass around meter unless prohibited by authorities having jurisdiction.

D. Install compound-type water meters with shutoff valves on water-meter inlet and outlet and on valved bypass around meter. Support meters, valves, and piping on brick or concrete piers.

E. Install remote registration system according to standards of utility company and of authorities having jurisdiction.

3.8 HANGER AND SUPPORT INSTALLATION

A. Comply with requirements in Division 22 Section "Hangers and Supports for Plumbing Piping and Equipment" for pipe hanger and support products and installation.

1. Vertical Piping: MSS Type 8 or 42, clamps.
2. Individual, Straight, Horizontal Piping Runs:

    a. 100 Feet (30 m) and Less: MSS Type 1, adjustable, steel clevis hangers.
    b. Longer Than 100 Feet (30 m): MSS Type 43, adjustable roller hangers.

3. Base of Vertical Piping: MSS Type 52, spring hangers.

B. Support vertical piping and tubing at base and at each floor.

C. Rod diameter may be reduced one size for double-rod hangers, to a minimum of 3/8 inch (10 mm).

D. Install hangers for copper tubing with the following maximum horizontal spacing and minimum rod diameters:

1. NPS 3/4 (DN 20) and Smaller: 60 inches (1500 mm) with 3/8-inch (10-mm) rod.
2. NPS 1 and NPS 1-1/4 (DN 25 and DN 32): 72 inches (1800 mm) with 3/8-inch (10-mm) rod.
3. NPS 1-1/2 and NPS 2 (DN 40 and DN 50): 96 inches (2400 mm) with 3/8-inch (10-mm) rod.
4. NPS 2-1/2 (DN 65): 108 inches (2700 mm) with 1/2-inch (13-mm) rod.
5. NPS 3 to NPS 5 (DN 80 to DN 125): 10 feet (3 m) with 1/2-inch (13-mm) rod.
6. NPS 6 (DN 150): 10 feet (3 m) with 5/8-inch (16-mm) rod.

E. Install supports for vertical copper tubing every 10 feet (3 m).

F. Install hangers for steel piping with the following maximum horizontal spacing and minimum rod diameters:

1. NPS 1-1/4 (DN 32) and Smaller: 84 inches (2100 mm) with 3/8-inch (10-mm) rod.
2. NPS 1-1/2 (DN 40): 108 inches (2700 mm) with 3/8-inch (10-mm) rod.
3. NPS 2 (DN 50): 10 feet (3 m) with 3/8-inch (10-mm) rod.
4. NPS 2-1/2 (DN 65): 11 feet (3.4 m) with 1/2-inch (13-mm) rod.
5. NPS 3 and NPS 3-1/2 (DN 80 and DN 90): 12 feet (3.7 m) with 1/2-inch (13-mm) rod.
6. NPS 4 and NPS 5 (DN 100 and DN 125): 12 feet (3.7 m) with 5/8-inch (16-mm) rod.
7. NPS 6 (DN 150): 12 feet (3.7 m) with 3/4-inch (19-mm) rod.

G. Install supports for vertical steel piping every 15 feet (4.5 m).

H. Install vinyl-coated hangers for CPVC piping with the following maximum horizontal spacing and minimum rod diameters:

1. NPS 1 (DN 25) and Smaller: 36 inches (900 mm) with 3/8-inch (10-mm) rod.
2. NPS 1-1/4 to NPS 2 (DN 32 to DN 50): 48 inches (1200 mm) with 3/8-inch (10-mm) rod.

I. Install supports for vertical CPVC piping every 60 inches (1500 mm) for NPS 1 (DN 25) and smaller, and every 72 inches (1800 mm) for NPS 1-1/4 (DN 32) and larger.

J. Support piping and tubing not listed in this article according to MSS SP-69 and manufacturer's written instructions.

3.9 CONNECTIONS

A. Drawings indicate general arrangement of piping, fittings, and specialties.

B. Install piping adjacent to equipment and machines to allow service and maintenance.

C. Connect domestic water piping to exterior water-service piping. Use transition fitting to join dissimilar piping materials.

D. Connect domestic water piping to water-service piping with shutoff valve; extend and connect to the following:

1. Domestic Water Booster Pumps: Cold-water suction and discharge piping.
2. Water Heaters: Cold-water inlet and hot-water outlet piping in sizes indicated, but not smaller than sizes of water heater connections.
3. Plumbing Fixtures: Cold- and hot-water supply piping in sizes indicated, but not smaller than required by plumbing code. Comply with requirements in Division 22 plumbing fixture Sections for connection sizes.
4. Equipment: Cold- and hot-water supply piping as indicated, but not smaller than equipment connections. Provide shutoff valve and union for each connection. Use flanges instead of unions for NPS 2-1/2 (DN 65) and larger.

3.10 IDENTIFICATION

A. Identify system components. Comply with requirements in Division 22 Section "Identification for Plumbing Piping and Equipment" for identification materials and installation.

B. Label pressure piping with system operating pressure.

3.11 FIELD QUALITY CONTROL

A. Perform tests and inspections.

B. Piping Inspections:

1. Do not enclose, cover, or put piping into operation until it has been inspected and approved by authorities having jurisdiction.
2. During installation, notify authorities having jurisdiction at least one day before inspection must be made. Perform tests specified below in presence of authorities having jurisdiction:

    a. Roughing-in Inspection: Arrange for inspection of piping before concealing or closing-in after roughing-in and before setting fixtures.
    b. Final Inspection: Arrange final inspection for authorities having jurisdiction to observe tests specified below and to ensure compliance with requirements.

3. Reinspection: If authorities having jurisdiction find that piping will not pass tests or inspections, make required corrections and arrange for reinspection.
4. Reports: Prepare inspection reports and have them signed by authorities having jurisdiction.

C. Piping Tests:

1. Fill domestic water piping. Check components to determine that they are not air bound and that piping is full of water.
2. Test for leaks and defects in new piping and parts of existing piping that have been altered, extended, or repaired. If testing is performed in segments, submit a separate report for each test, complete with diagram of portion of piping tested.
3. Leave new, altered, extended, or replaced domestic water piping uncovered and unconcealed until it has been tested and approved. Expose work that was covered or concealed before it was tested.
4. Cap and subject piping to static water pressure of 50 psig (345 kPa) above operating pressure, without exceeding pressure rating of piping system materials. Isolate test source and allow to stand for four hours. Leaks and loss in test pressure constitute defects that must be repaired.
5. Repair leaks and defects with new materials and retest piping or portion thereof until satisfactory results are obtained.
6. Prepare reports for tests and for corrective action required.

D. Domestic water piping will be considered defective if it does not pass tests and inspections.

E. Prepare test and inspection reports.

3.12 CLEANING

A. Clean and disinfect potable and non-potable domestic water piping as follows:

1. Purge new piping and parts of existing piping that have been altered, extended, or repaired before using.
2. Use purging and disinfecting procedures prescribed by authorities having jurisdiction; if methods are not prescribed, use procedures described in either AWWA C651 or AWWA C652 or follow procedures described below:

   a. Flush piping system with clean, potable water until dirty water does not appear at outlets.
   b. Fill and isolate system according to either of the following:

      1) Fill system or part thereof with water/chlorine solution with at least 50 ppm (50 mg/L) of chlorine. Isolate with valves and allow to stand for 24 hours.
      2) Fill system or part thereof with water/chlorine solution with at least 200 ppm (200 mg/L) of chlorine. Isolate and allow to stand for three hours.

   c. Flush system with clean, potable water until no chlorine is in water coming from system after the standing time.
   d. Submit water samples in sterile bottles to authorities having jurisdiction. Repeat procedures if biological examination shows contamination.

B. Prepare and submit reports of purging and disinfecting activities.

C. Clean interior of domestic water piping system. Remove dirt and debris as work progresses.

3.13 PIPING SCHEDULE

A. See schedule on drawings for applications of pipe, tube, and fitting materials for specific services, service locations, and pipe sizes. If no schedule is provided on the drawings, the requirements listed below in this section apply.

B. Transition and special fittings with pressure ratings at least equal to piping rating may be used in applications below unless otherwise indicated.

C. Flanges and unions may be used for aboveground piping joints unless otherwise indicated.

D. Under-building-slab, domestic water, building service piping, **NPS 3 (DN 80)** and smaller, shall be one of the following:

1. Soft copper tube, **ASTM B 88, Type K (ASTM B 88M, Type A)**; wrought-copper solder-joint fittings; and brazed joints.
2. PVC, Schedule 80 pipe; PVC, Schedule 80 socket fittings; and solvent-cemented joints.

E. Under-building-slab, domestic water, building-service piping, **NPS 4 to NPS 6 (DN 100 to DN 150)**, shall be one of the following:

1. Push-on-joint, ductile-iron pipe; standard- or compact- pattern push-on-joint fittings; and gasketed joints.

2. PVC, Schedule 80 pipe; PVC, Schedule 80 socket fittings; and solvent-cemented joints.

F. Under-building-slab, domestic water piping, **NPS 2 (DN 50)** and smaller, shall be one of the following:

1. Soft copper tube, ASTM B 88, Type L (ASTM B 88M, Type B); wrought-copper solder-joint fittings; and brazed joints.
2. PVC, Schedule 40 pipe; PVC, Schedule 40 socket fittings; and solvent-cemented joints.

G. Aboveground domestic water piping, shall be one of the following as selected by owner:

1. Hard copper tube, **ASTM B 88, Type L (ASTM B 88M, Type B)**; cast- or wrought-copper solder-joint fittings; and soldered joints.
2. CPVC Tubing System: CPVC tube; CPVC socket fittings; and solvent-cemented joints.

3.14 VALVE SCHEDULE

A. Drawings indicate valve types to be used. Where specific valve types are not indicated, the following requirements apply:

1. Shutoff Duty: Use ball or gate valves for piping NPS 2 (DN 50) and smaller. Use butterfly, ball, or gate valves with flanged ends for piping NPS 2-1/2 (DN 65) and larger.
2. Throttling Duty: Use ball or globe valves for piping NPS 2 (DN 50) and smaller. Use butterfly or ball valves with flanged ends for piping NPS 2-1/2 (DN 65) and larger.
3. Hot-Water Circulation Piping, Balancing Duty: Memory-stop balancing valves.
4. Drain Duty: Hose-end drain valves.

B. Use check valves to maintain correct direction of domestic water flow to and from equipment.

C. Iron grooved-end valves may be used with grooved-end piping.

END OF SECTION 221116

SECTION 221119 - DOMESTIC WATER PIPING SPECIALTIES

PART 1 - GENERAL

1.1 SUMMARY

A. This Section includes the following domestic water piping specialties:

1. Vacuum breakers.
2. Backflow preventers.
3. Water pressure-reducing valves.
4. Balancing valves.
5. Temperature-actuated water mixing valves.
6. Strainers.
7. Hose bibbs.
8. Wall hydrants.
9. Drain valves.
10. Water hammer arresters.
11. Trap-seal primer valves.

B. See Division 22 Section "Domestic Water Piping" for water meters.

1.2 PERFORMANCE REQUIREMENTS

A. Minimum Working Pressure for Domestic Water Piping Specialties: **125 psig (860 kPa)**, unless otherwise indicated.

1.3 SUBMITTALS

A. Product Data: For each type of product indicated.

B. Operation and maintenance data sent to owner.

1.4 QUALITY ASSURANCE

A. NSF Compliance:

1. Comply with NSF 14, "Plastics Piping Components and Related Materials," for plastic domestic water piping components.
2. Comply with NSF 61, "Drinking Water System Components - Health Effects; Sections 1 through 9."

PART 2 - PRODUCTS

2.1 VACUUM BREAKERS

A. Pipe-Applied, Atmospheric-Type Vacuum Breakers:

1. Available Manufacturers: Subject to compliance with requirements, manufacturers offering products that may be incorporated into the Work include, but are not limited to, the following:

   a. Ames Co.
   b. Cash Acme.
   c. Conbraco Industries, Inc.
   d. FEBCO; SPX Valves & Controls.
   e. Rain Bird Corporation.
   f. Toro Company (The); Irrigation Div.
   g. Watts Industries, Inc.; Water Products Div.
   h. Zurn Plumbing Products Group; Wilkins Div.

2. Standard: ASSE 1001.
3. Size: NPS 1/4 to NPS 3 (DN 8 to DN 80), as required to match connected piping.
4. Body: Bronze.
5. Inlet and Outlet Connections: Threaded.
6. Finish: Rough bronze (mechanical rooms) or chrome plated (visible to public).

B. Hose-Connection Vacuum Breakers:

1. Available Manufacturers: Subject to compliance with requirements, manufacturers offering products that may be incorporated into the Work include, but are not limited to, the following:

   a. Arrowhead Brass Products, Inc.
   b. Cash Acme.
   c. Conbraco Industries, Inc.
   d. Legend Valve.
   e. MIFAB, Inc.
   f. Prier Products, Inc.
   g. Watts Industries, Inc.; Water Products Div.
   h. Woodford Manufacturing Company.
   i. Zurn Plumbing Products Group; Light Commercial Operation.
   j. Zurn Plumbing Products Group; Wilkins Div.

2. Standard: ASSE 1001.
3. Body: Bronze, nonremovable, with manual drain.
4. Outlet Connection: Garden-hose threaded complying with ASME B1.20.7.
5. Finish: Chrome, nickel plated or rough bronze to match hose bibb finish.

2.2 BACKFLOW PREVENTERS

A. Intermediate Atmospheric-Vent Backflow Preventers:

1. Available Manufacturers: Subject to compliance with requirements, manufacturers offering products that may be incorporated into the Work include, but are not limited to, the following:

   a. Cash Acme.
   b. Conbraco Industries, Inc.
   c. FEBCO; SPX Valves & Controls.
   d. Honeywell Water Controls.
   e. Legend Valve.
   f. Watts Industries, Inc.; Water Products Div.
   g. Zurn Plumbing Products Group; Wilkins Div.

2. Standard: ASSE 1012.
3. Operation: Continuous-pressure applications.
4. Size: Same size as pipe.
5. Body: Bronze.
6. End Connections: Union, solder joint.
7. Finish: Chrome plated (visible to public) or rough bronze (not visible to public).

B. Reduced-Pressure-Principle Backflow Preventers (RPZ):

1. Basis-of-Design Product: Subject to compliance with requirements, provide the product indicated on drawings or a comparable product by one of the following:

   a. Ames Co.
   b. Conbraco Industries, Inc.
   c. FEBCO; SPX Valves & Controls.
   d. Flomatic Corporation.
   e. Watts Industries, Inc.; Water Products Div.
   f. Zurn Plumbing Products Group; Wilkins Div.

2. Standard: ASSE 1013.
3. Operation: Continuous-pressure applications.
4. Body: Bronze for NPS 2 (DN 50) and smaller, cast iron with interior lining complying with AWWA C550 or that is FDA approved, steel with interior lining complying with AWWA C550 or that is FDA approved, or stainless steel for NPS 2-1/2 (DN 65) and larger.
5. End Connections: Threaded for NPS 2 (DN 50) and smaller; flanged for NPS 2-1/2 (DN 65) and larger.
6. Accessories:

   a. Valves: Ball type with threaded ends on inlet and outlet ofNPS 2 (DN 50) and smaller; outside screw and yoke gate-type with flanged ends on inlet and outlet of NPS 2-1/2 (DN 65) and larger.
   b. Air-Gap Fitting: ASME A112.1.2, matching backflow-preventer connection.

C. Double-Check Backflow-Prevention Assemblies:

1. Basis-of-Design Product: Subject to compliance with requirements, provide the product indicated on drawings or a comparable product by one of the following:

    a. Ames Co.
    b. Conbraco Industries, Inc.
    c. FEBCO; SPX Valves & Controls.
    d. Flomatic Corporation.
    e. Watts Industries, Inc.; Water Products Div.
    f. Zurn Plumbing Products Group; Wilkins Div.

2. Standard: ASSE 1015.
3. Operation: Continuous-pressure applications, unless otherwise indicated.
4. Body: Bronze for NPS 2 (DN 50) and smaller, cast iron with interior lining complying with AWWA C550 or that is FDA approved, steel with interior lining complying with AWWA C550 or that is FDA approved, or stainless steel for NPS 2-1/2 (DN 65) and larger.
5. End Connections: Threaded for NPS 2 (DN 50) and smaller; flanged for NPS 2-1/2 (DN 65) and larger.
6. Accessories:

    a. Valves: Ball type with threaded ends on inlet and outlet of NPS 2 (DN 50) and smaller; outside screw and yoke gate-type with flanged ends on inlet and outlet of NPS 2-1/2 (DN 65) and larger.

D. Backflow-Preventer Test Kits:

1. Available Manufacturers: Subject to compliance with requirements, manufacturers offering products that may be incorporated into the Work include, but are not limited to, the following:

    a. Conbraco Industries, Inc.
    b. FEBCO; SPX Valves & Controls.
    c. Flomatic Corporation.
    d. Watts Industries, Inc.; Water Products Div.
    e. Zurn Plumbing Products Group; Wilkins Div.

2. Description: Factory calibrated, with gages, fittings, hoses, and carrying case with test-procedure instructions.

2.3 WATER PRESSURE-REDUCING VALVES

A. Water Regulators (PRV):

1. Available Manufacturers: Subject to compliance with requirements, manufacturers offering products that may be incorporated into the Work include, but are not limited to, the following:

    a. Cash Acme.
    b. Conbraco Industries, Inc.
    c. Honeywell Water Controls.

d. Watts Industries, Inc.; Water Products Div.
e. Zurn Plumbing Products Group; Wilkins Div.

2. Standard: ASSE 1003.
3. Pressure Rating: Initial working pressure of 150 psig (1035 kPa).
4. Size: See drawings.
5. Design Flow Rate: See drawings.
6. Design Inlet Pressure: See drawings.
7. Design Outlet Pressure Setting: See drawings.
8. Body: Bronze for NPS 2 (DN 50) and smaller; cast iron with interior lining complying with AWWA C550 or that is FDA approved for NPS 2-1/2 and NPS 3 (DN 65 and DN 80).
9. Valves for Booster Heater Water Supply: Include integral bypass.
10. End Connections: Threaded for NPS 2 (DN 50) and smaller; flanged for NPS 2-1/2 and NPS 3 (DN 65 and DN 80).

2.4 BALANCING VALVES

A. Memory-Stop Balancing Valves:

1. Available Manufacturers: Subject to compliance with requirements, manufacturers offering products that may be incorporated into the Work include, but are not limited to, the following:

a. Conbraco Industries, Inc.
b. Crane Co.; Crane Valve Group; Crane Valves.
c. Crane Co.; Crane Valve Group; Jenkins Valves.
d. Crane Co.; Crane Valve Group; Stockham Div.
e. Hammond Valve.
f. Milwaukee Valve Company.
g. NIBCO INC.
h. Red-White Valve Corp.

2. Standard: MSS SP-110 for two-piece, copper-alloy ball valves.
3. Pressure Rating: 400-psig (2760-kPa) minimum CWP.
4. Size: NPS 2 (DN 50) or smaller.
5. Body: Copper alloy.
6. Port: Standard or full port.
7. Ball: Chrome-plated brass.
8. Seats and Seals: Replaceable.
9. End Connections: Solder joint or threaded.
10. Handle: Vinyl-covered steel with memory-setting device.

2.5 TEMPERATURE-ACTUATED WATER MIXING VALVES

A. Water-Temperature Limiting Devices:

1. Available Manufacturers: Subject to compliance with requirements, manufacturers offering products that may be incorporated into the Work include, but are not limited to, the following:

    a. Armstrong International, Inc.
    b. Bradley
    c. Cash Acme.
    d. Conbraco Industries, Inc.
    e. Honeywell Water Controls.
    f. Legend Valve.
    g. Leonard Valve Company.
    h. Powers; a Watts Industries Co.
    i. Symmons Industries, Inc.
    j. Taco, Inc.
    k. Watts Industries, Inc.; Water Products Div.
    l. Zurn Plumbing Products Group; Wilkins Div.

2. Standard: ASSE 1017.
3. Pressure Rating: 125 psig (860 kPa).
4. Type: Thermostatically controlled water mixing valve.
5. Material: Bronze body with corrosion-resistant interior components.
6. Connections: Threaded union inlets and outlet.
7. Accessories: Check stops on hot- and cold-water supplies, and adjustable, temperature-control handle.
8. Tempered-Water Setting: See drawings.
9. Tempered-Water Design Flow Rate: See drawings.
10. Valve Finish: Chrome plated (visible to public) or rough bronze (not visible to public).

B. Primary, Thermostatic, Water Mixing Valves:
1. Basis-of-Design Product: Subject to compliance with requirements, provide the product indicated on drawings or a comparable product by one of the following:

    a. Armstrong International, Inc.
    b. Bradley
    c. Lawler Manufacturing Company, Inc.
    d. Leonard Valve Company.
    e. Powers; a Watts Industries Co.
    f. Symmons Industries, Inc.

2. Standard: ASSE 1017.
3. Pressure Rating: 125 psig (860 kPa).
4. Type: Exposed-mounting, thermostatically controlled water mixing valve.
5. Material: Bronze body with corrosion-resistant interior components.
6. Connections: Threaded union inlets and outlet.
7. Accessories: Manual temperature control, check stops on hot- and cold-water supplies, and adjustable, temperature-control handle.
8. Valve Pressure Rating: 125 psig (860 kPa) minimum, unless otherwise indicated.
9. Tempered-Water Setting: See drawings.
10. Tempered-Water Design Flow Rate: See drawings.
11. Pressure Drop at Design Flow Rate: See drawings.
12. Valve Finish: Rough bronze.

13. Piping Finish: Copper.

2.6 STRAINERS FOR DOMESTIC WATER PIPING

A. Y-Pattern Strainers:

1. Pressure Rating: 125 psig (860 kPa) minimum, unless otherwise indicated.
2. Body: Bronze for NPS 2 (DN 50) and smaller; cast iron with interior lining complying with AWWA C550 or FDA-approved, epoxy coating and for NPS 2-1/2 (DN 65) and larger.
3. End Connections: Threaded for NPS 2 (DN 50) and smaller; flanged for NPS 2-1/2 (DN 65) and larger.
4. Screen: Stainless steel with round perforations, unless otherwise indicated.
5. Perforation Size:

    a. Strainers NPS 2 (DN 50) and Smaller: **0.020 inch (0.51 mm)**.
    b. Strainers NPS 2-1/2 to NPS 4 (DN 65 to DN 100): **0.045 inch (1.14 mm)**.
    c. Strainers NPS 5 (DN 125) and Larger: **0.10 inch (2.54 mm)**.

6. Drain: Pipe plug.

2.7 HOSE BIBBS (HB)

A. Hose Bibbs:

1. Standard: ASME A112.18.1 for sediment faucets.
2. Body Material: Bronze.
3. Seat: Bronze, replaceable.
4. Supply Connections: NPS 1/2 or NPS 3/4 (DN 15 or DN 20) threaded or solder-joint inlet.
5. Outlet Connection: Garden-hose thread complying with ASME B1.20.7.
6. Pressure Rating: 125 psig (860 kPa).
7. Vacuum Breaker: Integral or field-installation, nonremovable, drainable, hose-connection vacuum breaker complying with ASSE 1011.
8. Finish for Equipment Rooms: Rough bronze, or chrome or nickel plated.
9. Finish for Service Areas: Rough bronze.
10. Finish for Finished Rooms: Chrome or nickel plated.
11. Operation for Equipment Rooms: Wheel handle or operating key.
12. Operation for Service Areas: Wheel handle.
13. Operation for Finished Rooms: Wheel handle.
14. Include operating key with each operating-key hose bibb.
15. Include integral wall flange with each chrome- or nickel-plated hose bibb.

2.8 NONFREEZE WALL HYDRANTS (WHYD)

A. Nonfreeze Wall Hydrants:

1. Available Manufacturers: Subject to compliance with requirements, manufacturers offering products that may be incorporated into the Work include, but are not limited to, the following:

    a. Josam Company.
    b. MIFAB, Inc.
    c. Prier Products, Inc.
    d. Smith, Jay R. Mfg. Co.; Division of Smith Industries, Inc.
    e. Tyler Pipe; Wade Div.
    f. Watts Drainage Products Inc.
    g. Woodford Manufacturing Company.
    h. Zurn Plumbing Products Group; Light Commercial Operation.
    i. Zurn Plumbing Products Group; Specification Drainage Operation.

2. Standard: ASME A112.21.3M for concealed and exposed -outlet, self-draining wall hydrants.
3. Pressure Rating: 125 psig (860 kPa).
4. Operation: Loose key.
5. Casing and Operating Rod: Of length required to match wall thickness. Include wall clamp.
6. Inlet: NPS 3/4 or NPS 1 (DN 20 or DN 25).
7. Outlet: Concealed, with integral vacuum breaker and garden-hose thread complying with ASME B1.20.7.
8. Box: Deep, flush mounting with cover.
9. Box and Cover Finish: Polished nickel bronze.
10. Outlet: Exposed, with integral vacuum breaker and garden-hose thread complying with ASME B1.20.7.
11. Nozzle and Wall-Plate Finish: Polished nickel bronze.
12. Operating Keys(s): Two with each wall hydrant.

2.9 DRAIN VALVES

A. Ball-Valve-Type, Hose-End Drain Valves:

1. Standard: MSS SP-110 for standard-port, two-piece ball valves.
2. Pressure Rating: 400-psig (2760-kPa) minimum CWP.
3. Size: NPS 3/4 (DN 20).
4. Body: Copper alloy.
5. Ball: Chrome-plated brass.
6. Seats and Seals: Replaceable.
7. Handle: Vinyl-covered steel.
8. Inlet: Threaded or solder joint.
9. Outlet: Threaded, short nipple with garden-hose thread complying with ASME B1.20.7 and cap with brass chain.

2.10 WATER HAMMER ARRESTERS

A. Water Hammer Arresters (WHA):

1. Available Manufacturers: Subject to compliance with requirements, manufacturers offering products that may be incorporated into the Work include, but are not limited to, the following:

    a. AMTROL, Inc.
    b. Josam Company.
    c. MIFAB, Inc.
    d. PPP Inc.
    e. Sioux Chief Manufacturing Company, Inc.
    f. Smith, Jay R. Mfg. Co.; Division of Smith Industries, Inc.
    g. Tyler Pipe; Wade Div.
    h. Watts Drainage Products Inc.
    i. Zurn Plumbing Products Group; Specification Drainage Operation.

2. Standard: ASSE 1010 or PDI-WH 201.
3. Type: Metal bellows or copper tube with piston.
4. Size: ASSE 1010, Sizes AA and A through F or PDI-WH 201, Sizes A through F.

2.11 TRAP-SEAL PRIMER VALVES

A. Supply-Type, Trap-Seal Primer Valves:

1. Available Manufacturers: Subject to compliance with requirements, manufacturers offering products that may be incorporated into the Work include, but are not limited to, the following:
2. Manufacturers: Subject to compliance with requirements, provide products by one of the following:

    a. MIFAB, Inc.
    b. PPP Inc.
    c. Sioux Chief Manufacturing Company, Inc.
    d. Smith, Jay R. Mfg. Co.; Division of Smith Industries, Inc.
    e. Watts Industries, Inc.; Water Products Div.

3. Standard: ASSE 1018.
4. Pressure Rating: 125 psig (860 kPa) minimum.
5. Body: Bronze.
6. Inlet and Outlet Connections: NPS 1/2 (DN 15) threaded, union, or solder joint.
7. Gravity Drain Outlet Connection: NPS 1/2 (DN 15) threaded or solder joint.
8. Finish: Chrome plated, or rough bronze for units used with pipe or tube that is not chrome finished.

PART 3 - EXECUTION

3.1 INSTALLATION

A. Refer to Division 22 Section "Common Work Results for Plumbing" for piping joining materials, joint construction, and basic installation requirements.

B. Install backflow preventers in each water supply to mechanical equipment and systems and to other equipment and water systems that may be sources of contamination. Comply with authorities having jurisdiction.

1. Locate backflow preventers in same room as connected equipment or system.
2. Install drain for backflow preventers with atmospheric-vent drain connection with air-gap fitting, fixed air-gap fitting, or equivalent positive pipe separation of at least two pipe diameters in drain piping and pipe to floor drain. Locate air-gap device attached to or under backflow preventer. Simple air breaks are not acceptable for this application.
3. Do not install bypass piping around backflow preventers.
4. RPZ Type backflow preventors must be installed above grade and may NOT be installed in underground vault boxes.

C. Install water regulators with inlet and outlet shutoff valves and bypass with memory-stop balancing valve. Install pressure gages on inlet and outlet.

D. Install balancing valves in locations where they can easily be adjusted.

E. Install temperature-actuated water mixing valves with check stops or shutoff valves on inlets and with shutoff valve on outlet.

1. Install thermometers and water regulators if specified.

F. Install Y-pattern strainers for water on supply side of each control valve, water pressure-reducing valve, solenoid valve, and pump.

G. Install water hammer arresters in water piping according to PDI-WH 201.

H. Install supply-type, trap-seal primer valves with outlet piping pitched down toward drain trap a minimum of 1 percent, and connect to floor-drain body, trap, or inlet fitting. Adjust valve for proper flow.

I. Piping installation requirements are specified in other Division 22 Sections. Drawings indicate general arrangement of piping and specialties.

J. Equipment Nameplates and Signs: Install engraved plastic-laminate equipment nameplate or sign on or near each of the following:

1. Intermediate atmospheric-vent backflow preventers.
2. Reduced-pressure-principle backflow preventers.
3. Double-check backflow-prevention assemblies.
4. Water pressure-reducing valves.
5. Primary, thermostatic, water mixing valves.
6. Supply-type, trap-seal primer valves.

K. Distinguish among multiple units, inform operator of operational requirements, indicate safety and emergency precautions, and warn of hazards and improper operations, in addition to identifying unit.

3.2 FIELD QUALITY CONTROL

A. Perform the following tests and prepare test reports:

1. Test each reduced-pressure-principle backflow preventer and double-check backflow-prevention assembly according to authorities having jurisdiction and the device's reference standard.

B. Remove and replace malfunctioning domestic water piping specialties and retest as specified above.

3.3 ADJUSTING

A. Set field-adjustable pressure set points of water pressure-reducing valves.

B. Set field-adjustable flow of balancing valves.

C. Set field-adjustable temperature set points of temperature-actuated water mixing valves.

END OF SECTION 221119

SECTION 221316 - SANITARY WASTE AND VENT PIPING

PART 1 - GENERAL

1.1 SUMMARY

A. This Section includes the following soil and waste, sanitary drainage and vent piping inside the building:

1. Pipe, tube, and fittings.
2. Special pipe fittings.

1.2 PERFORMANCE REQUIREMENTS

A. Components and installation shall be capable of withstanding the following minimum working pressure, unless otherwise indicated:

1. Soil, Waste, and Vent Piping: **10-foot head of water (30 kPa)**.

1.3 QUALITY ASSURANCE

A. Piping materials shall bear label, stamp, or other markings of specified testing agency.

B. Comply with NSF 14, "Plastics Piping Systems Components and Related Materials," for plastic piping components. Include marking with "NSF-dwv" for plastic drain, waste, and vent piping; and "NSF-drain" for plastic drain piping.

PART 2 - PRODUCTS

2.1 PIPING MATERIALS

A. Hub-and-Spigot, Cast-Iron Pipe and Fittings: ASTM A 74, Service class. All pipe and fittings shall be marked with the collective trademark of the Cast Iron Soil Pipe Institute ® and listed by NSF® International.

1. Gaskets: ASTM C 564, rubber.

B. Hubless Cast-Iron Pipe and Fittings: ASTM A 888 or CISPI 301. All pipe and fittings shall be marked with the collective trademark of the Cast Iron Soil Pipe Institute ® and listed by NSF® International.

1. Sovent Stack Fittings: ASME B16.45 or ASSE 1043, hubless, cast-iron aerator and deaerator drainage fittings.

2. Shielded Couplings: ASTM C 1277 assembly of metal shield or housing, corrosion-resistant fasteners, and rubber sleeve with integral, center pipe stop.

   a. Standard, Shielded, Stainless-Steel Couplings: CISPI 310, with stainless-steel corrugated shield; stainless-steel bands and tightening devices; and ASTM C 564, rubber sleeve.
   b. Heavy-Duty, Shielded, Stainless-Steel Couplings: With stainless-steel shield, stainless-steel bands and tightening devices, and ASTM C 564, rubber sleeve.
   c. Acceptable coupling manufacturers are Clamp-All, Husky, Mission, or ~~approved equals~~.

C. Acceptable cast iron manufacturers are AB&I Foundry, Charlotte Pipe & Foundry, and Tyler Pipe. No others will be accepted.

D. Solid-Wall PVC Pipe: ASTM D 2665, solid-wall drain, waste, and vent.

1. PVC Socket Fittings: ASTM D 2665, socket type, made to ASTM D 3311, drain, waste, and vent patterns.
2. Solvent Cement and Adhesive Primer:

   a. Use PVC solvent cement that has a VOC content of 510 g/L or less when calculated according to 40 CFR 59, Subpart D (EPA Method 24).
   b. Use adhesive primer that has a VOC content of 550 g/L or less when calculated according to 40 CFR 59, Subpart D (EPA Method 24).

PART 3 - EXECUTION

3.1 PIPING APPLICATIONS

A. Flanges and unions may be used on aboveground pressure piping, unless otherwise indicated.

B. See drawing plans and/or schedules for the locations in which each pipe material is to be used. Note that not all piping materials may be used on the project.

3.2 PIPING INSTALLATION

A. Basic piping installation requirements are specified in Division 22 Section "Common Work Results for Plumbing."

B. Install cleanouts at grade and extend to where building sanitary drains connect to building sanitary sewers.

C. Install cast-iron sleeve with water stop and mechanical sleeve seal at each service pipe penetration through foundation wall. Select number of interlocking rubber links required to make installation watertight. Sleeves and mechanical sleeve seals are specified in Division 22 Section "Common Work Results for Plumbing."

D. Install wall penetration system at each service pipe penetration through foundation wall. Make installation watertight. Wall penetration systems are specified in Division 22 Section "Common Work Results for Plumbing."

E. Install cast-iron soil piping according to CISPI's "Cast Iron Soil Pipe and Fittings Handbook," Chapter IV, "Installation of Cast Iron Soil Pipe and Fittings."

F. Make changes in direction for soil and waste drainage and vent piping using appropriate branches, bends, and long-sweep bends. Sanitary tees and short-sweep 1/4 bends may be used on vertical stacks if change in direction of flow is from horizontal to vertical. Use long-turn, double Y-branch and 1/8-bend fittings if 2 fixtures are installed back to back or side by side with common drain pipe. Straight tees, elbows, and crosses may be used on vent lines. Do not change direction of flow more than 90 degrees. Use proper size of standard increasers and reducers if pipes of different sizes are connected. Reducing size of drainage piping in direction of flow is prohibited.

G. Lay buried building drainage piping beginning at low point of each system. Install true to grades and alignment indicated, with unbroken continuity of invert. Place hub ends of piping upstream. Install required gaskets according to manufacturer's written instructions for use of lubricants, cements, and other installation requirements. Maintain swab in piping and pull past each joint as completed.

H. Install soil and waste drainage and vent piping at the following minimum slopes, unless otherwise indicated:

1. Building Sanitary Drain: 2 percent downward in direction of flow for piping NPS 3 (DN 80) and smaller; 1 percent downward in direction of flow for piping NPS 4 (DN 100) and larger.
2. Horizontal Sanitary Drainage Piping: 2 percent downward in direction of flow.
3. Vent Piping: 1 percent down toward vertical fixture vent or toward vent stack.

I. Sleeves are not required for cast-iron soil piping passing through concrete slabs-on-grade if slab is without membrane waterproofing.

J. Install PVC soil and waste drainage and vent piping according to ASTM D 2665.

K. Install underground PVC soil and waste drainage piping according to ASTM D 2321.

L. Do not enclose, cover, or put piping into operation until it is inspected and approved by authorities having jurisdiction.

3.3 JOINT CONSTRUCTION

A. Cast-Iron, Soil-Piping Joints: Make joints according to CISPI's "Cast Iron Soil Pipe and Fittings Handbook," Chapter IV, "Installation of Cast Iron Soil Pipe and Fittings."

1. Gasketed Joints: Make with rubber gasket matching class of pipe and fittings.
2. Hubless Joints: Make with rubber gasket and sleeve or clamp.

B. Soldered Joints: Use ASTM B 813, water-flushable, lead-free flux; ASTM B 32, lead-free-alloy solder; and ASTM B 828 procedure, unless otherwise indicated.

C. PVC Nonpressure Piping Joints: Join piping according to ASTM D 2665.

3.4 VALVE INSTALLATION

A. General-duty valves are specified in Division 22 Section "General-Duty Valves for Plumbing Piping."

B. Shutoff Valves: Install shutoff valve on each sewage pump discharge.

1. Use gate or full-port ball valve for piping NPS 2 (DN 50) and smaller.
2. Use gate valve for piping NPS 2-1/2 (DN 65) and larger.

C. Check Valves: Install swing check valve, downstream from shutoff valve, on each sewage pump discharge.

D. Backwater Valves: Install backwater valves in piping subject to sewage backflow.

1. Horizontal Piping: Horizontal backwater valves. Use normally closed type, unless otherwise indicated.
2. Floor Drains: Drain outlet backwater valves, unless drain has integral backwater valve.
3. Install backwater valves in accessible locations.
4. Backwater valves are specified in Division 22 Section "Sanitary Waste Piping Specialties."

3.5 HANGER AND SUPPORT INSTALLATION

A. Seismic-restraint devices are specified in Division 22 Section "Vibration and Seismic Controls for Plumbing Piping and Equipment."

B. Pipe hangers and supports are specified in Division 22 Section "Hangers and Supports for Plumbing Piping and Equipment." Install the following:

1. Vertical Piping: MSS Type 8 or Type 42, clamps.
2. Individual, Straight, Horizontal Piping Runs: According to the following:

   a. 100 Feet (30 m) and Less: MSS Type 1, adjustable, steel clevis hangers.
   b. Longer Than 100 Feet (30 m): MSS Type 43, adjustable roller hangers.
   c. Longer Than 100 Feet (30 m), if Indicated: MSS Type 49, spring cushion rolls.

3. Multiple, Straight, Horizontal Piping Runs 100 Feet (30 m) or Longer: MSS Type 44, pipe rolls. Support pipe rolls on trapeze.
4. Base of Vertical Piping: MSS Type 52, spring hangers.

C. Install supports according to Division 22 Section "Hangers and Supports for Plumbing Piping and Equipment."

D. Support vertical piping and tubing at base and at each floor.

E. Rod diameter may be reduced 1 size for double-rod hangers, with 3/8-inch (10-mm) minimum rods.

F. Install hangers for cast-iron soil piping with the following maximum horizontal spacing and minimum rod diameters:

1. NPS 1-1/2 and NPS 2 (DN 40 and DN 50): 60 inches (1500 mm) with 3/8-inch (10-mm) rod.
2. NPS 3 (DN 80): 60 inches (1500 mm) with 1/2-inch (13-mm) rod.
3. NPS 4 and NPS 5 (DN 100 and DN 125): 60 inches (1500 mm) with 5/8-inch (16-mm) rod.
4. NPS 6 (DN 150): 60 inches (1500 mm) with 3/4-inch (19-mm) rod.
5. Spacing for 10-foot (3-m) lengths may be increased to 10 feet (3 m). Spacing for fittings is limited to 60 inches (1500 mm).

G. Install supports for vertical cast-iron soil piping every 15 feet (4.5 m).

H. Install hangers for PVC piping with the following maximum horizontal spacing and minimum rod diameters:

1. NPS 1-1/2 and NPS 2 (DN 40 and DN 50): 48 inches (1200 mm) with 3/8-inch (10-mm) rod.
2. NPS 3 (DN 80): 48 inches (1200 mm) with 1/2-inch (13-mm) rod.
3. NPS 4 and NPS 5 (DN 100 and DN 125): 48 inches (1200 mm) with 5/8-inch (16-mm) rod.
4. NPS 6 (DN 150): 48 inches (1200 mm) with 3/4-inch (19-mm) rod.

I. Install supports for vertical PVC piping every 48 inches (1200 mm).

J. Support piping and tubing not listed above according to MSS SP-69 and manufacturer's written instructions.

3.6 CONNECTIONS

A. Connect soil and waste piping to exterior sanitary sewerage piping. Use transition fitting to join dissimilar piping materials.

B. Connect drainage and vent piping to the following:

1. Plumbing Fixtures: Connect drainage piping in sizes indicated, but not smaller than required by plumbing code.
2. Plumbing Fixtures and Equipment: Connect atmospheric vent piping in sizes indicated, but not smaller than required by authorities having jurisdiction.
3. Plumbing Specialties: Connect drainage and vent piping in sizes indicated, but not smaller than required by plumbing code.
4. Equipment: Connect drainage piping as indicated. Provide shutoff valve, if indicated, and union for each connection. Use flanges instead of unions for connections NPS 2-1/2 (DN 65) and larger.

3.7 FIELD QUALITY CONTROL

A. During installation, notify authorities having jurisdiction at least 24 hours before inspection must be made. Perform tests specified below in presence of authorities having jurisdiction.

1. Roughing-in Inspection: Arrange for inspection of piping before concealing or closing-in after roughing-in and before setting fixtures.
2. Final Inspection: Arrange for final inspection by authorities having jurisdiction to observe tests specified below and to ensure compliance with requirements.

B. Reinspection: If authorities having jurisdiction find that piping will not pass test or inspection, make required corrections and arrange for reinspection.

C. Reports: Prepare inspection reports and have them signed by authorities having jurisdiction.

D. Test sanitary drainage and vent piping according to procedures of authorities having jurisdiction.

1. Repair leaks and defects with new materials and retest piping, or portion thereof, until satisfactory results are obtained.
2. Prepare reports for tests and required corrective action.

3.8 CLEANING

A. Clean interior of piping. Remove dirt and debris as work progresses.

B. Protect drains during remainder of construction period to avoid clogging with dirt and debris and to prevent damage from traffic and construction work.

C. Place plugs in ends of uncompleted piping at end of day and when work stops.

3.9 PROTECTION

A. Exposed PVC Piping: Protect plumbing vents exposed to sunlight with two coats of water-based latex paint.

END OF SECTION 221316

SECTION 221319 - SANITARY WASTE PIPING SPECIALTIES

PART 1 - GENERAL

1.1 SUMMARY

A. This Section includes the following sanitary drainage piping specialties:

1. Backwater valves.
2. Cleanouts.
3. Floor drains.
4. Roof flashing assemblies.
5. Miscellaneous sanitary drainage piping specialties.
6. Flashing materials.
7. Grease interceptors.

1.2 SUBMITTALS

A. Product Data: For each type of product indicated. Include rated capacities, operating characteristics, and accessories for grease interceptors.

1.3 QUALITY ASSURANCE

A. Drainage piping specialties shall bear label, stamp, or other markings of specified testing agency.

PART 2 - PRODUCTS

2.1 BACKWATER VALVES

A. Horizontal, Cast-Iron Backwater Valves:

1. Available Manufacturers: Subject to compliance with requirements, manufacturers offering products that may be incorporated into the Work include, but are not limited to, the following:

    a. Josam Company; Josam Div.
    b. MIFAB, Inc.
    c. Smith, Jay R. Mfr. Co.; Division of Smith Industries, Inc.
    d. Tyler Pipe; Wade Div.
    e. Watts Drainage Products Inc.
    f. Zurn Plumbing Products Group; Specification Drainage Operation.

2. Standard: ASME A112.14.1.
3. Size: Same as connected piping.

4. Body: Cast iron.
5. Cover: Cast iron with bolted access check valve.
6. End Connections: Hub and spigot or hubless.
7. Type Check Valve: Removable, bronze, swing check, factory assembled or field modified to hang closed.
8. Extension: ASTM A 74, Service class; full-size, cast-iron, soil-pipe extension to field-installed cleanout at floor; replaces backwater valve cover.

B. Drain-Outlet Backwater Valves:

1. Available Manufacturers: Subject to compliance with requirements, manufacturers offering products that may be incorporated into the Work include, but are not limited to, the following:
2. Manufacturers: Subject to compliance with requirements, provide products by one of the following:

   a. Josam Company; Josam Div.
   b. Smith, Jay R. Mfr. Co.; Division of Smith Industries, Inc.
   c. Watts Drainage Products Inc.
   d. Zurn Plumbing Products Group; Specification Drainage Operation.

3. Size: Same as floor drain outlet.
4. Body: Cast iron or bronze made for vertical installation in bottom outlet of floor drain.
5. Check Valve: Removable ball float.
6. Inlet: Threaded.
7. Outlet: Threaded or spigot.

2.2 CLEANOUTS

A. Exposed Cleanouts:

1. Available Manufacturers: Subject to compliance with requirements, manufacturers offering products that may be incorporated into the Work include, but are not limited to, the following:

   a. Josam Company; Josam Div.
   b. MIFAB, Inc.
   c. Smith, Jay R. Mfg. Co.; Division of Smith Industries, Inc.
   d. Tyler Pipe; Wade Div.
   e. Watts Drainage Products Inc.
   f. Zurn Plumbing Products Group; Specification Drainage Operation.

2. Standard: ASME A112.36.2M for cast iron for cleanout test tee.
3. Size: Same as connected drainage piping
4. Body Material: As required to match connected piping.
5. Closure: Countersunk, cast-iron, plug.
6. Closure Plug Size: Same as or not more than one size smaller than cleanout size.

B. Cast-Iron Floor Cleanouts:

1. Available Manufacturers: Subject to compliance with requirements, manufacturers offering products that may be incorporated into the Work include, but are not limited to, the following:

    a. Josam Company; Josam Div.
    b. Oatey.
    c. Sioux Chief Manufacturing Company, Inc.
    d. Smith, Jay R. Mfg. Co.; Division of Smith Industries, Inc.
    e. Tyler Pipe; Wade Div.
    f. Watts Drainage Products Inc.
    g. Zurn Plumbing Products Group; Light Commercial Operation.
    h. Zurn Plumbing Products Group; Specification Drainage Operation.

2. Standard: ASME A112.36.2M for heavy-duty, adjustable housing cleanout.
3. Size: Same as connected branch.
4. Type: Heavy-duty, adjustable housing.
5. Body or Ferrule: Cast iron or same material as connected piping.
6. Clamping Device: Required for above grade installations.
7. Closure: Brass plug with tapered threads or cast-iron plug. Plastic plug may be used of PVC cleanouts.
8. Frame and Cover Material and Finish: Nickel-bronze, copper alloy.
9. Frame and Cover Shape: Round.
10. Riser: ASTM A 74, Extra-Heavy class, cast-iron drainage pipe fitting and riser to cleanout.

C. Wall Cleanouts:

1. Available Manufacturers: Subject to compliance with requirements, manufacturers offering products that may be incorporated into the Work include, but are not limited to, the following:

    a. Josam Company; Josam Div.
    b. MIFAB, Inc.
    c. Smith, Jay R. Mfg. Co.; Division of Smith Industries, Inc.
    d. Tyler Pipe; Wade Div.
    e. Watts Drainage Products Inc.
    f. Zurn Plumbing Products Group; Specification Drainage Operation.

2. Standard: ASME A112.36.2M. Include wall access.
3. Size: Same as connected drainage piping.
4. Body: as required to match connected piping.
5. Closure: Countersunk, brass plug.
6. Closure Plug Size: Same as or not more than one size smaller than cleanout size.
7. Wall Access: Round, flat, chrome-plated brass or stainless-steel cover plate with screw.
8. Wall Access: Round, nickel-bronze, copper-alloy, or stainless-steel wall-installation frame and cover.

2.3 FLOOR DRAINS

A. Floor drains shall be as scheduled on the drawings.

2.4 ROOF FLASHING ASSEMBLIES

A. Roof Flashing Assemblies:

1. Available Manufacturers: Subject to compliance with requirements, manufacturers offering products that may be incorporated into the Work include, but are not limited to, the following:

   a. Acorn Engineering Company; Elmdor/Stoneman Div.
   b. Thaler Metal Industries Ltd.

B. Description: Manufactured assembly made of **6.0-lb/sq. ft. (30-kg/sq. m)**, **0.0938-inch- (2.4-mm-)**] thick, lead flashing collar and skirt extending at least **10 inches (250 mm)** from pipe, with galvanized-steel boot reinforcement and counterflashing fitting.

1. Open-Top Vent Cap: Without cap.
2. Low-Silhouette Vent Cap: With vandal-proof vent cap.
3. Extended Vent Cap: With field-installed, vandal-proof vent cap.

2.5 MISCELLANEOUS SANITARY DRAINAGE PIPING SPECIALTIES

A. Open Drains:

1. Description: Shop or field fabricate from ASTM A 74, Service class, hub-and-spigot, cast-iron, soil-pipe fittings. Include P-trap, hub-and-spigot riser section; and where required, increaser fitting joined with ASTM C 564, rubber gaskets.
2. Size: Same as connected waste piping **with increaser fitting of size indicated**.

B. Deep-Seal Traps:

1. Description: Cast-iron or bronze casting, with inlet and outlet matching connected piping and cleanout trap-seal primer valve connection.
2. Size: Same as connected waste piping.

   a. NPS 2 (DN 50): 4-inch- (100-mm-) minimum water seal.
   b. NPS 2-1/2 (DN 65) and Larger: 5-inch- (125-mm-) minimum water seal.

C. Floor-Drain, Trap-Seal Primer Fittings:

1. Description: Cast iron, with threaded inlet and threaded or spigot outlet, and trap-seal primer valve connection.
2. Size: Same as floor drain outlet with NPS 1/2 (DN 15) side inlet.

D. Air-Gap Fittings:

1. Standard: ASME A112.1.2, for fitting designed to ensure fixed, positive air gap between installed inlet and outlet piping.
2. Body: Bronze or cast iron.
3. Inlet: Opening in top of body.
4. Outlet: Larger than inlet.

5. Size: Same as connected waste piping and with inlet large enough for associated indirect waste piping.

E. Sleeve Flashing Device:

1. Description: Manufactured, cast-iron fitting, with clamping device, that forms sleeve for pipe floor penetrations of floor membrane. Include galvanized-steel pipe extension in top of fitting that will extend [**1 inch (25 mm)**] [**2 inches (51 mm)**] above finished floor and galvanized-steel pipe extension in bottom of fitting that will extend through floor slab.
2. Size: As required for close fit to riser or stack piping.

F. Stack Flashing Fittings:

1. Description: Counterflashing-type, cast-iron fitting, with bottom recess for terminating roof membrane, and with threaded or hub top for extending vent pipe.
2. Size: Same as connected stack vent or vent stack.

G. Vent Caps:

1. Description: Cast-iron body with threaded or hub inlet and vandal-proof design. Include vented hood and setscrews to secure to vent pipe.
2. Size: Same as connected stack vent or vent stack.

2.6 FLASHING MATERIALS

A. Lead Sheet: ASTM B 749, Type L51121, copper bearing, with the following minimum weights and thicknesses, unless otherwise indicated:

1. General Use: 4.0-lb/sq. ft. (20-kg/sq. m), 0.0625-inch (1.6-mm) thickness.
2. Vent Pipe Flashing: 3.0-lb/sq. ft. (15-kg/sq. m), 0.0469-inch (1.2-mm) thickness.
3. Burning: 6-lb/sq. ft. (30-kg/sq. m), 0.0938-inch (2.4-mm) thickness.

B. Fasteners: Metal compatible with material and substrate being fastened.

C. Metal Accessories: Sheet metal strips, clamps, anchoring devices, and similar accessory units required for installation; matching or compatible with material being installed.

D. Solder: ASTM B 32, lead-free alloy.

E. Bituminous Coating: SSPC-Paint 12, solvent-type, bituminous mastic.

2.7 POINT OF USE GREASE INTERCEPTORS

A. Grease Interceptors:

1. Available Manufacturers: Subject to compliance with requirements, manufacturers offering products that may be incorporated into the Work include, but are not limited to, the following:

a. Josam Company; Josam Div.

b. MIFAB, Inc.
c. Schier Products Company.
d. Smith, Jay R. Mfg. Co.; Division of Smith Industries, Inc.
e. Tyler Pipe; Wade Div.
f. Watts Drainage Products Inc.
g. Zurn Plumbing Products Group

2. Standard: ASME A112.14.3 and PDI-G101, for intercepting and retaining fats, oils, and greases from food-preparation or -processing wastewater.
3. Plumbing and Drainage Institute Seal: Required.
4. Body Material: Cast iron or steel; Plastic allowed if not subject to impact.
5. Cleanout: Integral or field installed on outlet.
6. Flow-Control Fitting: Required unless included with sink.
7. See drawing details and schedule for flow rate, capacity, inlet and outlet sizes, and installation requirements.

PART 3 - EXECUTION

3.1 INSTALLATION

A. Refer to Division 22 Section "Common Work Results for Plumbing" for piping joining materials, joint construction, and basic installation requirements.

B. Install backwater valves in building drain piping. For interior installation, provide cleanout deck plate flush with floor and centered over backwater valve cover, and of adequate size to remove valve cover for servicing.

C. Install cleanouts in aboveground piping and building drain piping according to the following, unless otherwise indicated:

1. Size same as drainage piping up to NPS 4 (DN 100). Use NPS 4 (DN 100) for larger drainage piping unless larger cleanout is indicated.
2. Locate at each change in direction of piping greater than 45 degrees.
3. Locate at minimum intervals of 50 feet (15 m) for piping NPS 4 (DN 100) and smaller and 100 feet (30 m) for larger piping.
4. Locate at base of each vertical soil and waste stack.

D. For floor cleanouts for piping below floors, install cleanout deck plates with top flush with finished floor.

E. For cleanouts located in concealed piping, install cleanout wall access covers, of types indicated, with frame and cover flush with finished wall.

F. Install floor drains at low points of surface areas to be drained. Set grates of drains flush with finished floor, unless otherwise indicated.

1. Position floor drains for easy access and maintenance.
2. Set floor drains below elevation of surrounding finished floor to allow floor drainage. Set with grates depressed according to the following drainage area radii:

a. Radius, 30 Inches (750 mm) or Less: Equivalent to 1 percent slope, but not less than 1/4-inch (6.35-mm) total depression.
b. Radius, 30 to 60 Inches (750 to 1500 mm): Equivalent to 1 percent slope.
c. Radius, 60 Inches (1500 mm) or Larger: Equivalent to 1 percent slope, but not greater than 1-inch (25-mm) total depression.

3. Install floor-drain flashing collar or flange so no leakage occurs between drain and adjoining flooring. Maintain integrity of waterproof membranes where penetrated.
4. Install individual traps for floor drains connected to sanitary building drain, unless otherwise indicated.

G. Install roof flashing assemblies on sanitary stack vents and vent stacks that extend through roof.

H. Install flashing fittings on sanitary stack vents and vent stacks that extend through roof.

I. Assemble open drain fittings and install with top of hub **1 inch (25 mm)** above floor.

J. Install deep-seal traps on floor drains and other waste outlets, if indicated.

K. Install floor-drain, trap-seal primer fittings on inlet to floor drains that require trap-seal primer connection.

1. Exception: Fitting may be omitted if trap has trap-seal primer connection.
2. Size: Same as floor drain inlet.

L. Install air-gap fittings on draining-type backflow preventers and on indirect-waste piping discharge into sanitary drainage system.

M. Install sleeve flashing device with each riser and stack passing through floors with waterproof membrane.

N. Install vent caps on each vent pipe passing through roof.

O. Install grease interceptors, including trapping, venting, and flow-control fitting, according to authorities having jurisdiction and with clear space for servicing.

1. Above-Floor Installation: Set unit with bottom resting on floor, unless otherwise indicated.
2. Flush with Floor Installation: Set unit and extension, if required, with cover flush with finished floor.
3. Recessed Floor Installation: Set unit in receiver housing having bottom or cradle supports, with receiver housing cover flush with finished floor.
4. Install cleanout immediately downstream from interceptors not having integral cleanout on outlet.

P. Install traps on plumbing specialty drain outlets. Omit traps on indirect wastes unless trap is indicated.

Q. Install escutcheons at wall, floor, and ceiling penetrations in exposed finished locations and within cabinets and millwork. Use deep-pattern escutcheons if required to conceal protruding pipe fittings.

3.2 CONNECTIONS

A. Piping installation requirements are specified in other Division 22 Sections. Drawings indicate general arrangement of piping, fittings, and specialties.

B. Install piping adjacent to equipment to allow service and maintenance.

C. Grease Interceptors: Connect inlet and outlet to unit, and connect flow-control fitting and vent to unit inlet piping. Install valve on outlet of automatic drawoff-type unit.

3.3 FLASHING INSTALLATION

A. Fabricate flashing from single piece unless large pans, sumps, or other drainage shapes are required. Join flashing according to the following if required:

1. Lead Sheets: Burn joints of lead sheets 6.0-lb/sq. ft. (30-kg/sq. m), 0.0938-inch (2.4-mm) thickness or thicker. Solder joints of lead sheets 4.0-lb/sq. ft. (20-kg/sq. m), 0.0625-inch (1.6-mm) thickness or thinner.

B. Install sheet flashing on pipes, sleeves, and specialties passing through or embedded in floors and roofs with waterproof membrane.

1. Pipe Flashing: Sleeve type, matching pipe size, with minimum length of 10 inches (250 mm), and skirt or flange extending at least 8 inches (200 mm) around pipe.
2. Sleeve Flashing: Flat sheet, with skirt or flange extending at least 8 inches (200 mm) around sleeve.
3. Embedded Specialty Flashing: Flat sheet, with skirt or flange extending at least 8 inches (200 mm) around specialty.

C. Set flashing on floors and roofs in solid coating of bituminous cement.

D. Secure flashing into sleeve and specialty clamping ring or device.

E. Install flashing for piping passing through roofs with counterflashing or commercially made flashing fittings, according to Division 07 Section "Sheet Metal Flashing and Trim."

F. Extend flashing up vent pipe passing through roofs and turn down into pipe, or secure flashing into cast-iron sleeve having calking recess.

3.4 LABELING AND IDENTIFYING

A. Equipment Nameplates and Signs: Install engraved plastic-laminate equipment nameplate or sign on or near each grease interceptor.

B. Distinguish among multiple units, inform operator of operational requirements, indicate safety and emergency precautions, and warn of hazards and improper operations, in addition to identifying unit. Nameplates and signs are specified in Division 22 Section "Identification for Plumbing Piping and Equipment."

3.5 PROTECTION

A. Protect drains during remainder of construction period to avoid clogging with dirt or debris and to prevent damage from traffic or construction work.

B. Place plugs in ends of uncompleted piping at end of each day or when work stops.

END OF SECTION 221319

SECTION 221413 - STORM DRAINAGE PIPING

PART 1 - GENERAL

1.1 SUMMARY

A. This Section includes the following storm drainage piping inside the building.

1. Pipe, tube, and fittings.
2. Special pipe fittings.

1.2 PERFORMANCE REQUIREMENTS

A. Components and installation shall be capable of withstanding the following minimum working pressure, unless otherwise indicated:

1. Storm Drainage Piping: **10-foot head of water (30 kPa)**.

1.3 QUALITY ASSURANCE

A. Piping materials shall bear label, stamp, or other markings of specified testing agency.

B. Comply with NSF 14, "Plastics Piping Systems Components and Related Materials," for plastic piping components. Include marking with "NSF-drain" for plastic drain piping.

PART 2 - PRODUCTS

2.1 PIPING MATERIALS

A. Hub-and-Spigot, Cast-Iron Pipe and Fittings: ASTM A 74, Service class.

1. Gaskets: ASTM C 564, rubber.

B. Hubless Cast-Iron Pipe and Fittings: ASTM A 888 or CISPI 301.

1. Shielded Couplings: ASTM C 1277 assembly of metal shield or housing, corrosion-resistant fasteners, and rubber sleeve with integral, center pipe stop.

a. Standard, Shielded, Stainless-Steel Couplings: CISPI 310, with stainless-steel corrugated shield; stainless-steel bands and tightening devices; and ASTM C 564, rubber sleeve.
b. Heavy-Duty, Shielded, Stainless-Steel Couplings: With stainless-steel shield, stainless-steel bands and tightening devices, and ASTM C 564, rubber sleeve.

C. Solid-Wall PVC Pipe: ASTM D 2665, solid-wall drain, waste, and vent.

1. PVC Socket Fittings: ASTM D 2665, made to ASTM D 3311, drain, waste, and vent patterns.
2. Solvent Cement and Adhesive Primer:

    a. Use PVC solvent cement that has a VOC content of 510 g/L or less when calculated according to 40 CFR 59, Subpart D (EPA Method 24).
    b. Use adhesive primer that has a VOC content of 550 g/L or less when calculated according to 40 CFR 59, Subpart D (EPA Method 24).

PART 3 - EXECUTION

3.1 PIPING APPLICATIONS

A. See drawing plans and/or schedules for the locations in which each pipe material is to be used. Note that not all piping materials may be used on the project.

3.2 PIPING INSTALLATION

A. Storm sewer and drainage piping outside the building are specified in Division 33 Section "Storm Utility Drainage Piping."

B. Basic piping installation requirements are specified in Division 22 Section "Common Work Results for Plumbing."

C. Install cleanouts at grade and extend to where building storm drains connect to building storm sewers. Cleanouts are specified in Division 22 Section "Storm Drainage Piping Specialties."

D. Install cast-iron sleeve with water stop and mechanical sleeve seal at each service pipe penetration through foundation wall. Select number of interlocking rubber links required to make installation watertight. Sleeves and mechanical sleeve seals are specified in Division 22 Section "Common Work Results for Plumbing."

E. Install wall-penetration-fitting system at each service pipe penetration through foundation wall. Make installation watertight.

F. Install cast-iron soil piping according to CISPI's "Cast Iron Soil Pipe and Fittings Handbook," Chapter IV, "Installation of Cast Iron Soil Pipe and Fittings."

G. Make changes in direction for storm piping using appropriate branches, bends, and long-sweep bends. Do not change direction of flow more than 90 degrees. Use proper size of standard increasers and reducers if pipes of different sizes are connected. Reducing size of drainage piping in direction of flow is prohibited.

H. Lay buried building drain piping beginning at low point of each system. Install true to grades and alignment indicated, with unbroken continuity of invert. Place hub ends of piping upstream. Install required gaskets according to manufacturer's written instructions for use of lubricants, cements, and other installation requirements. Maintain swab in piping and pull past each joint as completed.

I. Install storm drainage piping at the following minimum slopes, unless otherwise indicated:

1. Building Storm Drain: 1 percent downward in direction of flow for piping NPS 3 (DN 80) and smaller; 1 percent downward in direction of flow for piping NPS 4 (DN 100) and larger.
2. Horizontal Storm-Drainage Piping: 2 percent downward in direction of flow.

J. Sleeves are not required for cast-iron soil piping passing through concrete slabs-on-grade if slab is without membrane waterproofing.

K. Install PVC storm drainage piping according to ASTM D 2665.

L. Install underground PVC storm drainage piping according to ASTM D 2321.

M. Do not enclose, cover, or put piping into operation until it is inspected and approved by authorities having jurisdiction.

3.3 JOINT CONSTRUCTION

A. Basic piping joint construction requirements are specified in Division 22 Section "Common Work Results for Plumbing."

B. Hub-and-Spigot, Cast-Iron Soil Piping Gasketed Joints: Join according to CISPI's "Cast Iron Soil Pipe and Fittings Handbook" for compression joints.

C. Hubless Cast-Iron Soil Piping Coupled Joints: Join according to CISPI 310 and CISPI's "Cast Iron Soil Pipe and Fittings Handbook" for hubless-coupling joints.

D. Soldered Joints: Use ASTM B 813, water-flushable, lead-free flux; ASTM B 32, lead-free-alloy solder; and ASTM B 828 procedure, unless otherwise indicated.

E. PVC Nonpressure Piping Joints: Join piping according to ASTM D 2665.

3.4 VALVE INSTALLATION

A. Backwater Valves: Install backwater valves in piping subject to backflow.

1. Horizontal Piping: Horizontal backwater valves. Use normally closed type, unless otherwise indicated.
2. Install backwater valves in accessible locations.
3. Backwater valve are specified in Division 22 Section "Storm Drainage Piping Specialties."

3.5 HANGER AND SUPPORT INSTALLATION

A. Pipe hangers and supports are specified in Division 22 Section "Hangers and Supports for Plumbing Piping and Equipment." Install the following:

1. Vertical Piping: MSS Type 8 or Type 42, clamps.

2. Individual, Straight, Horizontal Piping Runs: According to the following:

   a. 100 Feet (30 m) and Less: MSS Type 1, adjustable, steel clevis hangers.
   b. Longer Than 100 Feet (30 m): MSS Type 43, adjustable roller hangers.
   c. Longer Than 100 Feet (30 m), if Indicated: MSS Type 49, spring cushion rolls.

3. Multiple, Straight, Horizontal Piping Runs 100 Feet (30 m) or Longer: MSS Type 44, pipe rolls. Support pipe rolls on trapeze.
4. Base of Vertical Piping: MSS Type 52, spring hangers.

B. Install supports according to Division 22 Section "Hangers and Supports for Plumbing Piping and Equipment."

C. Support vertical piping and tubing at base and at each floor.

D. Rod diameter may be reduced 1 size for double-rod hangers, with 3/8-inch (10-mm) minimum rods.

E. Install hangers for cast-iron soil piping with the following maximum horizontal spacing and minimum rod diameters:

1. NPS 1-1/2 and NPS 2 (DN 40 and DN 50): 60 inches (1500 mm) with 3/8-inch (10-mm) rod.
2. NPS 3 (DN 80): 60 inches (1500 mm) with 1/2-inch (13-mm) rod.
3. NPS 4 and NPS 5 (DN 100 and DN 125): 60 inches (1500 mm) with 5/8-inch (16-mm) rod.
4. NPS 6 (DN 150): 60 inches (1500 mm) with 3/4-inch (19-mm) rod.
5. Spacing for 10-foot (3-m) lengths may be increased to 10 feet (3 m). Spacing for fittings is limited to 60 inches (1500 mm).

F. Install supports for vertical cast-iron soil piping every 15 feet (4.5 m).

G. Install hangers for PVC piping with the following maximum horizontal spacing and minimum rod diameters:

1. NPS 1-1/2 and NPS 2 (DN 40 and DN 50): 48 inches (1200 mm) with 3/8-inch (10-mm) rod.
2. NPS 3 (DN 80): 48 inches (1200 mm) with 1/2-inch (13-mm) rod.
3. NPS 4 and NPS 5 (DN 100 and DN 125): 48 inches (1200 mm) with 5/8-inch (16-mm) rod.
4. NPS 6 (DN 150): 48 inches (1200 mm) with 3/4-inch (19-mm) rod.

H. Install supports for vertical PVC piping every 48 inches (1200 mm).

I. Support piping and tubing not listed above according to MSS SP-69 and manufacturer's written instructions.

3.6 CONNECTIONS

A. Connect interior storm drainage piping to exterior storm drainage piping. Use transition fitting to join dissimilar piping materials.

B. Connect storm drainage piping to roof drains and storm drainage specialties.

3.7 FIELD QUALITY CONTROL

A. During installation, notify authorities having jurisdiction at least 24 hours before inspection must be made. Perform tests specified below in presence of authorities having jurisdiction.

1. Roughing-in Inspection: Arrange for inspection of piping before concealing or closing-in after roughing-in.
2. Final Inspection: Arrange for final inspection by authorities having jurisdiction to observe tests specified below and to ensure compliance with requirements.

B. Reinspection: If authorities having jurisdiction find that piping will not pass test or inspection, make required corrections and arrange for reinspection.

C. Reports: Prepare inspection reports and have them signed by authorities having jurisdiction.

D. Test storm drainage piping according to procedures of authorities having jurisdiction.

3.8 CLEANING

A. Clean interior of piping. Remove dirt and debris as work progresses.

B. Protect drains during remainder of construction period to avoid clogging with dirt and debris and to prevent damage from traffic and construction work.

C. Place plugs in ends of uncompleted piping at end of day and when work stops.

END OF SECTION 221413

SECTION 221423 - STORM DRAINAGE PIPING SPECIALTIES

PART 1 - GENERAL

1.1 SUMMARY

A. Section Includes:

1. Roof drains.
2. Miscellaneous storm drainage piping specialties.
3. Cleanouts.
4. Backwater valves.
5. Trench drains.
6. Flashing materials.

1.2 SUBMITTALS

A. Product Data: For each type of product indicated.

1.3 QUALITY ASSURANCE

A. Drainage piping specialties shall bear label, stamp, or other markings of specified testing agency.

PART 2 - PRODUCTS

2.1 ROOF DRAINS

A. Roof drains shall be as scheduled on drawings.

2.2 MISCELLANEOUS STORM DRAINAGE PIPING SPECIALTIES

A. Downspout Adaptors:

1. Description: Manufactured, gray-iron casting, for attaching to horizontal-outlet, parapet roof drain and to exterior, sheet metal downspout.
2. Size: Inlet size to match parapet drain outlet.

B. Downspout Boots:

1. Description: Manufactured, ASTM A 48/A 48M, gray-iron casting, with strap or ears for attaching to building; NPS 4 (DN 100) outlet; and shop-applied bituminous coating.
2. Size: Inlet size to match downspout and NPS 4 (DN 100) outlet.

C. Conductor Nozzles:

1. Description: Bronze body with threaded inlet and bronze wall flange with mounting holes.
2. Size: Same as connected conductor.

2.3 CLEANOUTS: See Section 221319 – Sanitary Waste Piping Specialities.

2.4 BACKWATER VALVES: See Section 221319 – Sanitary Waste Piping Specialities.

2.5 TRENCH DRAINS

A. Trench Drains shall be as scheduled on the drawings.

2.6 FLASHING MATERIALS

A. Copper Sheet: ASTM B 152/B 152M, 12 oz./sq. ft. (3.7 kg/sq. m or 0.41-mm thickness).

B. Zinc-Coated Steel Sheet: ASTM A 653/A 653M, with 0.20 percent copper content and 0.04-inch (1.01-mm) minimum thickness unless otherwise indicated. Include G90 (Z275) hot-dip galvanized, mill-phosphatized finish for painting if indicated.

C. Elastic Membrane Sheet: ASTM D 4068, flexible, chlorinated polyethylene, 40-mil (1.01-mm) minimum thickness.

D. Fasteners: Metal compatible with material and substrate being fastened.

E. Metal Accessories: Sheet metal strips, clamps, anchoring devices, and similar accessory units required for installation; matching or compatible with material being installed.

F. Solder: ASTM B 32, lead-free alloy.

PART 3 - EXECUTION

3.1 INSTALLATION

A. Install roof drains at low points of roof areas according to roof membrane manufacturer's written installation instructions. Roofing materials are specified in Division 07 Sections.

1. Install flashing collar or flange of roof drain to prevent leakage between drain and adjoining roofing. Maintain integrity of waterproof membranes where penetrated.
2. Install expansion joints, if indicated, in roof drain outlets.
3. Position roof drains for easy access and maintenance.

B. Install downspout adapters on outlet of back-outlet parapet roof drains and connect to sheet metal downspouts.

C. Install downspout boots at grade with top **12 inches (305 mm)** above grade. Secure to building wall.

D. Install conductor nozzles at exposed bottom of conductors where they spill onto grade.

E. Install cleanouts in aboveground piping and building drain piping according to the following instructions unless otherwise indicated:

1. Use cleanouts the same size as drainage piping up to NPS 4 (DN 100). Use NPS 4 (DN 100) for larger drainage piping unless larger cleanout is indicated.
2. Locate cleanouts at each change in direction of piping greater than 45 degrees.
3. Locate cleanouts at minimum intervals of 50 feet (15 m) for piping NPS 4 (DN 100) and smaller and 100 feet (30 m) for larger piping.
4. Locate cleanouts at base of each vertical soil and waste stack.

F. For floor cleanouts for piping below floors, install cleanout deck plates with top flush with finished floor.

G. For cleanouts located in concealed piping, install cleanout wall access covers, of types indicated, with frame and cover flush with finished wall.

H. Install horizontal backwater valves in floor with cover flush with floor.

I. Install test tees in vertical conductors and near floor.

J. Install wall cleanouts in vertical conductors. Install access door in wall if indicated.

K. Install trench drains at low points of surface areas to be drained. Set grates of drains flush with finished surface unless otherwise indicated.

L. Install sleeve flashing device with each conductor passing through floors with waterproof membrane.

3.2 CONNECTIONS

A. Comply with requirements for piping specified in Division 22 Sections. Drawings indicate general arrangement of piping, fittings, and specialties.

3.3 FLASHING INSTALLATION

A. Fabricate flashing from single piece of metal unless large pans, sumps, or other drainage shapes are required. Join flashing according to the following if required:

1. Lead Sheets: Burn joints of 6.0-lb/sq. ft. (30-kg/sq. m) lead sheets, 0.0938-inch (2.4-mm) thickness or thicker. Solder joints of 4.0-lb/sq. ft. (20-kg/sq. m) lead sheets, 0.0625-inch (1.6-mm) thickness or thinner.
2. Copper Sheets: Solder joints of copper sheets.

B. Install sheet flashing on pipes, sleeves, and specialties passing through or embedded in floors and roofs with waterproof membrane.

1. Pipe Flashing: Sleeve type, matching the pipe size, with a minimum length of 10 inches (250 mm) and with skirt or flange extending at least 8 inches (200 mm) around pipe.
2. Sleeve Flashing: Flat sheet, with skirt or flange extending at least 8 inches (200 mm) around sleeve.
3. Embedded Specialty Flashing: Flat sheet, with skirt or flange extending at least 8 inches (200 mm) around specialty.

C. Set flashing on floors and roofs in solid coating of bituminous cement.

D. Secure flashing into sleeve and specialty clamping ring or device.

E. Fabricate and install flashing and pans, sumps, and other drainage shapes.

3.4 PROTECTION

A. Protect drains during remainder of construction period to avoid clogging with dirt or debris and to prevent damage from traffic or construction work.

B. Place plugs in ends of uncompleted piping at end of each day or when work stops.

END OF SECTION 221423

SECTION 223300 - ELECTRIC DOMESTIC WATER HEATERS

PART 1 - GENERAL

1.1 SUMMARY

A. This Section includes the following:

1. Household, storage electric water heaters.
2. Light-commercial electric water heaters.
3. Commercial electric booster heaters.
4. Commercial, storage electric water heaters.
5. Water heater accessories.

1.2 SUBMITTALS

A. Product Data: For each type and size of water heater indicated on plans. Include rated capacities, operating characteristics, furnished specialties, accessories, and electrical requirements.

B. LEED Submittal:

1. Product Data for Prerequisite EA 2: Documentation indicating that units comply with ASHRAE/IESNA 90.1-2004, Section 7 - "Service Water Heating."

C. Shop Drawings: Diagram power, signal, and control wiring.

D. Operation and maintenance data.

E. Warranty.

1.3 QUALITY ASSURANCE

A. Electrical Components, Devices, and Accessories: Listed and labeled as defined in NFPA 70, Article 100, by a testing agency acceptable to authorities having jurisdiction, and marked for intended use.

B. ASHRAE/IESNA-90.1-2004 Compliance: Applicable requirements in ASHRAE/IESNA 90.1-2004.

C. ASME Compliance: Where ASME-code construction is indicated, fabricate and label commercial water heater storage tanks to comply with ASME Boiler and Pressure Vessel Code: Section VIII, Division 1.

D. Comply with NSF 61, "Drinking Water System Components - Health Effects; Sections 1 through 9" for all components that will be in contact with potable water.

1.4 WARRANTY

A. Special Warranty: Manufacturer's standard form in which manufacturer agrees to repair or replace components of electric water heaters that fail in materials or workmanship within specified warranty period.

1. Failures include, but are not limited to, the following:

   a. Structural failures including storage tank and supports.
   b. Faulty operation of controls.
   c. Deterioration of metals, metal finishes, and other materials beyond normal use.

2. Warranty Period(s): From date of Substantial Completion:

   a. Household Electric Water Heaters: Five years.
   b. Commercial Electric Water Heaters: Five years.

PART 2 - PRODUCTS

2.1 MANUFACTURERS

A. In other Part 2 articles where titles below introduce lists, the following requirements apply to product selection:

1. Manufacturers: Subject to compliance with requirements, provide products by one of the manufacturers specified.

2.2 HOUSEHOLD ELECTRIC WATER HEATERS

A. Household, standard or tabletop, Storage Electric Water Heaters: Comply with UL 174.

1. Available Manufacturers:

   a. American Water Heater Company.
   b. Bradford White Corporation.
   c. Lochinvar Corporation.
   d. Rheem Water Heater Div.; Rheem Manufacturing Company.
   e. Ruud Water Heater Div.; Rheem Manufacturing Company.
   f. Smith, A. O. Water Products Company.
   g. State Industries, Inc.

2. Storage-Tank Construction: Steel.

   a. Tappings: ASME B1.20.1 pipe thread.
   b. Pressure Rating: 150 psig (1035 kPa).
   c. Interior Finish: Comply with NSF 61 barrier materials for potable-water tank linings, including extending lining material into tappings. Unlined stainless steel tanks are not permitted.

3. Factory-Installed Storage-Tank Appurtenances:

a. Anode Rod: Replaceable magnesium.
b. Dip Tube: Provide unless cold-water inlet is near bottom of tank.
c. Drain Valve: ASSE 1005.
d. Insulation: Comply with ASHRAE/IESNA 90.1-2004 or ASHRAE 90.2-2004.
e. Jacket: Steel with enameled finish.

1) Standard: Cylindrical shape.
2) Tabletop: Rectangular shape, with flat-top work surface and raised back.

f. Heat Trap Fittings: Inlet type in cold-water inlet and outlet type in hot-water outlet.
g. Heating Elements: Two; electric, screw-in immersion type with 12 kW or less total, and wired for nonsimultaneous operation, unless otherwise indicated.
h. Temperature Control: Adjustable thermostat for each element.
i. Safety Control: High-temperature-limit cutoff device or system.
j. Relief Valve: ASME rated and stamped and complying with ASME PTC 25.3 for combination temperature and pressure relief valves. Include relieving capacity at least as great as heat input, and include pressure setting less than water heater working-pressure rating. Select relief valve with sensing element that extends into storage tank.

4. Capacity and Characteristics: See schedule on drawings.

2.3 LIGHT-COMMERCIAL ELECTRIC WATER HEATERS

A. Description: Comply with UL 174 for household, storage electric water heaters.

1. Available Manufacturers:

a. American Water Heater Company.
b. Bradford White Corporation.
c. Lochinvar Corporation.
d. Rheem Water Heater Div.; Rheem Manufacturing Company.
e. Ruud Water Heater Div.; Rheem Manufacturing Company.
f. Smith, A. O. Water Products Company.
g. State Industries, Inc.

2. Storage-Tank Construction: Steel, vertical arrangement.

a. Tappings: ASME B1.20.1 pipe thread.
b. Pressure Rating: 150 psig (1035 kPa).
c. Interior Finish: Comply with NSF 61 barrier materials for potable-water tank linings, including extending lining material into tappings. Unlined stainless steel tanks are not permitted.

3. Factory-Installed Storage-Tank Appurtenances:

a. Anode Rod: Replaceable magnesium.

b. Dip Tube: Provide unless cold-water inlet is near bottom of tank.
c. Drain Valve: ASSE 1005.
d. Insulation: Comply with ASHRAE/IESNA 90.1-2004 or ASHRAE 90.2-2004.
e. Jacket: Steel with enameled finish.
f. Heat Trap Fittings: Inlet type in cold-water inlet and outlet type in hot-water outlet.
g. Heating Elements: Two; electric, screw-in immersion type; wired for non-simultaneous operation, unless otherwise indicated.
h. Temperature Control: Adjustable thermostat for each element.
i. Safety Control: High-temperature-limit cutoff device or system.
j. Relief Valve: ASME rated and stamped and complying with ASME PTC 25.3 for combination temperature and pressure relief valves. Include relieving capacity at least as great as heat input, and include pressure setting less than water heater working-pressure rating. Select relief valve with sensing element that extends into storage tank.

4. Special Requirements: NSF 5 construction with legs for off-floor installation.
5. Capacity and Characteristics: See schedule on drawings.

B. Commercial, Storage Electric Water Heaters: Comply with UL 1453 requirements for storage-tank-type water heaters.

1. Available Manufacturers:

a. American Water Heater Company.
b. Bradford White Corporation.
c. Lochinvar Corporation.
d. PVI Industries, LLC.
e. Rheem Water Heater Div.; Rheem Manufacturing Company.
f. Ruud Water Heater Div.; Rheem Manufacturing Company.
g. Smith, A. O. Water Products Company.
h. State Industries, Inc.

2. Storage-Tank Construction: ASME-code, steel.

a. Tappings: Factory fabricated of materials compatible with tank and piping connections. Attach tappings to tank before testing.

1) NPS 2 (DN 50) and Smaller: Threaded ends according to ASME B1.20.1.
2) NPS 2-1/2 (DN 65) and Larger: Flanged ends according to ASME B16.5 for steel and stainless-steel flanges, and according to ASME B16.24 for copper and copper-alloy flanges.

b. Pressure Rating: **150 psig (1035 kPa)**
c. Interior Finish: Comply with NSF 61 barrier materials for potable-water tank linings, including extending lining material into tappings.

3. Factory-Installed Storage-Tank Appurtenances:

a. Anode Rod: Replaceable magnesium.
b. Drain Valve: Corrosion-resistant metal complying with ASSE 1005.

c. Insulation: Comply with ASHRAE/IESNA 90.1.
d. Jacket: Steel with enameled finish.
e. Heating Elements: Electric, screw-in or bolt-on immersion type arranged in multiples of three.

1) Staging: Input not exceeding 18 kW per step.

f. Temperature Control: Adjustable thermostat.
g. Safety Controls: High-temperature-limit and low-water cutoff devices or systems.
h. Relief Valves: ASME rated and stamped and complying with ASME PTC 25.3, for combination temperature and pressure relief valves. Include one or more relief valves with total relieving capacity at least as great as heat input, and include pressure setting less than water heater working-pressure rating. Select one relief valve with sensing element that extends into storage tank.

4. Special Requirements: NSF 5 construction.
5. Building Automation System Interface: Normally closed dry contacts for enabling and disabling water heater.
6. Capacity and Characteristics: See schedule on drawings.

2.4 WATER HEATER ACCESSORIES

A. Water Heater Stands: Water heater manufacturer's factory-fabricated steel stand for floor mounting and capable of supporting water heater and water. Include dimension that will support bottom of water heater a minimum of 18 inches (457 mm) above the floor.

B. Water Heater Mounting Brackets: Water heater manufacturer's factory-fabricated steel bracket for wall mounting and capable of supporting water heater and water.

C. Drain Pans: Corrosion-resistant metal with raised edge. Include dimensions not less than base of water heater and include drain outlet not less than NPS 3/4 (DN 20).

D. Piping-Type Heat Traps: Field-fabricated piping arrangement according to ASHRAE/IESNA 90.1-2004 or ASHRAE 90.2-2004.

E. Water Regulators: ASSE 1003, water-pressure reducing valve. Set at 25-psig- (172.5-kPa-) maximum outlet pressure, unless otherwise indicated.

F. Shock Absorbers: ASSE 1010 or PDI WH 201, Size A water hammer arrester.

PART 3 - EXECUTION

3.1 WATER HEATER INSTALLATION

A. Install commercial water heaters on concrete bases.

1. Exception: Omit concrete bases for commercial water heaters if installation on stand, bracket, suspended platform, or direct on floor is indicated.

2. Concrete base construction requirements are specified in Division 22 Section "Common Work Results for Plumbing."

B. Install water heaters level and plumb, according to layout drawings, original design, and referenced standards. Maintain manufacturer's recommended clearances. Arrange units so controls and devices needing service are accessible.

C. Install combination temperature and pressure relief valves in top portion of storage tanks. Use relief valves with sensing elements that extend into tanks. Extend commercial, water-heater, relief-valve outlet, with drain piping same as domestic water piping in continuous downward pitch, and discharge by positive air gap onto closest floor drain.

D. Install water heater drain piping as indirect waste to spill by positive air gap into open drains or over floor drains. Install hose-end drain valves at low points in water piping for water heaters that do not have tank drains.

E. Install thermometer on outlet piping of water heaters.

F. Install water regulator, with integral bypass relief valve, in booster-heater inlet piping and water hammer arrester in booster-heater outlet piping.

G. Install piping-type heat traps on inlet and outlet piping of water heater storage tanks without integral or fitting-type heat traps.

H. Fill water heaters with water.

3.2 CONNECTIONS

A. Install piping adjacent to water heaters to allow service and maintenance. Arrange piping for easy removal of water heaters.

B. Ground all equipment and connect all wiring.

3.3 FIELD QUALITY CONTROL

A. Engage a factory-authorized service representative to inspect field-assembled components and equipment installation, including connections.

B. Perform the following field tests and inspections:

1. Leak Test: After installation, test for leaks. Repair leaks and retest until no leaks exist.
2. Operational Test: After electrical circuitry has been energized, confirm proper operation.
3. Test and adjust controls and safeties. Replace damaged and malfunctioning controls and equipment.

C. Remove and replace water heaters that do not pass tests and inspections and retest as specified above.

3.4 DEMONSTRATION

A. Engage a factory-authorized service representative to train Owner's maintenance personnel to adjust, operate, and maintain commercial electric water heaters. Refer to Division 01 Section "Demonstration and Training."

END OF SECTION 223300

SECTION 224000 - PLUMBING FIXTURES

PART 1 - GENERAL

1.1 SUMMARY

A. This Section includes the following:

1. Faucets for lavatories, bathtubs, bathtub/showers, showers, and sinks.
2. Flushometers.
3. Toilet seats.
4. Protective shielding guards.
5. Fixture supports.
6. Dishwasher air-gap fittings.
7. Disposers.
8. Hot-water dispensers.
9. Water closets.
10. Urinals.
11. Lavatories.
12. Bathtubs.
13. Individual showers.
14. Kitchen sinks.
15. Service sinks.
16. Laundry trays.

1.2 DEFINITIONS

A. Accessible Fixture: Plumbing fixture that can be approached, entered, and used by people with disabilities.

B. FRP: Fiberglass-reinforced plastic.

C. PMMA: Polymethyl methacrylate (acrylic) plastic.

D. PVC: Polyvinyl chloride plastic.

E. Solid Surface: Nonporous, homogeneous, cast-polymer-plastic material with heat-, impact-, scratch-, and stain-resistance qualities.

1.3 SUBMITTALS

A. Product Data: For each type of product indicated.

B. Operation and maintenance data to owner.

1.4 QUALITY ASSURANCE

A. Electrical Components, Devices, and Accessories: Listed and labeled as defined in NFPA 70, Article 100, by a testing agency acceptable to authorities having jurisdiction, and marked for intended use.

B. Regulatory Requirements: Comply with requirements in ICC A117.1, "Accessible and Usable Buildings and Facilities"; Public Law 90-480, "Architectural Barriers Act"; Public Law 101-336, "Americans with Disabilities Act"; and with all local accessibility codes for plumbing fixtures for people with disabilities.

C. Regulatory Requirements: Comply with requirements in Public Law 102-486, "Energy Policy Act," about water flow and consumption rates for plumbing fixtures.

D. NSF Standard: Comply with NSF 61, "Drinking Water System Components--Health Effects," for fixture materials that will be in contact with potable water.

E. Select combinations of fixtures and trim, faucets, fittings, and other components that are compatible.

F. Comply with the following applicable standards and other requirements specified for plumbing fixtures:

1. Enameled, Cast-Iron Fixtures: ASME A112.19.1M.
2. Plastic Laundry Trays: ANSI Z124.6.
3. Plastic Shower Enclosures: ANSI Z124.2.
4. Plastic Sinks: ANSI Z124.6.
5. Porcelain-Enameled, Formed-Steel Fixtures: ASME A112.19.4M.
6. Slip-Resistant Bathing Surfaces: ASTM F 462.
7. Solid-Surface-Material Lavatories and Sinks: ANSI/ICPA SS-1.
8. Stainless-Steel Residential Sinks: ASME A112.19.3.
9. Vitreous-China Fixtures: ASME A112.19.2M.
10. Water-Closet, Flush Valve, Tank Trim: ASME A112.19.5.
11. Water-Closet, Flushometer Tank Trim: ASSE 1037.

G. Comply with the following applicable standards and other requirements specified for lavatory and sink faucets:

1. Backflow Protection Devices for Faucets with Side Spray: ASME A112.18.3M.
2. Backflow Protection Devices for Faucets with Hose-Thread Outlet: ASME A112.18.3M.
3. Diverter Valves for Faucets with Hose Spray: ASSE 1025.
4. Faucets: ASME A112.18.1.
5. Hose-Connection Vacuum Breakers: ASSE 1011.
6. Hose-Coupling Threads: ASME B1.20.7.
7. Integral, Atmospheric Vacuum Breakers: ASSE 1001.
8. NSF Potable-Water Materials: NSF 61.
9. Pipe Threads: ASME B1.20.1.
10. Sensor-Actuated Faucets and Electrical Devices: UL 1951.
11. Supply Fittings: ASME A112.18.1.
12. Brass Waste Fittings: ASME A112.18.2.

H. Comply with the following applicable standards and other requirements specified for bathtub, bathtub/shower, and shower faucets:

1. Backflow Protection Devices for Hand-Held Showers: ASME A112.18.3M.
2. Combination, Pressure-Equalizing and Thermostatic-Control Antiscald Faucets: ASSE 1016.
3. Faucets: ASME A112.18.1.
4. Hand-Held Showers: ASSE 1014.
5. High-Temperature-Limit Controls for Thermal-Shock-Preventing Devices: ASTM F 445.
6. Hose-Coupling Threads: ASME B1.20.7.
7. Manual-Control Antiscald Faucets: ASTM F 444.
8. Pipe Threads: ASME B1.20.1.
9. Pressure-Equalizing-Control Antiscald Faucets: ASTM F 444 and ASSE 1016.
10. Sensor-Actuated Faucets and Electrical Devices: UL 1951.
11. Thermostatic-Control Antiscald Faucets: ASTM F 444 and ASSE 1016.

I. Comply with the following applicable standards and other requirements specified for miscellaneous fittings:

1. Atmospheric Vacuum Breakers: ASSE 1001.
2. Brass and Copper Supplies: ASME A112.18.1.
3. Dishwasher Air-Gap Fittings: ASSE 1021.
4. Manual-Operation Flushometers: ASSE 1037.
5. Plastic Tubular Fittings: ASTM F 409.
6. Brass Waste Fittings: ASME A112.18.2.
7. Sensor-Operation Flushometers: ASSE 1037 and UL 1951.

J. Comply with the following applicable standards and other requirements specified for miscellaneous components:

1. Disposers: ASSE 1008 and UL 430.
2. Dishwasher Air-Gap Fittings: ASSE 1021.
3. Flexible Water Connectors: ASME A112.18.6.
4. Grab Bars: ASTM F 446.
5. Hose-Coupling Threads: ASME B1.20.7.
6. Hot-Water Dispensers: ASSE 1023 and UL 499.
7. Off-Floor Fixture Supports: ASME A112.6.1M.
8. Pipe Threads: ASME B1.20.1.
9. Plastic Toilet Seats: ANSI Z124.5.
10. Supply and Drain Protective Shielding Guards: ICC A117.1.

PART 2 - PRODUCTS

2.1 FIXTURES - See drawing schedule for fixture product information.

2.2 FIXTURE SUPPLIES

A. Fixture supply valve kit shall include chrome plated brass stops with full turn brass stem, chrome plated copper risers where visible to the public or plastic risers where fixture is located in a private unit (dwelling, office, hotel room, etc.), and shallow steel or forged brass with set screw flange. Inlet shall be sized per the fixture schedule, IPS or sweat connection to valve inlet only, compression fittings will not be allowed at valve inlet. Outlet shall be sized to match the connected fixture inlet(s) with IPS or compression connections. Supply kit shall be by Brass Craft, McGuire, Watts ~~or approved equal.~~

PART 3 - EXECUTION

3.1 INSTALLATION

A. Assemble plumbing fixtures, trim, fittings, and other components according to manufacturers' written instructions.

B. Install off-floor supports, affixed to building substrate, for wall-mounting fixtures.

1. Use carrier supports with waste fitting and seal for back-outlet fixtures.
2. Use carrier supports without waste fitting for fixtures with tubular waste piping.
3. Use chair-type carrier supports with rectangular steel uprights for accessible fixtures.

C. Install back-outlet, wall-mounting fixtures onto waste fitting seals and attach to supports.

D. Install floor-mounting fixtures on closet flanges or other attachments to piping or building substrate.

E. Install wall-mounting fixtures with tubular waste piping attached to supports.

F. Install fixtures level and plumb according to roughing-in drawings.

G. Install water-supply piping with stop on each supply to each fixture to be connected to water distribution piping. Attach supplies to supports or substrate within pipe spaces behind fixtures. Install stops in locations where they can be easily reached for operation.

H. Install trap and tubular waste piping on drain outlet of each fixture to be directly connected to sanitary drainage system.

I. Install tubular waste piping on drain outlet of each fixture to be indirectly connected to drainage system.

J. Install flushometer valves for accessible water closets and urinals with handle mounted on wide side of compartment. Install other actuators in locations that are easy for people with disabilities to reach.

K. Install tanks for accessible, tank-type water closets with lever handle mounted on wide side of compartment.

L. Install toilet seats on water closets.

M. Install faucet-spout fittings with specified flow rates and patterns in faucet spouts if faucets are not available with required rates and patterns. Include adapters if required.

N. Install water-supply flow-control fittings with specified flow rates in fixture supplies at stop valves.

O. Install faucet flow-control fittings with specified flow rates and patterns in faucet spouts if faucets are not available with required rates and patterns. Include adapters if required.

P. Install shower flow-control fittings with specified maximum flow rates in shower arms.

Q. Install traps on fixture outlets.

1. Exception: Omit trap on fixtures with integral traps.
2. Exception: Omit trap on indirect wastes, unless otherwise indicated.

R. Install disposer in outlet of each sink indicated to have disposer. Install switch where indicated or in wall adjacent to sink if location is not indicated.

S. Install dishwasher air-gap fitting at each sink indicated to have air-gap fitting. Connect inlet hose to dishwasher and outlet hose to disposer.

T. Install hot-water dispensers in back top surface of sink or in countertop with spout over sink.

U. Install escutcheons at piping wall and ceiling penetrations in exposed, finished locations and within cabinets and millwork. Use deep-pattern escutcheons if required to conceal protruding fittings.

V. Set bathtubs and showers in leveling bed of cement grout.

W. Seal joints between fixtures and walls, floors, and countertops using sanitary-type, one-part, mildew-resistant silicone sealant. Match sealant color to fixture color. Sealants are specified in Division 07 Section "Joint Sealants."

3.2 CONNECTIONS

A. Piping installation requirements are specified in other Division 22 Sections. Drawings indicate general arrangement of piping, fittings, and specialties.

B. Connect fixtures with water supplies, stops, and risers, and with traps, soil, waste, and vent piping. Use size fittings required to match fixtures.

C. Ground equipment according to Division 26 Section "Grounding and Bonding for Electrical Systems."

D. Connect wiring according to Division 26 Section "Low-Voltage Electrical Power Conductors and Cables."

3.3 FIELD QUALITY CONTROL

A. Verify that installed plumbing fixtures are categories and types specified for locations where installed.

B. Check that plumbing fixtures are complete with trim, faucets, fittings, and other specified components.

C. Inspect installed plumbing fixtures for damage. Replace damaged fixtures and components.

D. Test installed fixtures after water systems are pressurized for proper operation. Replace malfunctioning fixtures and components, then retest. Repeat procedure until units operate properly.

E. Install fresh batteries in sensor-operated mechanisms.

3.4 PROTECTION

A. Provide protective covering for installed fixtures and fittings.

B. Do not allow use of plumbing fixtures for temporary facilities unless approved in writing by Owner.

END OF SECTION 224000

SECTION 230500

COMMON WORK RESULTS FOR HVAC

PART 1 - GENERAL

1.1 SUMMARY

A. This Section includes the following:

1. Piping materials and installation instructions common to most piping systems.
2. Dielectric fittings.
3. Mechanical sleeve seals.
4. Sleeves.
5. Escutcheons.
6. Grout.
7. HVAC demolition.
8. Equipment installation requirements common to equipment sections.
9. Concrete bases.
10. Supports and anchorages.

1.2 DEFINITIONS

A. Finished Spaces: Spaces other than mechanical and electrical equipment rooms, furred spaces, pipe and duct chases, unheated spaces immediately below roof, spaces above ceilings, unexcavated spaces, crawlspaces, and tunnels.

B. Exposed, Interior Installations: Exposed to view indoors. Examples include finished occupied spaces and mechanical equipment rooms.

C. Exposed, Exterior Installations: Exposed to view outdoors or subject to outdoor ambient temperatures and weather conditions. Examples include rooftop locations.

D. Concealed, Interior Installations: Concealed from view and protected from physical contact by building occupants. Examples include above ceilings and chases.

E. Concealed, Exterior Installations: Concealed from view and protected from weather conditions and physical contact by building occupants but subject to outdoor ambient temperatures. Examples include installations within unheated shelters.

1.3 SUBMITTALS

A. Welding certificates.

1.4 QUALITY ASSURANCE

A. Steel Support Welding: Qualify processes and operators according to AWS D1.1, "Structural Welding Code--Steel."

B. Steel Pipe Welding: Qualify processes and operators according to ASME Boiler and Pressure Vessel Code: Section IX, "Welding and Brazing Qualifications."

1. Comply with provisions in ASME B31 Series, "Code for Pressure Piping."
2. Certify that each welder has passed AWS qualification tests for welding processes involved and that certification is current.

C. Electrical Characteristics for HVAC Equipment: Equipment of higher electrical characteristics may be furnished provided such proposed equipment is approved in writing and connecting electrical services, circuit breakers, and conduit sizes are appropriately modified. If minimum energy ratings or efficiencies are specified, equipment shall comply with requirements.

PART 2 - PRODUCTS

2.1 PIPE, TUBE, AND FITTINGS

A. Refer to individual Division 23 piping Sections for pipe, tube, and fitting materials and joining methods.

B. Pipe Threads: ASME B1.20.1 for factory-threaded pipe and pipe fittings.

2.2 JOINING MATERIALS

A. Refer to individual Division 23 piping Sections for special joining materials not listed below.

B. Pipe-Flange Gasket Materials: ASME B16.21, nonmetallic, flat, asbestos-free, 1/8-inch maximum thickness unless thickness or specific material is indicated.

C. Plastic, Pipe-Flange Gasket, Bolts, and Nuts: Type and material recommended by piping system manufacturer, unless otherwise indicated.

D. Solder Filler Metals: ASTM B 32, lead-free alloys. Include water-flushable flux according to ASTM B 813.

E. Brazing Filler Metals: AWS A5.8, BCuP Series or BAg1, unless otherwise indicated.

F. Welding Filler Metals: Comply with AWS D10.12.

G. Solvent Cements for Joining Plastic Piping:

1. CPVC Piping: ASTM F 493.
2. PVC Piping: ASTM D 2564. Include primer according to ASTM F 656.

2.3 DIELECTRIC FITTINGS

A. Description: Combination fitting of copper alloy and ferrous materials with threaded, solder-joint, plain, or weld-neck end connections that match piping system materials.

B. Insulating Material: Suitable for system fluid, pressure, and temperature.

C. Dielectric Unions: Factory-fabricated, union assembly, for 250-psig minimum working pressure at 180 deg F.

D. Dielectric Flanges: Factory-fabricated, companion-flange assembly, for 150- or 300-psig minimum working pressure as required to suit system pressures.

E. Dielectric Couplings: Galvanized-steel coupling with inert and noncorrosive, thermoplastic lining; threaded ends; and 300-psig minimum working pressure at 225 deg F.

F. Dielectric Nipples: Electroplated steel nipple with inert and noncorrosive, thermoplastic lining; plain, threaded, or grooved ends; and 300-psig minimum working pressure at 225 deg F.

2.4 MECHANICAL SLEEVE SEALS

A. Description: Modular sealing element unit, designed for field assembly, to fill annular space between pipe and sleeve.

B. Sealing Elements: [**EPDM**] [**NBR**] <**Insert other**> interlocking links shaped to fit surface of pipe. Include type and number required for pipe material and size of pipe.

C. Pressure Plates: [**Plastic**] [**Carbon steel**] [**Stainless steel**]. Include two for each sealing element.

D. Connecting Bolts and Nuts: [**Carbon steel with corrosion-resistant coating**] [**Stainless steel**] of length required to secure pressure plates to sealing elements. Include one for each sealing element.

2.5 SLEEVES

A. Galvanized-Steel Sheet: 0.0239-inch minimum thickness; round tube closed with welded longitudinal joint.

B. Steel Pipe: ASTM A 53, Type E, Grade B, Schedule 40, galvanized, plain ends.

C. Cast Iron: Cast or fabricated "wall pipe" equivalent to ductile-iron pressure pipe, with plain ends and integral waterstop, unless otherwise indicated.

D. Stack Sleeve Fittings: Manufactured, cast-iron sleeve with integral clamping flange. Include clamping ring and bolts and nuts for membrane flashing.

1. Underdeck Clamp: Clamping ring with set screws.

E. Molded PVC: Permanent, with nailing flange for attaching to wooden forms.

F. PVC Pipe: ASTM D 1785, Schedule 40.

G. Molded PE: Reusable, PE, tapered-cup shaped, and smooth-outer surface with nailing flange for attaching to wooden forms.

2.6 ESCUTCHEONS

A. Description: Manufactured wall and ceiling escutcheons and floor plates, with an ID to closely fit around pipe, tube, and insulation of insulated piping and an OD that completely covers opening.

B. One-Piece, Deep-Pattern Type: Deep-drawn, box-shaped brass with polished chrome-plated finish.

C. One-Piece, Cast-Brass Type: With set screw.

1. Finish: [Polished chrome-plated] [Rough brass] [Polished chrome-plated and rough brass].

D. Split-Casting, Cast-Brass Type: With concealed hinge and set screw.

1. Finish: [Polished chrome-plated] [Rough brass] [Polished chrome-plated and rough brass].

2.7 GROUT

A. Description: ASTM C 1107, Grade B, nonshrink and nonmetallic, dry hydraulic-cement grout.

1. Characteristics: Post-hardening, volume-adjusting, nonstaining, noncorrosive, nongaseous, and recommended for interior and exterior applications.
2. Design Mix: 5000-psi, 28-day compressive strength.
3. Packaging: Premixed and factory packaged.

PART 3 - EXECUTION

3.1 HVAC DEMOLITION

A. Refer to Division 01 Section "Cutting and Patching" and Division 02 Section "Selective Structure Demolition" for general demolition requirements and procedures.

B. Disconnect, demolish, and remove HVAC systems, equipment, and components indicated to be removed.

1. Piping to Be Removed: Remove portion of piping indicated to be removed and cap or plug remaining piping with same or compatible piping material.
2. Piping to Be Abandoned in Place: Drain piping and cap or plug piping with same or compatible piping material.
3. Ducts to Be Removed: Remove portion of ducts indicated to be removed and plug remaining ducts with same or compatible ductwork material.
4. Ducts to Be Abandoned in Place: Cap or plug ducts with same or compatible ductwork material.
5. Equipment to Be Removed: Disconnect and cap services and remove equipment.
6. Equipment to Be Removed and Reinstalled: Disconnect and cap services and remove, clean, and store equipment; when appropriate, reinstall, reconnect, and make equipment operational.
7. Equipment to Be Removed and Salvaged: Disconnect and cap services and remove equipment and deliver to Owner.

C. If pipe, insulation, or equipment to remain is damaged in appearance or is unserviceable, remove damaged or unserviceable portions and replace with new products of equal capacity and quality.

3.2 PIPING SYSTEMS - COMMON REQUIREMENTS

A. Install piping according to the following requirements and Division 23 Sections specifying piping systems.

B. Drawing plans, schematics, and diagrams indicate general location and arrangement of piping systems. Indicated locations and arrangements were used to size pipe and calculate friction loss, expansion, pump sizing, and other design considerations. Install piping as indicated unless deviations to layout are approved on Coordination Drawings.

C. Install piping in concealed locations, unless otherwise indicated and except in equipment rooms and service areas.

D. Install piping indicated to be exposed and piping in equipment rooms and service areas at right angles or parallel to building walls. Diagonal runs are prohibited unless specifically indicated otherwise.

E. Install piping above accessible ceilings to allow sufficient space for ceiling panel removal.

F. Install piping to permit valve servicing.

G. Install piping at indicated slopes.

H. Install piping free of sags and bends.

I. Install fittings for changes in direction and branch connections.

J. Install piping to allow application of insulation.

K. Select system components with pressure rating equal to or greater than system operating pressure.

L. Install escutcheons for penetrations of walls, ceilings, and floors.

M. Install sleeves for pipes passing through concrete and masonry walls, gypsum-board partitions, and concrete floor and roof slabs.

N. Aboveground, Exterior-Wall Pipe Penetrations: Seal penetrations using sleeves and mechanical sleeve seals. Select sleeve size to allow for 1-inch annular clear space between pipe and sleeve for installing mechanical sleeve seals.

1. Install steel pipe for sleeves smaller than 6 inches in diameter.
2. Install cast-iron "wall pipes" for sleeves 6 inches and larger in diameter.
3. Mechanical Sleeve Seal Installation: Select type and number of sealing elements required for pipe material and size. Position pipe in center of sleeve. Assemble mechanical sleeve seals and install in annular space between pipe and sleeve. Tighten bolts against pressure plates that cause sealing elements to expand and make watertight seal.

O. Underground, Exterior-Wall Pipe Penetrations: Install cast-iron "wall pipes" for sleeves. Seal pipe penetrations using mechanical sleeve seals. Select sleeve size to allow for 1-inch annular clear space between pipe and sleeve for installing mechanical sleeve seals.

1. Mechanical Sleeve Seal Installation: Select type and number of sealing elements required for pipe material and size. Position pipe in center of sleeve. Assemble mechanical sleeve seals and install in annular space between pipe and sleeve. Tighten bolts against pressure plates that cause sealing elements to expand and make watertight seal.

P. Fire-Barrier Penetrations: Maintain indicated fire rating of walls, partitions, ceilings, and floors at pipe penetrations. Seal pipe penetrations with firestop materials. Refer to Division 07 Section "Penetration Firestopping" for materials.

Q. Verify final equipment locations for roughing-in.

R. Refer to equipment specifications in other Sections of these Specifications for roughing-in requirements.

3.3 PIPING JOINT CONSTRUCTION

A. Join pipe and fittings according to the following requirements and Division 23 Sections specifying piping systems.

B. Ream ends of pipes and tubes and remove burrs. Bevel plain ends of steel pipe.

C. Remove scale, slag, dirt, and debris from inside and outside of pipe and fittings before assembly.

D. Soldered Joints: Apply ASTM B 813, water-flushable flux, unless otherwise indicated, to tube end. Construct joints according to ASTM B 828 or CDA's "Copper Tube Handbook," using lead-free solder alloy complying with ASTM B 32.

E. Brazed Joints: Construct joints according to AWS's "Brazing Handbook," "Pipe and Tube" Chapter, using copper-phosphorus brazing filler metal complying with AWS A5.8.

F. Threaded Joints: Thread pipe with tapered pipe threads according to ASME B1.20.1. Cut threads full and clean using sharp dies. Ream threaded pipe ends to remove burrs and restore full ID. Join pipe fittings and valves as follows:

1. Apply appropriate tape or thread compound to external pipe threads unless dry seal threading is specified.
2. Damaged Threads: Do not use pipe or pipe fittings with threads that are corroded or damaged. Do not use pipe sections that have cracked or open welds.

G. Welded Joints: Construct joints according to AWS D10.12, using qualified processes and welding operators according to Part 1 "Quality Assurance" Article.

H. Flanged Joints: Select appropriate gasket material, size, type, and thickness for service application. Install gasket concentrically positioned. Use suitable lubricants on bolt threads.

I. Plastic Piping Solvent-Cement Joints: Clean and dry joining surfaces. Join pipe and fittings according to the following:

1. Comply with ASTM F 402, for safe-handling practice of cleaners, primers, and solvent cements.

2. CPVC Piping: Join according to ASTM D 2846/D 2846M Appendix.
3. PVC Pressure Piping: Join schedule number ASTM D 1785, PVC pipe and PVC socket fittings according to ASTM D 2672. Join other-than-schedule-number PVC pipe and socket fittings according to ASTM D 2855.
4. PVC Nonpressure Piping: Join according to ASTM D 2855.

J. Plastic Pressure Piping Gasketed Joints: Join according to ASTM D 3139.

K. Plastic Nonpressure Piping Gasketed Joints: Join according to ASTM D 3212.

L. PE Piping Heat-Fusion Joints: Clean and dry joining surfaces by wiping with clean cloth or paper towels. Join according to ASTM D 2657.

1. Plain-End Pipe and Fittings: Use butt fusion.
2. Plain-End Pipe and Socket Fittings: Use socket fusion.

M. Fiberglass Bonded Joints: Prepare pipe ends and fittings, apply adhesive, and join according to pipe manufacturer's written instructions.

3.4 PIPING CONNECTIONS

A. Make connections according to the following, unless otherwise indicated:

1. Install unions, in piping NPS 2 and smaller, adjacent to each valve and at final connection to each piece of equipment.
2. Install flanges, in piping NPS 2-1/2 and larger, adjacent to flanged valves and at final connection to each piece of equipment.
3. Dry Piping Systems: Install dielectric unions and flanges to connect piping materials of dissimilar metals.
4. Wet Piping Systems: Install dielectric coupling and nipple fittings to connect piping materials of dissimilar metals.

3.5 EQUIPMENT INSTALLATION - COMMON REQUIREMENTS

A. Install equipment to allow maximum possible headroom unless specific mounting heights are not indicated.

B. Install equipment level and plumb, parallel and perpendicular to other building systems and components in exposed interior spaces, unless otherwise indicated.

C. Install HVAC equipment to facilitate service, maintenance, and repair or replacement of components. Connect equipment for ease of disconnecting, with minimum interference to other installations. Extend grease fittings to accessible locations.

D. Install equipment to allow right of way for piping installed at required slope.

3.6 CONCRETE BASES

A. Concrete Bases: Anchor equipment to concrete base according to equipment manufacturer's written instructions and according to seismic codes at Project.

1. Construct concrete bases of dimensions indicated, but not less than 4 inches larger in both directions than supported unit.
2. Install dowel rods to connect concrete base to concrete floor. Unless otherwise indicated, install dowel rods on 18-inch centers around the full perimeter of the base.
3. Install epoxy-coated anchor bolts for supported equipment that extend through concrete base, and anchor into structural concrete floor.
4. Place and secure anchorage devices. Use supported equipment manufacturer's setting drawings, templates, diagrams, instructions, and directions furnished with items to be embedded.
5. Install anchor bolts to elevations required for proper attachment to supported equipment.
6. Install anchor bolts according to anchor-bolt manufacturer's written instructions.
7. Use [**3000-psi**] <**Insert other**>, 28-day compressive-strength concrete and reinforcement as specified in Division 03 Section "[**Cast-in-Place Concrete**] [**Miscellaneous Cast-in-Place Concrete**]."

3.7 ERECTION OF METAL SUPPORTS AND ANCHORAGES

A. Refer to Division 05 Section "Metal Fabrications" for structural steel.

B. Cut, fit, and place miscellaneous metal supports accurately in location, alignment, and elevation to support and anchor HVAC materials and equipment.

C. Field Welding: Comply with AWS D1.1.

3.8 ERECTION OF WOOD SUPPORTS AND ANCHORAGES

A. Cut, fit, and place wood grounds, nailers, blocking, and anchorages to support, and anchor HVAC materials and equipment.

B. Select fastener sizes that will not penetrate members if opposite side will be exposed to view or will receive finish materials. Tighten connections between members. Install fasteners without splitting wood members.

C. Attach to substrates as required to support applied loads.

3.9 GROUTING

A. Mix and install grout for HVAC equipment base bearing surfaces, pump and other equipment base plates, and anchors.

B. Clean surfaces that will come into contact with grout.

C. Provide forms as required for placement of grout.

D. Avoid air entrapment during placement of grout.

E. Place grout, completely filling equipment bases.

F. Place grout on concrete bases and provide smooth bearing surface for equipment.

G. Place grout around anchors.

H. Cure placed grout.

END OF SECTION 230500

SECTION 230513 - COMMON MOTOR REQUIREMENTS FOR HVAC EQUIPMENT

PART 1 - GENERAL

1.1 SUMMARY

A. Section includes general requirements for single-phase and polyphase, general-purpose, horizontal, small and medium, squirrel-cage induction motors for use on ac power systems up to 600 V and installed at equipment manufacturer's factory or shipped separately by equipment manufacturer for field installation.

1.2 COORDINATION

A. Coordinate features of motors, installed units, and accessory devices to be compatible with the following:

1. Motor controllers.
2. Torque, speed, and horsepower requirements of the load.
3. Ratings and characteristics of supply circuit and required control sequence.
4. Ambient and environmental conditions of installation location.

PART 2 - PRODUCTS

2.1 GENERAL MOTOR REQUIREMENTS

A. Comply with requirements in this Section except when stricter requirements are specified in HVAC equipment schedules or Sections.

B. Comply with NEMA MG 1 unless otherwise indicated.

2.2 MOTOR CHARACTERISTICS

A. Duty: Continuous duty at ambient temperature of 40 deg C and at altitude of 3300 feet above sea level.

B. Capacity and Torque Characteristics: Sufficient to start, accelerate, and operate connected loads at designated speeds, at installed altitude and environment, with indicated operating sequence, and without exceeding nameplate ratings or considering service factor.

2.3 POLYPHASE MOTORS

A. Description: NEMA MG 1, Design B, medium induction motor.

B. Efficiency: Energy efficient, as defined in NEMA MG 1.

C. Service Factor: 1.15.

D. Multispeed Motors: Variable torque.

1. For motors with 2:1 speed ratio, consequent pole, single winding.
2. For motors with other than 2:1 speed ratio, separate winding for each speed.

E. Rotor: Random-wound, squirrel cage.

F. Bearings: Regreasable, shielded, antifriction ball bearings suitable for radial and thrust loading.

G. Temperature Rise: Match insulation rating.

H. Insulation: Class F.

I. Code Letter Designation:

1. Motors 15 HP and Larger: NEMA starting Code F or Code G.
2. Motors Smaller than 15 HP: Manufacturer's standard starting characteristic.

J. Enclosure Material: Cast iron for motor frame sizes 324T and larger; rolled steel for motor frame sizes smaller than 324T.

2.4 POLYPHASE MOTORS WITH ADDITIONAL REQUIREMENTS

A. Motors Used with Reduced-Voltage and Multispeed Controllers: Match wiring connection requirements for controller with required motor leads. Provide terminals in motor terminal box, suited to control method.

B. Motors Used with Variable Frequency Controllers: [Ratings, characteristics, and features coordinated with and approved by controller manufacturer.]

1. Windings: Copper magnet wire with moisture-resistant insulation varnish, designed and tested to resist transient spikes, high frequencies, and short time rise pulses produced by pulse-width modulated inverters.
2. Energy- and Premium-Efficient Motors: Class B temperature rise; Class F insulation.
3. Inverter-Duty Motors: Class F temperature rise; Class H insulation.
4. Thermal Protection: Comply with NEMA MG 1 requirements for thermally protected motors.

2.5 SINGLE-PHASE MOTORS

A. Motors larger than 1/20 hp shall be one of the following, to suit starting torque and requirements of specific motor application:

1. Permanent-split capacitor.
2. Split phase.

B. Multispeed Motors: Variable-torque, permanent-split-capacitor type.

C. Bearings: Prelubricated, antifriction ball bearings or sleeve bearings suitable for radial and thrust loading.

D. Motors 1/20 HP and Smaller: Shaded-pole type.

E. Thermal Protection: Internal protection to automatically open power supply circuit to motor when winding temperature exceeds a safe value calibrated to temperature rating of motor insulation. Thermal-protection device shall automatically reset when motor temperature returns to normal range.

PART 3 - EXECUTION (Not Applicable)

END OF SECTION 230513

SECTION 230548 - VIBRATION AND SEISMIC CONTROLS FOR HVAC PIPING AND EQUIPMENT

PART 1 - GENERAL

1.1 SUMMARY

A. This Section includes the following:

1. Isolation pads.
2. Isolation mounts.
3. Restrained elastomeric isolation mounts.
4. [**Freestanding**] [**Restrained**] [**Freestanding and restrained**] spring isolators.
5. Housed spring mounts.
6. Elastomeric hangers.
7. Spring hangers.
8. Spring hangers with vertical-limit stops.
9. Pipe riser resilient supports.
10. Resilient pipe guides.
11. Restraining braces and cables.

1.2 PERFORMANCE REQUIREMENTS

A. Wind-Restraint Loading:

1. Basic Wind Speed: <**Insert value**>.
2. Building Classification Category: [**I**] [**II**] [**III**] [**IV**].
3. Minimum 10 lb/sq. ft. (48.8 kg/sq. m) multiplied by the maximum area of the HVAC component projected on a vertical plane that is normal to the wind direction, and 45 degrees either side of normal.

B. Seismic-Restraint Loading:

1. Site Class as Defined in the IBC: [**A**] [**B**] [**C**] [**D**] [**E**] [**F**].
2. Assigned Seismic Use Group or Building Category as Defined in the IBC: [**I**] [**II**] [**III**].

   a. Component Importance Factor: [**1.0**] [**1.5**] <**Insert value**>.
   b. Component Response Modification Factor: [**1.5**] [**2.5**] [**3.5**] [**5.0**] <**Insert value**>.
   c. Component Amplification Factor: [**1.0**] [**2.5**] <**Insert value**>.

3. Design Spectral Response Acceleration at Short Periods (0.2 Second): <**Insert percent**>.
4. Design Spectral Response Acceleration at 1-Second Period: <**Insert percent**>.

1.3 SUBMITTALS

A. Product Data: For each product indicated.

B. Delegated-Design Submittal: For vibration isolation and seismic-restraint calculations and details indicated to comply with performance requirements and design criteria, including analysis data signed and sealed by the qualified professional engineer responsible for their preparation.

C. Welding certificates.

D. Qualification Data: For professional engineer.

E. Field quality-control test reports.

1.4 QUALITY ASSURANCE

A. Comply with seismic-restraint requirements in the IBC unless requirements in this Section are more stringent.

B. Welding: Qualify procedures and personnel according to AWS D1.1/D1.1M, "Structural Welding Code - Steel."

C. Seismic-restraint devices shall have horizontal and vertical load testing and analysis and shall bear anchorage preapproval OPA number from OSHPD, preapproval by ICC-ES, or preapproval by another agency acceptable to authorities having jurisdiction, showing maximum seismic-restraint ratings. Ratings based on independent testing are preferred to ratings based on calculations. If preapproved ratings are not available, submittals based on independent testing are preferred. Calculations (including combining shear and tensile loads) to support seismic-restraint designs must be signed and sealed by a qualified professional engineer.

PART 2 - PRODUCTS

2.1 VIBRATION ISOLATORS

A. Available Manufacturers: Subject to compliance with requirements, manufacturers offering products that may be incorporated into the Work include, but are not limited to, the following:

B. Manufacturers: Subject to compliance with requirements, provide products by one of the following:

C. Basis-of-Design Product: Subject to compliance with requirements, provide [**the product indicated on Drawings**] <**Insert manufacturer's name; product name or designation**> or a comparable product by one of the following:

1. Ace Mountings Co., Inc.
2. Amber/Booth Company, Inc.
3. California Dynamics Corporation.
4. Isolation Technology, Inc.
5. Kinetics Noise Control.
6. Mason Industries.
7. Vibration Eliminator Co., Inc.
8. Vibration Isolation.

9. Vibration Mountings & Controls, Inc.
10. <**Insert manufacturer's name**>.

D. Pads <**Insert drawing designation**>: Arranged in single or multiple layers of sufficient stiffness for uniform loading over pad area, molded with a nonslip pattern and galvanized-steel baseplates, and factory cut to sizes that match requirements of supported equipment.

1. Resilient Material: Oil- and water-resistant [**neoprene**] [**rubber**] [**hermetically sealed compressed fiberglass**].

E. Mounts <**Insert drawing designation**>: Double-deflection type, with molded, oil-resistant rubber, hermetically sealed compressed fiberglass, or neoprene isolator elements with factory-drilled, encapsulated top plate for bolting to equipment and with baseplate for bolting to structure. Color-code or otherwise identify to indicate capacity range.

1. Materials: Cast-ductile-iron or welded steel housing containing two separate and opposing, oil-resistant rubber or neoprene elements that prevent central threaded element and attachment hardware from contacting the housing during normal operation.
2. Neoprene: Shock-absorbing materials compounded according to the standard for bridge-bearing neoprene as defined by AASHTO.

F. Restrained Mounts <**Insert drawing designation**>: All-directional mountings with seismic restraint.

1. Materials: Cast-ductile-iron or welded steel housing containing two separate and opposing, oil-resistant rubber or neoprene elements that prevent central threaded element and attachment hardware from contacting the housing during normal operation.
2. Neoprene: Shock-absorbing materials compounded according to the standard for bridge-bearing neoprene as defined by AASHTO.

G. Spring Isolators <**Insert drawing designation**>: Freestanding, laterally stable, open-spring isolators.

1. Outside Spring Diameter: Not less than 80 percent of the compressed height of the spring at rated load.
2. Minimum Additional Travel: 50 percent of the required deflection at rated load.
3. Lateral Stiffness: More than 80 percent of rated vertical stiffness.
4. Overload Capacity: Support 200 percent of rated load, fully compressed, without deformation or failure.
5. Baseplates: Factory drilled for bolting to structure and bonded to 1/4-inch- (6-mm-) thick, rubber isolator pad attached to baseplate underside. Baseplates shall limit floor load to 500 psig (3447 kPa).
6. Top Plate and Adjustment Bolt: Threaded top plate with adjustment bolt and cap screw to fasten and level equipment.

H. Restrained Spring Isolators <**Insert drawing designation**>: Freestanding, steel, open-spring isolators with seismic or limit-stop restraint.

1. Housing: Steel with resilient vertical-limit stops to prevent spring extension due to weight being removed; factory-drilled baseplate bonded to 1/4-inch- (6-mm-) thick,

neoprene or rubber isolator pad attached to baseplate underside; and adjustable equipment mounting and leveling bolt that acts as blocking during installation.

2. Restraint: Seismic or limit stop as required for equipment and authorities having jurisdiction.
3. Outside Spring Diameter: Not less than 80 percent of the compressed height of the spring at rated load.
4. Minimum Additional Travel: 50 percent of the required deflection at rated load.
5. Lateral Stiffness: More than 80 percent of rated vertical stiffness.
6. Overload Capacity: Support 200 percent of rated load, fully compressed, without deformation or failure.

I. Housed Spring Mounts <**Insert drawing designation**>: Housed spring isolator with integral seismic snubbers.

1. Housing: Ductile-iron or steel housing to provide all-directional seismic restraint.
2. Base: Factory drilled for bolting to structure.
3. Snubbers: Vertically adjustable to allow a maximum of 1/4-inch (6-mm) travel up or down before contacting a resilient collar.

J. Elastomeric Hangers <**Insert drawing designation**>: Single or double-deflection type, fitted with molded, oil-resistant elastomeric isolator elements bonded to steel housings with threaded connections for hanger rods. Color-code or otherwise identify to indicate capacity range.

K. Spring Hangers <**Insert drawing designation**>: Combination coil-spring and elastomeric-insert hanger with spring and insert in compression.

1. Frame: Steel, fabricated for connection to threaded hanger rods and to allow for a maximum of 30 degrees of angular hanger-rod misalignment without binding or reducing isolation efficiency.
2. Outside Spring Diameter: Not less than 80 percent of the compressed height of the spring at rated load.
3. Minimum Additional Travel: 50 percent of the required deflection at rated load.
4. Lateral Stiffness: More than 80 percent of rated vertical stiffness.
5. Overload Capacity: Support 200 percent of rated load, fully compressed, without deformation or failure.
6. Elastomeric Element: Molded, oil-resistant rubber or neoprene. Steel-washer-reinforced cup to support spring and bushing projecting through bottom of frame.
7. Self-centering hanger rod cap to ensure concentricity between hanger rod and support spring coil.

L. Spring Hangers with Vertical-Limit Stop <**Insert drawing designation**>: Combination coil-spring and elastomeric-insert hanger with spring and insert in compression and with a vertical-limit stop.

1. Frame: Steel, fabricated for connection to threaded hanger rods and to allow for a maximum of 30 degrees of angular hanger-rod misalignment without binding or reducing isolation efficiency.
2. Outside Spring Diameter: Not less than 80 percent of the compressed height of the spring at rated load.
3. Minimum Additional Travel: 50 percent of the required deflection at rated load.
4. Lateral Stiffness: More than 80 percent of rated vertical stiffness.

5. Overload Capacity: Support 200 percent of rated load, fully compressed, without deformation or failure.
6. Elastomeric Element: Molded, oil-resistant rubber or neoprene.
7. Adjustable Vertical Stop: Steel washer with neoprene washer "up-stop" on lower threaded rod.
8. Self-centering hanger rod cap to ensure concentricity between hanger rod and support spring coil.

M. Pipe Riser Resilient Support <**Insert drawing designation**>: All-directional, acoustical pipe anchor consisting of 2 steel tubes separated by a minimum of 1/2-inch- (13-mm-) thick neoprene. Include steel and neoprene vertical-limit stops arranged to prevent vertical travel in both directions. Design support for a maximum load on the isolation material of 500 psig (3.45 MPa) and for equal resistance in all directions.

N. Resilient Pipe Guides: Telescopic arrangement of 2 steel tubes or post and sleeve arrangement separated by a minimum of 1/2-inch- (13-mm-) thick neoprene. Where clearances are not readily visible, a factory-set guide height with a shear pin to allow vertical motion due to pipe expansion and contraction shall be fitted. Shear pin shall be removable and reinsertable to allow for selection of pipe movement. Guides shall be capable of motion to meet location requirements.

2.2 SEISMIC-RESTRAINT DEVICES

A. Available Manufacturers: Subject to compliance with requirements, manufacturers offering products that may be incorporated into the Work include, but are not limited to, the following:

B. Manufacturers: Subject to compliance with requirements, provide products by one of the following:

C. Basis-of-Design Product: Subject to compliance with requirements, provide [**the product indicated on Drawings**] <**Insert manufacturer's name; product name or designation**> or a comparable product by one of the following:

1. Amber/Booth Company, Inc.
2. California Dynamics Corporation.
3. Cooper B-Line, Inc.; a division of Cooper Industries.
4. Hilti, Inc.
5. Kinetics Noise Control.
6. Loos & Co.; Cableware Division.
7. Mason Industries.
8. TOLCO Incorporated; a brand of NIBCO INC.
9. Unistrut; Tyco International, Ltd.
10. <**Insert manufacturer's name**>.

D. General Requirements for Restraint Components: Rated strengths, features, and applications shall be as defined in reports by [**an evaluation service member of ICC-ES**] [**OSHPD**] [**an agency acceptable to authorities having jurisdiction**].

1. Structural Safety Factor: Allowable strength in tension, shear, and pullout force of components shall be at least [**four**] <**Insert number**> times the maximum seismic forces to which they will be subjected.

E. Channel Support System: MFMA-3, shop- or field-fabricated support assembly made of slotted steel channels with accessories for attachment to braced component at one end and to building structure at the other end and other matching components and with corrosion-resistant coating; and rated in tension, compression, and torsion forces.

F. Restraint Cables: [**ASTM A 603 galvanized**] [**ASTM A 492 stainless**]-steel cables with end connections made of steel assemblies with thimbles, brackets, swivel, and bolts designed for restraining cable service; and with a minimum of two clamping bolts for cable engagement.

G. Hanger Rod Stiffener: [**Steel tube or steel slotted-support-system sleeve with internally bolted connections**] [**Reinforcing steel angle clamped**] to hanger rod.

H. Bushings for Floor-Mounted Equipment Anchor Bolts: Neoprene bushings designed for rigid equipment mountings, and matched to type and size of anchor bolts and studs.

I. Resilient Isolation Washers and Bushings: One-piece, molded, oil- and water-resistant neoprene, with a flat washer face.

J. Mechanical Anchor Bolts: Drilled-in and stud-wedge or female-wedge type in zinc-coated steel for interior applications and stainless steel for exterior applications. Select anchor bolts with strength required for anchor and as tested according to ASTM E 488. Minimum length of eight times diameter.

PART 3 - EXECUTION

3.1 APPLICATIONS

A. Multiple Pipe Supports: Secure pipes to trapeze member with clamps approved for application by [**an evaluation service member of ICC-ES**] [**OSHPD**] [**an agency acceptable to authorities having jurisdiction**].

B. Hanger Rod Stiffeners: Install hanger rod stiffeners where indicated or scheduled on Drawings to receive them and where required to prevent buckling of hanger rods due to seismic forces.

C. Strength of Support and Seismic-Restraint Assemblies: Where not indicated, select sizes of components so strength will be adequate to carry present and future static and seismic loads within specified loading limits.

3.2 VIBRATION-CONTROL AND SEISMIC-RESTRAINT DEVICE INSTALLATION

A. Comply with requirements in Division 07 Section "Roof Accessories" for installation of roof curbs, equipment supports, and roof penetrations.

B. Equipment Restraints:

1. Install resilient bolt isolation washers on equipment anchor bolts where clearance between anchor and adjacent surface exceeds 0.125 inch (3.2 mm).
2. Install seismic-restraint devices using methods approved by [**an evaluation service member of ICC-ES**] [**OSHPD**] [**an agency acceptable to authorities having jurisdiction**] providing required submittals for component.

C. Piping Restraints:

1. Comply with requirements in MSS SP-127.
2. Space lateral supports a maximum of [**40 feet (12 m)**] <**Insert dimension**> o.c., and longitudinal supports a maximum of [**80 feet (24 m)**] <**Insert dimension**> o.c.
3. Brace a change of direction longer than 12 feet (3.7 m).

D. Install cables so they do not bend across edges of adjacent equipment or building structure.

E. Install seismic-restraint devices using methods approved by [**an evaluation service member of ICC-ES**] [**OSHPD**] [**an agency acceptable to authorities having jurisdiction**] providing required submittals for component.

F. Install bushing assemblies for anchor bolts for floor-mounted equipment, arranged to provide resilient media between anchor bolt and mounting hole in concrete base.

G. Attachment to Structure: If specific attachment is not indicated, anchor bracing to structure at flanges of beams, at upper truss chords of bar joists, or at concrete members.

H. Drilled-in Anchors:

1. Identify position of reinforcing steel and other embedded items prior to drilling holes for anchors. Do not damage existing reinforcing or embedded items during coring or drilling. Notify the structural engineer if reinforcing steel or other embedded items are encountered during drilling. Locate and avoid prestressed tendons, electrical and telecommunications conduit, and gas lines.
2. Do not drill holes in concrete or masonry until concrete, mortar, or grout has achieved full design strength.
3. Wedge Anchors: Protect threads from damage during anchor installation. Heavy-duty sleeve anchors shall be installed with sleeve fully engaged in the structural element to which anchor is to be fastened.
4. Set anchors to manufacturer's recommended torque, using a torque wrench.
5. Install zinc-coated steel anchors for interior and stainless-steel anchors for exterior applications.

3.3 ACCOMMODATION OF DIFFERENTIAL SEISMIC MOTION

A. Install flexible connections in piping where they cross seismic joints, where adjacent sections or branches are supported by different structural elements, and where the connections terminate with connection to equipment that is anchored to a different structural element from the one supporting the connections as they approach equipment. Comply with requirements in Division 23 Section "Hydronic Piping" for piping flexible connections.

3.4 FIELD QUALITY CONTROL

A. Perform tests and inspections.

B. Tests and Inspections:

1. Provide evidence of recent calibration of test equipment by a testing agency acceptable to authorities having jurisdiction.
2. Schedule test with Owner, through Architect, before connecting anchorage device to restrained component (unless postconnection testing has been approved), and with at least seven days' advance notice.
3. Obtain Architect's approval before transmitting test loads to structure. Provide temporary load-spreading members.
4. Test at least [**four**] <**Insert number**> of each type and size of installed anchors and fasteners selected by Architect.
5. Test to 90 percent of rated proof load of device.
6. Measure isolator restraint clearance.
7. Measure isolator deflection.
8. If a device fails test, modify all installations of same type and retest until satisfactory results are achieved.

C. Remove and replace malfunctioning units and retest as specified above.

D. Prepare test and inspection reports.

3.5 ADJUSTING

A. Adjust isolators after piping system is at operating weight.

B. Adjust limit stops on restrained spring isolators to mount equipment at normal operating height. After equipment installation is complete, adjust limit stops so they are out of contact during normal operation.

C. Adjust active height of spring isolators.

D. Adjust restraints to permit free movement of equipment within normal mode of operation.

3.6 HVAC VIBRATION-CONTROL AND SEISMIC-RESTRAINT DEVICE SCHEDULE

A. Supported or Suspended Equipment: <**Insert name and drawing designation**>.

1. Equipment Location: <**Insert room number**>.
2. Pads:

   a. Material: [**Neoprene**] [**Rubber**] [**Hermetically sealed compressed fiberglass**].
   b. Thickness: <**Insert inches (mm)**>.
   c. Number of Pads: <**Insert number**> thick.

3. Isolator Type: <**Insert generic name or designation used in Part 2**>.
4. Base Type: <**Insert generic name or designation used in Part 2**>.

5. Minimum Deflection: <**Insert inches (mm)**>.
6. Component Importance Factor: [**1.0**] [**1.5**].
7. Component Response Modification Factor: [**1.5**] [**2.5**] [**3.5**] [**5.0**].
8. Component Amplification Factor: [**1.0**] [**2.5**].

END OF SECTION 230548

SECTION 230553 - IDENTIFICATION FOR HVAC PIPING AND EQUIPMENT

PART 1 - GENERAL

1.1 SUMMARY

A. Section Includes:

1. Equipment labels.
2. Warning signs and labels.
3. Pipe labels.
4. Duct labels.

1.2 SUBMITTAL

A. Product Data: For each type of product indicated.

PART 2 - PRODUCTS

2.1 EQUIPMENT LABELS

A. Metal Labels for Equipment:

1. Material and Thickness: [Brass, **0.032-inch**] [Stainless steel, **0.025-inch**] [Aluminum, **0.032-inch**] [or] [anodized aluminum, **0.032-inch**] minimum thickness, and having predrilled or stamped holes for attachment hardware.
2. Minimum Label Size: Length and width vary for required label content, but not less than 2-1/2 by 3/4 inch.
3. Minimum Letter Size: 1/4 inch for name of units if viewing distance is less than 24 inches, 1/2 inch for viewing distances up to 72 inches, and proportionately larger lettering for greater viewing distances. Include secondary lettering two-thirds to three-fourths the size of principal lettering.
4. Fasteners: Stainless-steel [rivets] [rivets or self-tapping screws] [self-tapping screws].
5. Adhesive: Contact-type permanent adhesive, compatible with label and with substrate.

B. Plastic Labels for Equipment:

1. Material and Thickness: Multilayer, multicolor, plastic labels for mechanical engraving, [**1/16 inch**] [**1/8 inch**] <**Insert dimension**> thick, and having predrilled holes for attachment hardware.
2. Letter Color: [Black] [Blue] [Red] [White] [Yellow] <Insert color>.
3. Background Color: [**Black**] [**Blue**] [**Red**] [**White**] [**Yellow**] <**Insert color**>.
4. Maximum Temperature: Able to withstand temperatures up to 160 deg F.
5. Minimum Label Size: Length and width vary for required label content, but not less than 2-1/2 by 3/4 inch.
6. Minimum Letter Size: 1/4 inch for name of units if viewing distance is less than 24 inches, 1/2 inch for viewing distances up to 72 inches, and proportionately larger lettering for greater viewing distances. Include secondary lettering two-thirds to three-fourths the size of principal lettering.
7. Fasteners: Stainless-steel [rivets] [rivets or self-tapping screws] [self-tapping screws].
8. Adhesive: Contact-type permanent adhesive, compatible with label and with substrate.

C. Label Content: Include equipment's Drawing designation or unique equipment number, Drawing numbers where equipment is indicated (plans, details, and schedules), plus the Specification Section number and title where equipment is specified.

D. Equipment Label Schedule: For each item of equipment to be labeled, on 8-1/2-by-11-inch bond paper. Tabulate equipment identification number and identify Drawing numbers where equipment is indicated (plans, details, and schedules), plus the Specification Section number and title where equipment is specified. Equipment schedule shall be included in operation and maintenance data.

2.2 WARNING SIGNS AND LABELS

A. Material and Thickness: Multilayer, multicolor, plastic labels for mechanical engraving, [**1/16 inch**] [**1/8 inch**] <**Insert dimension**> thick, and having predrilled holes for attachment hardware.

B. Letter Color: [Black] [Blue] [Red] [White] [Yellow] <Insert color>.

C. Background Color: [**Black**] [**Blue**] [**Red**] [**White**] [**Yellow**] <**Insert color**>.

D. Maximum Temperature: Able to withstand temperatures up to 160 deg F.

E. Minimum Label Size: Length and width vary for required label content, but not less than 2-1/2 by 3/4 inch.

F. Minimum Letter Size: 1/4 inch for name of units if viewing distance is less than 24 inches, 1/2 inch for viewing distances up to 72 inches, and proportionately larger lettering for greater viewing distances. Include secondary lettering two-thirds to three-fourths the size of principal lettering.

G. Fasteners: Stainless-steel [rivets] [rivets or self-tapping screws] [self-tapping screws].

H. Adhesive: Contact-type permanent adhesive, compatible with label and with substrate.

I. Label Content: Include caution and warning information, plus emergency notification instructions.

2.3 PIPE LABELS

A. General Requirements for Manufactured Pipe Labels: Preprinted, color-coded, with lettering indicating service, and showing flow direction.

B. Pretensioned Pipe Labels: Precoiled, semirigid plastic formed to [**partially cover**] [**cover full**] circumference of pipe and to attach to pipe without fasteners or adhesive.

C. Self-Adhesive Pipe Labels: Printed plastic with contact-type, permanent-adhesive backing.

D. Pipe Label Contents: Include identification of piping service using same designations or abbreviations as used on Drawings, pipe size, and an arrow indicating flow direction.

1. Flow-Direction Arrows: Integral with piping system service lettering to accommodate both directions, or as separate unit on each pipe label to indicate flow direction.
2. Lettering Size: At least 1-1/2 inches high.

2.4 DUCT LABELS

A. Material and Thickness: Multilayer, multicolor, plastic labels for mechanical engraving, [**1/16 inch**] [**1/8 inch**] <**Insert dimension**> thick, and having predrilled holes for attachment hardware.

B. Letter Color: [Black] [Blue] [Red] [White] [Yellow] <Insert color>.

C. Background Color: [**Black**] [**Blue**] [**Red**] [**White**] [**Yellow**] <**Insert color**>.

D. Maximum Temperature: Able to withstand temperatures up to 160 deg F.

E. Minimum Label Size: Length and width vary for required label content, but not less than 2-1/2 by 3/4 inch.

F. Minimum Letter Size: 1/4 inch for name of units if viewing distance is less than 24 inches, 1/2 inch for viewing distances up to 72 inches, and proportionately larger lettering for greater viewing distances. Include secondary lettering two-thirds to three-fourths the size of principal lettering.

G. Fasteners: Stainless-steel [rivets] [rivets or self-tapping screws] [self-tapping screws].

H. Adhesive: Contact-type permanent adhesive, compatible with label and with substrate.

I. Duct Label Contents: Include identification of duct service using same designations or abbreviations as used on Drawings, duct size, and an arrow indicating flow direction.

1. Flow-Direction Arrows: Integral with duct system service lettering to accommodate both directions, or as separate unit on each duct label to indicate flow direction.
2. Lettering Size: At least 1-1/2 inches high.

PART 3 - EXECUTION

3.1 PREPARATION

A. Clean piping and equipment surfaces of substances that could impair bond of identification devices, including dirt, oil, grease, release agents, and incompatible primers, paints, and encapsulants.

3.2 EQUIPMENT LABEL INSTALLATION

A. Install or permanently fasten labels on each major item of mechanical equipment.

B. Locate equipment labels where accessible and visible.

3.3 PIPE LABEL INSTALLATION

A. Piping Color-Coding: Painting of piping is specified in Division 09 Section "[**Interior Painting**] [**High-Performance Coatings**]."

B. Locate pipe labels where piping is exposed or above accessible ceilings in finished spaces; machine rooms; accessible maintenance spaces such as shafts, tunnels, and plenums; and exterior exposed locations as follows:

1. Near each valve and control device.
2. Near each branch connection, excluding short takeoffs for fixtures and terminal units. Where flow pattern is not obvious, mark each pipe at branch.
3. Near penetrations through walls, floors, ceilings, and inaccessible enclosures.
4. At access doors, manholes, and similar access points that permit view of concealed piping.
5. Near major equipment items and other points of origination and termination.
6. Spaced at maximum intervals of [**50 feet**] <**Insert dimension**> along each run. Reduce intervals to [**25 feet**] <**Insert dimension**> in areas of congested piping and equipment.
7. On piping above removable acoustical ceilings. Omit intermediately spaced labels.

C. Pipe Label Color Schedule:

1. Chilled-Water Piping:

   a. ***Background Color: [Black] [Blue] [Red] [White] [Yellow] <Insert color>.***

   b. ***Letter Color: [Black] [Blue] [Red] [White] [Yellow] <Insert color>.***

2. Condenser-Water Piping:

   a. ***Background Color: [Black] [Blue] [Red] [White] [Yellow] <Insert color>.***

   b. ***Letter Color: [Black] [Blue] [Red] [White] [Yellow] <Insert color>.***

3. Heating Water Piping:

   a. ***Background Color: [Black] [Blue] [Red] [White] [Yellow] <Insert color>.***

   b. ***Letter Color: [Black] [Blue] [Red] [White] [Yellow] <Insert color>.***

4. Refrigerant Piping:

   a. ***Background Color: [Black] [Blue] [Red] [White] [Yellow] <Insert color>.***

   b. ***Letter Color: [Black] [Blue] [Red] [White] [Yellow] <Insert color>.***

5. Low-Pressure Steam Piping:

   a. ***Background Color: [Black] [Blue] [Red] [White] [Yellow] <Insert color>.***

   b. ***Letter Color: [Black] [Blue] [Red] [White] [Yellow] <Insert color>.***

6. High-Pressure Steam Piping:

   a. ***Background Color: [Black] [Blue] [Red] [White] [Yellow] <Insert color>.***

   b. ***Letter Color: [Black] [Blue] [Red] [White] [Yellow] <Insert color>.***

7. Steam Condensate Piping:

   a. ***Background Color: [Black] [Blue] [Red] [White] [Yellow] <Insert color>.***

   b. ***Letter Color: [Black] [Blue] [Red] [White] [Yellow] <Insert color>.***

3.4 DUCT LABEL INSTALLATION

A. Install [**plastic-laminated**] [**self-adhesive**] duct labels with permanent adhesive on air ducts in the following color codes:

   1. [**Blue**] <**Insert color**>: For cold-air supply ducts.
   2. [**Yellow**] <**Insert color**>: For hot-air supply ducts.
   3. [**Green**] <**Insert color**>: For exhaust-, outside-, relief-, return-, and mixed-air ducts.
   4. ASME A13.1 Colors and Designs: For hazardous material exhaust.

B. Locate labels near points where ducts enter into concealed spaces and at maximum intervals of [**50 feet**] <**Insert dimension**> in each space where ducts are exposed or concealed by removable ceiling system.

END OF SECTION 230553

SECTION 230593 - TESTING, ADJUSTING, AND BALANCING FOR HVAC

PART 1 - GENERAL

1.1 SUMMARY

A. Section Includes:

1. Balancing Air Systems:

a. Constant-volume air systems.
b. Variable-air-volume systems.

2. Balancing Hydronic Piping Systems:

a. Constant-flow hydronic systems.
b. Variable-flow hydronic systems.

1.2 DEFINITIONS

A. AABC: Associated Air Balance Council.

B. NEBB: National Environmental Balancing Bureau.

C. TAB: Testing, adjusting, and balancing.

D. TABB: Testing, Adjusting, and Balancing Bureau.

E. TAB Specialist: An entity engaged to perform TAB Work.

1.3 SUBMITTALS

A. LEED Submittal:

1. Air-Balance Report for LEED Prerequisite EQ 1: Documentation of work performed for ASHRAE 62.1-2004, Section 7.2.2, "Air Balancing."

B. Strategies and Procedures Plan: Within [**30**] [**60**] [**90**] **<Insert number>** days of Contractor's Notice to Proceed, submit TAB strategies and step-by-step procedures as specified in "Preparation" Article.

C. Certified TAB reports.

1.4 QUALITY ASSURANCE

A. TAB Contractor Qualifications: Engage a TAB entity certified by [**AABC**] [**NEBB**] [**or**] [**TABB**].

1. TAB Field Supervisor: Employee of the TAB contractor and certified by [**AABC**] [**NEBB**] [**or**] [**TABB**].
2. TAB Technician: Employee of the TAB contractor and who is certified by [**AABC**] [**NEBB**] [**or**] [**TABB**] as a TAB technician.

B. Certify TAB field data reports and perform the following:

1. Review field data reports to validate accuracy of data and to prepare certified TAB reports.
2. Certify that the TAB team complied with the approved TAB plan and the procedures specified and referenced in this Specification.

C. TAB Report Forms: Use standard TAB contractor's forms approved by [**Architect**] [**Owner**] [**Construction Manager**] [**Commissioning Authority**].

D. Instrumentation Type, Quantity, Accuracy, and Calibration: As described in ASHRAE 111, Section 5, "Instrumentation."

PART 2 - PRODUCTS (Not Applicable)

PART 3 - EXECUTION

3.1 EXAMINATION

A. Examine the Contract Documents to become familiar with Project requirements and to discover conditions in systems' designs that may preclude proper TAB of systems and equipment.

B. Examine systems for installed balancing devices, such as test ports, gage cocks, thermometer wells, flow-control devices, balancing valves and fittings, and manual volume dampers. Verify that locations of these balancing devices are accessible.

C. Examine the approved submittals for HVAC systems and equipment.

D. Examine design data including HVAC system descriptions, statements of design assumptions for environmental conditions and systems' output, and statements of philosophies and assumptions about HVAC system and equipment controls.

E. Examine ceiling plenums and underfloor air plenums used for supply, return, or relief air to verify that they meet the leakage class of connected ducts as specified in Division 23 Section "[**Metal Ducts**] [**Nonmetal Ducts**]" and are properly separated from adjacent areas. Verify that penetrations in plenum walls are sealed and fire-stopped if required.

F. Examine equipment performance data including fan and pump curves.

1. Relate performance data to Project conditions and requirements, including system effects that can create undesired or unpredicted conditions that cause reduced capacities in all or part of a system.
2. Calculate system-effect factors to reduce performance ratings of HVAC equipment when installed under conditions different from the conditions used to rate equipment performance. To calculate system effects for air systems, use tables and charts found in AMCA 201, "Fans and Systems," or in SMACNA's "HVAC Systems - Duct Design." Compare results with the design data and installed conditions.

G. Examine system and equipment installations and verify that field quality-control testing, cleaning, and adjusting specified in individual Sections have been performed.

H. Examine test reports specified in individual system and equipment Sections.

I. Examine HVAC equipment and filters and verify that bearings are greased, belts are aligned and tight, and equipment with functioning controls is ready for operation.

J. Examine terminal units, such as variable-air-volume boxes, and verify that they are accessible and their controls are connected and functioning.

K. Examine strainers. Verify that startup screens are replaced by permanent screens with indicated perforations.

L. Examine three-way valves for proper installation for their intended function of diverting or mixing fluid flows.

M. Examine heat-transfer coils for correct piping connections and for clean and straight fins.

N. Examine system pumps to ensure absence of entrained air in the suction piping.

O. Examine operating safety interlocks and controls on HVAC equipment.

P. Report deficiencies discovered before and during performance of TAB procedures. Observe and record system reactions to changes in conditions. Record default set points if different from indicated values.

3.2 PREPARATION

A. Prepare a TAB plan that includes strategies and step-by-step procedures.

B. Complete system-readiness checks and prepare reports. Verify the following:

1. Permanent electrical-power wiring is complete.
2. Hydronic systems are filled, clean, and free of air.
3. Automatic temperature-control systems are operational.
4. Equipment and duct access doors are securely closed.
5. Balance, smoke, and fire dampers are open.
6. Isolating and balancing valves are open and control valves are operational.
7. Ceilings are installed in critical areas where air-pattern adjustments are required and access to balancing devices is provided.
8. Windows and doors can be closed so indicated conditions for system operations can be met.

3.3 GENERAL PROCEDURES FOR TESTING AND BALANCING

A. Perform testing and balancing procedures on each system according to the procedures contained in [AABC's "National Standards for Total System Balance"] [ASHRAE 111] [NEBB's "Procedural Standards for Testing, Adjusting, and Balancing of Environmental Systems"] [SMACNA's "HVAC Systems - Testing, Adjusting, and Balancing"] and in this Section.

1. Comply with requirements in ASHRAE 62.1-2004, Section 7.2.2, "Air Balancing."

B. Cut insulation, ducts, pipes, and equipment cabinets for installation of test probes to the minimum extent necessary for TAB procedures.

1. After testing and balancing, patch probe holes in ducts with same material and thickness as used to construct ducts.
2. Install and join new insulation that matches removed materials. Restore insulation, coverings, vapor barrier, and finish according to Division 23 Section "HVAC Insulation."

C. Mark equipment and balancing devices, including damper-control positions, valve position indicators, fan-speed-control levers, and similar controls and devices, with paint or other suitable, permanent identification material to show final settings.

D. Take and report testing and balancing measurements in [**inch-pound (IP)**] [**and**] [**metric (SI)**] units.

3.4 GENERAL PROCEDURES FOR BALANCING AIR SYSTEMS

A. Prepare test reports for both fans and outlets. Obtain manufacturer's outlet factors and recommended testing procedures. Crosscheck the summation of required outlet volumes with required fan volumes.

B. Prepare schematic diagrams of systems' "as-built" duct layouts.

C. For variable-air-volume systems, develop a plan to simulate diversity.

D. Determine the best locations in main and branch ducts for accurate duct-airflow measurements.

E. Check airflow patterns from the outdoor-air louvers and dampers and the return- and exhaust-air dampers through the supply-fan discharge and mixing dampers.

F. Locate start-stop and disconnect switches, electrical interlocks, and motor starters.

G. Verify that motor starters are equipped with properly sized thermal protection.

H. Check dampers for proper position to achieve desired airflow path.

I. Check for airflow blockages.

J. Check condensate drains for proper connections and functioning.

K. Check for proper sealing of air-handling-unit components.

L. Verify that air duct system is sealed as specified in Division 23 Section "Metal Ducts."

3.5 PROCEDURES FOR CONSTANT-VOLUME AIR SYSTEMS

A. Adjust fans to deliver total indicated airflows within the maximum allowable fan speed listed by fan manufacturer.

1. Measure total airflow.

    a. Where sufficient space in ducts is unavailable for Pitot-tube traverse measurements, measure airflow at terminal outlets and inlets and calculate the total airflow.

2. Measure fan static pressures as follows to determine actual static pressure:

    a. Measure outlet static pressure as far downstream from the fan as practical and upstream from restrictions in ducts such as elbows and transitions.
    b. Measure static pressure directly at the fan outlet or through the flexible connection.
    c. Measure inlet static pressure of single-inlet fans in the inlet duct as near the fan as possible, upstream from the flexible connection, and downstream from duct restrictions.
    d. Measure inlet static pressure of double-inlet fans through the wall of the plenum that houses the fan.

3. Measure static pressure across each component that makes up an air-handling unit, rooftop unit, and other air-handling and -treating equipment.

    a. Report the cleanliness status of filters and the time static pressures are measured.

4. Measure static pressures entering and leaving other devices, such as sound traps, heat-recovery equipment, and air washers, under final balanced conditions.
5. Review Record Documents to determine variations in design static pressures versus actual static pressures. Calculate actual system-effect factors. Recommend adjustments to accommodate actual conditions.
6. Obtain approval from [**Architect**] [**Owner**] [**Construction Manager**] [**Commissioning Authority**] for adjustment of fan speed higher or lower than indicated speed. Comply with requirements in Division 23 Sections for air-handling units for adjustment of fans, belts, and pulley sizes to achieve indicated air-handling-unit performance.
7. Do not make fan-speed adjustments that result in motor overload. Consult equipment manufacturers about fan-speed safety factors. Modulate dampers and measure fan-motor amperage to ensure that no overload will occur. Measure amperage in full-cooling, full-heating, economizer, and any other operating mode to determine the maximum required brake horsepower.

B. Adjust volume dampers for main duct, submain ducts, and major branch ducts to indicated airflows within specified tolerances.

1. Measure airflow of submain and branch ducts.

    a. Where sufficient space in submain and branch ducts is unavailable for Pitot-tube traverse measurements, measure airflow at terminal outlets and inlets and calculate the total airflow for that zone.

2. Measure static pressure at a point downstream from the balancing damper, and adjust volume dampers until the proper static pressure is achieved.
3. Remeasure each submain and branch duct after all have been adjusted. Continue to adjust submain and branch ducts to indicated airflows within specified tolerances.

C. Measure air outlets and inlets without making adjustments.

1. Measure terminal outlets using a direct-reading hood or outlet manufacturer's written instructions and calculating factors.

D. Adjust air outlets and inlets for each space to indicated airflows within specified tolerances of indicated values. Make adjustments using branch volume dampers rather than extractors and the dampers at air terminals.

1. Adjust each outlet in same room or space to within specified tolerances of indicated quantities without generating noise levels above the limitations prescribed by the Contract Documents.
2. Adjust patterns of adjustable outlets for proper distribution without drafts.

3.6 PROCEDURES FOR VARIABLE-AIR-VOLUME SYSTEMS

A. Compensating for Diversity: When the total airflow of all terminal units is more than the indicated airflow of the fan, place a selected number of terminal units at a minimum set-point airflow with the remainder at maximum airflow condition until the total airflow of the terminal units equals the indicated airflow of the fan. Select the reduced-airflow terminal units so they are distributed evenly among the branch ducts.

B. Pressure-Independent, Variable-Air-Volume Systems: After the fan systems have been adjusted, adjust the variable-air-volume systems as follows:

1. Set outdoor-air dampers at minimum, and set return- and exhaust-air dampers at a position that simulates full-cooling load.
2. Select the terminal unit that is most critical to the supply-fan airflow and static pressure. Measure static pressure. Adjust system static pressure so the entering static pressure for the critical terminal unit is not less than the sum of the terminal-unit manufacturer's recommended minimum inlet static pressure plus the static pressure needed to overcome terminal-unit discharge system losses.
3. Measure total system airflow. Adjust to within indicated airflow.
4. Set terminal units at maximum airflow and adjust controller or regulator to deliver the designed maximum airflow. Use terminal-unit manufacturer's written instructions to make this adjustment. When total airflow is correct, balance the air outlets downstream from terminal units the same as described for constant-volume air systems.
5. Set terminal units at minimum airflow and adjust controller or regulator to deliver the designed minimum airflow. Check air outlets for a proportional reduction in airflow the same as described for constant-volume air systems.

a. If air outlets are out of balance at minimum airflow, report the condition but leave outlets balanced for maximum airflow.

6. Remeasure the return airflow to the fan while operating at maximum return airflow and minimum outdoor airflow.

    a. Adjust the fan and balance the return-air ducts and inlets the same as described for constant-volume air systems.

7. Measure static pressure at the most critical terminal unit and adjust the static-pressure controller at the main supply-air sensing station to ensure that adequate static pressure is maintained at the most critical unit.
8. Record final fan-performance data.

C. Pressure-Dependent, Variable-Air-Volume Systems without Diversity: After the fan systems have been adjusted, adjust the variable-air-volume systems as follows:

1. Balance variable-air-volume systems the same as described for constant-volume air systems.
2. Set terminal units and supply fan at full-airflow condition.
3. Adjust inlet dampers of each terminal unit to indicated airflow and verify operation of the static-pressure controller. When total airflow is correct, balance the air outlets downstream from terminal units the same as described for constant-volume air systems.
4. Readjust fan airflow for final maximum readings.
5. Measure operating static pressure at the sensor that controls the supply fan if one is installed, and verify operation of the static-pressure controller.
6. Set supply fan at minimum airflow if minimum airflow is indicated. Measure static pressure to verify that it is being maintained by the controller.
7. Set terminal units at minimum airflow and adjust controller or regulator to deliver the designed minimum airflow. Check air outlets for a proportional reduction in airflow the same as described for constant-volume air systems.

    a. If air outlets are out of balance at minimum airflow, report the condition but leave the outlets balanced for maximum airflow.

8. Measure the return airflow to the fan while operating at maximum return airflow and minimum outdoor airflow.

    a. Adjust the fan and balance the return-air ducts and inlets the same as described for constant-volume air systems.

D. Pressure-Dependent, Variable-Air-Volume Systems with Diversity: After the fan systems have been adjusted, adjust the variable-air-volume systems as follows:

1. Set system at maximum indicated airflow by setting the required number of terminal units at minimum airflow. Select the reduced-airflow terminal units so they are distributed evenly among the branch ducts.
2. Adjust supply fan to maximum indicated airflow with the variable-airflow controller set at maximum airflow.
3. Set terminal units at full-airflow condition.
4. Adjust terminal units starting at the supply-fan end of the system and continuing progressively to the end of the system. Adjust inlet dampers of each terminal unit to indicated airflow. When total

airflow is correct, balance the air outlets downstream from terminal units the same as described for constant-volume air systems.

5. Adjust terminal units for minimum airflow.
    1) Measure static pressure at the sensor.
    2) Measure the return airflow to the fan while operating at maximum return airflow and minimum outdoor airflow. Adjust the fan and balance the return-air ducts and inlets the same as described for constant-volume air systems.

6. GENERAL PROCEDURES FOR HYDRONIC SYSTEMS

    a. Prepare test reports with pertinent design data, and number in sequence starting at pump to end of system. Check the sum of branch-circuit flows against the approved pump flow rate. Correct variations that exceed plus or minus 5 percent.
    b. Prepare schematic diagrams of systems' "as-built" piping layouts.
    c. Prepare hydronic systems for testing and balancing according to the following, in addition to the general preparation procedures specified above:

        1) Open all manual valves for maximum flow.
        2) Check liquid level in expansion tank.
        3) Check makeup water-station pressure gage for adequate pressure for highest vent.
        4) Check flow-control valves for specified sequence of operation, and set at indicated flow.
        5) Set differential-pressure control valves at the specified differential pressure. Do not set at fully closed position when pump is positive-displacement type unless several terminal valves are kept open.
        6) Set system controls so automatic valves are wide open to heat exchangers.
        7) Check pump-motor load. If motor is overloaded, throttle main flow-balancing device so motor nameplate rating is not exceeded.
        8) Check air vents for a forceful liquid flow exiting from vents when manually operated.

7. PROCEDURES FOR CONSTANT-FLOW HYDRONIC SYSTEMS

    a. Measure water flow at pumps. Use the following procedures except for positive-displacement pumps:

        1) Verify impeller size by operating the pump with the discharge valve closed. Read pressure differential across the pump. Convert pressure to head and correct for differences in gage heights. Note the point on manufacturer's pump curve at zero flow and verify that the pump has the intended impeller size.

            a) If impeller sizes must be adjusted to achieve pump performance, obtain approval from [**Architect**] [**Owner**] [**Construction Manager**] [**Commissioning Authority**] and comply with requirements in Division 23 Section "Hydronic Pumps."

        2) Check system resistance. With all valves open, read pressure differential across the pump and mark pump manufacturer's head-capacity curve. Adjust pump discharge valve until indicated water flow is achieved.

a) Monitor motor performance during procedures and do not operate motors in overload conditions.

3) Verify pump-motor brake horsepower. Calculate the intended brake horsepower for the system based on pump manufacturer's performance data. Compare calculated brake horsepower with nameplate data on the pump motor. Report conditions where actual amperage exceeds motor nameplate amperage.
4) Report flow rates that are not within plus or minus 10 percent of design.

b. Measure flow at all automatic flow control valves to verify that valves are functioning as designed.
c. Measure flow at all pressure-independent characterized control valves, with valves in fully open position, to verify that valves are functioning as designed.
d. Set calibrated balancing valves, if installed, at calculated presettings.
e. Measure flow at all stations and adjust, where necessary, to obtain first balance.

1) System components that have Cv rating or an accurately cataloged flow-pressure-drop relationship may be used as a flow-indicating device.

f. Measure flow at main balancing station and set main balancing device to achieve flow that is 5 percent greater than indicated flow.
g. Adjust balancing stations to within specified tolerances of indicated flow rate as follows:

1) Determine the balancing station with the highest percentage over indicated flow.
2) Adjust each station in turn, beginning with the station with the highest percentage over indicated flow and proceeding to the station with the lowest percentage over indicated flow.
3) Record settings and mark balancing devices.

h. Measure pump flow rate and make final measurements of pump amperage, voltage, rpm, pump heads, and systems' pressures and temperatures including outdoor-air temperature.
i. Measure the differential-pressure-control-valve settings existing at the conclusion of balancing.
j. Check settings and operation of each safety valve. Record settings.

8. PROCEDURES FOR VARIABLE-FLOW HYDRONIC SYSTEMS

a. Balance systems with automatic two- and three-way control valves by setting systems at maximum flow through heat-exchange terminals and proceed as specified above for hydronic systems.

9. PROCEDURES FOR MOTORS

a. Motors, 1/2 HP and Larger: Test at final balanced conditions and record the following data:

1) Manufacturer's name, model number, and serial number.
2) Motor horsepower rating.
3) Motor rpm.
4) Efficiency rating.
5) Nameplate and measured voltage, each phase.
6) Nameplate and measured amperage, each phase.
7) Starter thermal-protection-element rating.

b. Motors Driven by Variable-Frequency Controllers: Test for proper operation at speeds varying from minimum to maximum. Test the manual bypass of the controller to prove proper operation. Record observations including name of controller manufacturer, model number, serial number, and nameplate data.

10. PROCEDURES FOR CHILLERS

a. Balance water flow through each evaporator[**and condenser**] to within specified tolerances of indicated flow with all pumps operating. With only one chiller operating in a multiple chiller installation, do not exceed the flow for the maximum tube velocity recommended by the chiller manufacturer. Measure and record the following data with each chiller operating at design conditions:

1) Evaporator-water entering and leaving temperatures, pressure drop, and water flow.
2) For water-cooled chillers, condenser-water entering and leaving temperatures, pressure drop, and water flow.
3) Evaporator and condenser refrigerant temperatures and pressures, using instruments furnished by chiller manufacturer.
4) Power factor if factory-installed instrumentation is furnished for measuring kilowatts.
5) Kilowatt input if factory-installed instrumentation is furnished for measuring kilowatts.
6) Capacity: Calculate in tons of cooling.
7) For air-cooled chillers, verify condenser-fan rotation and record fan and motor data including number of fans and entering- and leaving-air temperatures.

11. PROCEDURES FOR COOLING TOWERS

a. Shut off makeup water for the duration of the test, and verify that makeup and blowdown systems are fully operational after tests and before leaving the equipment. Perform the following tests and record the results:

1) Measure condenser-water flow to each cell of the cooling tower.
2) Measure entering- and leaving-water temperatures.
3) Measure wet- and dry-bulb temperatures of entering air.
4) Measure wet- and dry-bulb temperatures of leaving air.
5) Measure condenser-water flow rate recirculating through the cooling tower.
6) Measure cooling-tower spray pump discharge pressure.
7) Adjust water level and feed rate of makeup water system.
8) Measure flow through bypass.

12. PROCEDURES FOR CONDENSING UNITS

a. Verify proper rotation of fans.
b. Measure entering- and leaving-air temperatures.
c. Record compressor data.

13. PROCEDURES FOR BOILERS

a. Hydronic Boilers: Measure and record entering- and leaving-water temperatures and water flow.
b. Steam Boilers: Measure and record entering-water temperature and flow and leaving-steam pressure, temperature, and flow.

14. PROCEDURES FOR HEAT-TRANSFER COILS

a. Measure, adjust, and record the following data for each water coil:

1) Entering- and leaving-water temperature.
2) Water flow rate.
3) Water pressure drop.
4) Dry-bulb temperature of entering and leaving air.
5) Wet-bulb temperature of entering and leaving air for cooling coils.
6) Airflow.
7) Air pressure drop.

b. Measure, adjust, and record the following data for each electric heating coil:

1) Nameplate data.
2) Airflow.
3) Entering- and leaving-air temperature at full load.
4) Voltage and amperage input of each phase at full load and at each incremental stage.
5) Calculated kilowatt at full load.
6) Fuse or circuit-breaker rating for overload protection.

c. Measure, adjust, and record the following data for each steam coil:

1) Dry-bulb temperature of entering and leaving air.
2) Airflow.
3) Air pressure drop.
4) Inlet steam pressure.

d. Measure, adjust, and record the following data for each refrigerant coil:

1) Dry-bulb temperature of entering and leaving air.
2) Wet-bulb temperature of entering and leaving air.
3) Airflow.
4) Air pressure drop.
5) Refrigerant suction pressure and temperature.

15. PROCEDURES FOR TESTING, ADJUSTING, AND BALANCING EXISTING SYSTEMS

a. Perform a preconstruction inspection of existing equipment that is to remain and be reused.

1) Measure and record the operating speed, airflow, and static pressure of each fan.

2) Measure motor voltage and amperage. Compare the values to motor nameplate information.
3) Check the refrigerant charge.
4) Check the condition of filters.
5) Check the condition of coils.
6) Check the operation of the drain pan and condensate-drain trap.
7) Check bearings and other lubricated parts for proper lubrication.
8) Report on the operating condition of the equipment and the results of the measurements taken. Report deficiencies.

b. Before performing testing and balancing of existing systems, inspect existing equipment that is to remain and be reused to verify that existing equipment has been cleaned and refurbished. Verify the following:

1) New filters are installed.
2) Coils are clean and fins combed.
3) Drain pans are clean.
4) Fans are clean.
5) Bearings and other parts are properly lubricated.
6) Deficiencies noted in the preconstruction report are corrected.

c. Perform testing and balancing of existing systems to the extent that existing systems are affected by the renovation work.

1) Compare the indicated airflow of the renovated work to the measured fan airflows, and determine the new fan speed and the face velocity of filters and coils.
2) Verify that the indicated airflows of the renovated work result in filter and coil face velocities and fan speeds that are within the acceptable limits defined by equipment manufacturer.
3) If calculations increase or decrease the air flow rates and water flow rates by more than 5 percent, make equipment adjustments to achieve the calculated rates. If increase or decrease is 5 percent or less, equipment adjustments are not required.
4) Balance each air outlet.

16. TOLERANCES

a. Set HVAC system's air flow rates and water flow rates within the following tolerances:

1) Supply, Return, and Exhaust Fans and Equipment with Fans: [**Plus or minus 10 percent**] <**Insert value**>.
2) Air Outlets and Inlets: [**Plus or minus 10 percent**] <**Insert value**>.
3) Heating-Water Flow Rate: [**Plus or minus 10 percent**] <**Insert value**>.
4) Cooling-Water Flow Rate: [**Plus or minus 10 percent**] <**Insert value**>.

17. REPORTING

a. Initial Construction-Phase Report: Based on examination of the Contract Documents as specified in "Examination" Article, prepare a report on the adequacy of design for systems' balancing devices. Recommend changes and additions to systems' balancing devices to facilitate proper perfor-

mance measuring and balancing. Recommend changes and additions to HVAC systems and general construction to allow access for performance measuring and balancing devices.

b. Status Reports: Prepare [**weekly**] [**biweekly**] [**monthly**] **<Insert time interval>** progress reports to describe completed procedures, procedures in progress, and scheduled procedures. Include a list of deficiencies and problems found in systems being tested and balanced. Prepare a separate report for each system and each building floor for systems serving multiple floors.

18. FINAL REPORT

E. General: Prepare a certified written report; tabulate and divide the report into separate sections for tested systems and balanced systems.

1. Include a certification sheet at the front of the report's binder, signed and sealed by the certified testing and balancing engineer.
2. Include a list of instruments used for procedures, along with proof of calibration.

F. Final Report Contents: In addition to certified field-report data, include the following:

1. Pump curves.
2. Fan curves.
3. Manufacturers' test data.
4. Field test reports prepared by system and equipment installers.
5. Other information relative to equipment performance; do not include Shop Drawings and product data.

G. General Report Data: In addition to form titles and entries, include the following data:

1. Title page.
2. Name and address of the TAB contractor.
3. Project name.
4. Project location.
5. Architect's name and address.
6. Engineer's name and address.
7. Contractor's name and address.
8. Report date.
9. Signature of TAB supervisor who certifies the report.
10. Table of Contents with the total number of pages defined for each section of the report. Number each page in the report.
11. Summary of contents including the following:

    a. Indicated versus final performance.
    b. Notable characteristics of systems.
    c. Description of system operation sequence if it varies from the Contract Documents.

12. Nomenclature sheets for each item of equipment.
13. Data for terminal units, including manufacturer's name, type, size, and fittings.
14. Notes to explain why certain final data in the body of reports vary from indicated values.
15. Test conditions for fans and pump performance forms including the following:

    a. Settings for outdoor-, return-, and exhaust-air dampers.
    b. Conditions of filters.
    c. Cooling coil, wet- and dry-bulb conditions.
    d. Face and bypass damper settings at coils.
    e. Fan drive settings including settings and percentage of maximum pitch diameter.
    f. Inlet vane settings for variable-air-volume systems.
    g. Settings for supply-air, static-pressure controller.
    h. Other system operating conditions that affect performance.

H. System Diagrams: Include schematic layouts of air and hydronic distribution systems. Present each system with single-line diagram and include the following:

1. Quantities of outdoor, supply, return, and exhaust airflows.
2. Water and steam flow rates.
3. Duct, outlet, and inlet sizes.
4. Pipe and valve sizes and locations.
5. Terminal units.
6. Balancing stations.
7. Position of balancing devices.

3.7 ADDITIONAL TESTS

A. Within 90 days of completing TAB, perform additional TAB to verify that balanced conditions are being maintained throughout and to correct unusual conditions.

B. Seasonal Periods: If initial TAB procedures were not performed during near-peak summer and winter conditions, perform additional TAB during near-peak summer and winter conditions.

END OF SECTION 230593

SECTION 230700

HVAC INSULATION

PART 1 - GENERAL

1.1 SUMMARY

A. Section Includes:

1. Insulation Materials:

a. Cellular glass.
b. Flexible elastomeric.
c. Mineral fiber.
d. Polyolefin.
e. Polystyrene.

2. Fire-rated insulation systems.
3. Insulating cements.
4. Adhesives.
5. Mastics.
6. Sealants.
7. Factory-applied jackets.
8. Field-applied fabric-reinforcing mesh.
9. Field-applied jackets.
10. Tapes.
11. Securements.
12. Corner angles.

B. Related Sections:

1. Division 21 Section "Fire-Suppression Systems Insulation."
2. Division 22 Section "Plumbing Insulation."
3. Division 23 Section "Metal Ducts" for duct liners.
4. SUBMITTALS

C. Product Data: For each type of product indicated.

D. Shop Drawings:

1. Detail application of protective shields, saddles, and inserts at hangers for each type of insulation and hanger.
2. Detail attachment and covering of heat tracing inside insulation.
3. Detail insulation application at pipe expansion joints for each type of insulation.
4. Detail insulation application at elbows, fittings, flanges, valves, and specialties for each type of insulation.
5. Detail removable insulation at piping specialties, equipment connections, and access panels.

6. Detail application of field-applied jackets.
7. Detail application at linkages of control devices.
8. Detail field application for each equipment type.

E. Field quality-control reports.

1.2 QUALITY ASSURANCE

A. Fire-Test-Response Characteristics: Insulation and related materials shall have fire-test-response characteristics indicated, as determined by testing identical products per ASTM E 84, by a testing and inspecting agency acceptable to authorities having jurisdiction. Factory label insulation and jacket materials and adhesive, mastic, tapes, and cement material containers, with appropriate markings of applicable testing and inspecting agency.

1. Insulation Installed Indoors: Flame-spread index of 25 or less, and smoke-developed index of 50 or less.
2. Insulation Installed Outdoors: Flame-spread index of 75 or less, and smoke-developed index of 150 or less.

PART 2 - PRODUCTS

2.1 INSULATION MATERIALS

A. Comply with requirements in Part 3 schedule articles for where insulating materials shall be applied.

B. Products shall not contain asbestos, lead, mercury, or mercury compounds.

C. Products that come in contact with stainless steel shall have a leachable chloride content of less than 50 ppm when tested according to ASTM C 871.

D. Insulation materials for use on austenitic stainless steel shall be qualified as acceptable according to ASTM C 795.

E. Foam insulation materials shall not use CFC or HCFC blowing agents in the manufacturing process.

F. Cellular Glass: Inorganic, incombustible, foamed or cellulated glass with annealed, rigid, hermetically sealed cells. Factory-applied jacket requirements are specified in "Factory-Applied Jackets" Article.

1. Products: Subject to compliance with requirements, available products that may be incorporated into the Work include, but are not limited to, the following:

a. Cell-U-Foam Corporation; Ultra-CUF.
b. Pittsburgh Corning Corporation; Foamglas Super K.

2. Block Insulation: ASTM C 552, Type I.
3. Special-Shaped Insulation: ASTM C 552, Type III.
4. Board Insulation: ASTM C 552, Type IV.
5. Preformed Pipe Insulation without Jacket: Comply with ASTM C 552, Type II, Class 1.

6. Preformed Pipe Insulation with Factory-Applied [**ASJ**] [**ASJ-SSL**]: Comply with ASTM C 552, Type II, Class 2.
7. Factory fabricate shapes according to ASTM C 450 and ASTM C 585.

G. Flexible Elastomeric: Closed-cell, sponge- or expanded-rubber materials. Comply with ASTM C 534, Type I for tubular materials and Type II for sheet materials.

1. Products: Subject to compliance with requirements, [provide the following] [provide one of the following] [available products that may be incorporated into the Work include, but are not limited to, the following]:

a. Aeroflex USA Inc.; Aerocel.
b. Armacell LLC; AP Armaflex.
c. RBX Corporation; Insul-Sheet 1800 and Insul-Tube 180.
d. <Insert manufacturer's name; product name or designation.>

H. Mineral-Fiber Blanket Insulation: Mineral or glass fibers bonded with a thermosetting resin. Comply with ASTM C 553, Type II and ASTM C 1290, Type [**I**] [**II with factory-applied vinyl jacket**] [**III with factory-applied FSK jacket**] [**III with factory-applied FSP jacket**]. Factory-applied jacket requirements are specified in "Factory-Applied Jackets" Article.

1. Products: Subject to compliance with requirements, [provide the following] [provide one of the following] [available products that may be incorporated into the Work include, but are not limited to, the following]:

a. CertainTeed Corp.; Duct Wrap.
b. Johns Manville; Microlite.
c. Knauf Insulation; Duct Wrap.
d. Manson Insulation Inc.; Alley Wrap.
e. Owens Corning; All-Service Duct Wrap.
f. <Insert manufacturer's name; product name or designation.>

I. High-Temperature, Mineral-Fiber Blanket Insulation: Mineral or glass fibers bonded with a thermosetting resin. Comply with ASTM C 553, Type V, without factory-applied jacket.

1. Products: Subject to compliance with requirements, [provide the following] [provide one of the following] [available products that may be incorporated into the Work include, but are not limited to, the following]:

a. Johns Manville; HTB 23 Spin-Glas.
b. Owens Corning; High Temperature Flexible Batt Insulations.
c. <Insert manufacturer's name; product name or designation.>

J. Mineral-Fiber Board Insulation: Mineral or glass fibers bonded with a thermosetting resin. Comply with ASTM C 612, Type IA or Type IB. For duct and plenum applications, provide insulation [**without factory-applied jacket**] [**with factory-applied ASJ**] [**with factory-applied FSK jacket**]. For equipment applications, provide insulation [**without factory-applied jacket**] [**with factory-applied ASJ**] [**with factory-applied FSK jacket**]. Factory-applied jacket requirements are specified in "Factory-Applied Jackets" Article.

1. Products: Subject to compliance with requirements, [provide the following] [provide one of the following] [available products that may be incorporated into the Work include, but are not limited to, the following]:

    a. CertainTeed Corp.; Commercial Board.
    b. Fibrex Insulations Inc.; FBX.
    c. Johns Manville; 800 Series Spin-Glas.
    d. Knauf Insulation; Insulation Board.
    e. Manson Insulation Inc.; AK Board.
    f. Owens Corning; Fiberglas 700 Series.
    g. <Insert manufacturer's name; product name or designation.>

K. High-Temperature, Mineral-Fiber Board Insulation: Mineral or glass fibers bonded with a thermosetting resin. Comply with ASTM C 612, Type III, without factory-applied jacket.

1. Products: Subject to compliance with requirements, [provide the following] [provide one of the following] [available products that may be incorporated into the Work include, but are not limited to, the following]:

    a. Fibrex Insulations Inc.; FBX.
    b. Johns Manville; 1000 Series Spin-Glas.
    c. Owens Corning; High Temperature Industrial Board Insulations.
    d. Rock Wool Manufacturing Company; Delta Board.
    e. Roxul Inc.; Roxul RW.
    f. Thermafiber; Thermafiber Industrial Felt.
    g. <Insert manufacturer's name; product name or designation.>

L. Mineral-Fiber, Preformed Pipe Insulation:

1. Products: Subject to compliance with requirements, [provide the following] [provide one of the following] [available products that may be incorporated into the Work include, but are not limited to, the following]:

    a. Fibrex Insulations Inc.; Coreplus 1200.
    b. Johns Manville; Micro-Lok.
    c. Knauf Insulation; 1000 Pipe Insulation.
    d. Manson Insulation Inc.; Alley-K.
    e. Owens Corning; Fiberglas Pipe Insulation.
    f. <Insert manufacturer's name; product name or designation.>

2. Type I, 850 deg F Materials: Mineral or glass fibers bonded with a thermosetting resin. Comply with ASTM C 547, Type I, Grade A, [**without factory-applied jacket**] [**with factory-applied ASJ**] [**with factory-applied ASJ-SSL**]. Factory-applied jacket requirements are specified in "Factory-Applied Jackets" Article.
3. Type II, 1200 deg F Materials: Mineral or glass fibers bonded with a thermosetting resin. Comply with ASTM C 547, Type II, Grade A, [**without factory-applied jacket**] [**with factory-applied ASJ**] [**with factory-applied ASJ-SSL**]. Factory-applied jacket requirements are specified in "Factory-Applied Jackets" Article.

M. Mineral-Fiber, Pipe Insulation Wicking System: Preformed pipe insulation complying with ASTM C 547, Type I, Grade A, with absorbent cloth factory applied to the entire inside surface of preformed pipe insulation and extended through the longitudinal joint to outside surface of insulation under insulation jacket. Factory apply a white, polymer, vapor-retarder jacket with self-sealing adhesive tape seam and evaporation holes running continuously along the longitudinal seam, exposing the absorbent cloth.

1. Products: Subject to compliance with requirements, [provide the following] [provide one of the following] [available products that may be incorporated into the Work include, but are not limited to, the following]:

   a. Knauf Insulation; Permawick Pipe Insulation.
   b. Owens Corning; VaporWick Pipe Insulation.
   c. <Insert manufacturer's name; product name or designation.>

N. Mineral-Fiber, Pipe and Tank Insulation: Mineral or glass fibers bonded with a thermosetting resin. Semi-rigid board material with factory-applied **ASJ** or **FSK jacket** complying with ASTM C 1393, Type II or Type IIIA Category 2, or with properties similar to ASTM C 612, Type IB. Nominal density is 2.5 lb/cu. ft. or more. Thermal conductivity (k-value) at 100 deg F is 0.29 Btu x in./h x sq. ft. x deg F or less. Factory-applied jacket requirements are specified in "Factory-Applied Jackets" Article.

1. Products: Subject to compliance with requirements, [provide the following] [provide one of the following] [available products that may be incorporated into the Work include, but are not limited to, the following]:

   a. CertainTeed Corp.; CrimpWrap.
   b. Johns Manville; MicroFlex.
   c. Knauf Insulation; Pipe and Tank Insulation.
   d. Manson Insulation Inc.; AK Flex.
   e. Owens Corning; Fiberglas Pipe and Tank Insulation.
   f. <Insert manufacturer's name; product name or designation.>

O. Polyolefin: Unicellular, polyethylene thermal plastic insulation. Comply with ASTM C 534 or ASTM C 1427, Type I, Grade 1 for tubular materials and Type II, Grade 1 for sheet materials.

1. Products: Subject to compliance with requirements, [provide the following] [provide one of the following] [available products that may be incorporated into the Work include, but are not limited to, the following]:

   a. Armacell LLC; Tubolit.
   b. Nomaco Inc.; IMCOLOCK, IMCOSHEET, NOMALOCK, and NOMAPLY.
   c. RBX Corporation; Therma-cell.
   d. <Insert manufacturer's name; product name or designation.>

P. Polystyrene: Rigid, extruded cellular polystyrene intended for use as thermal insulation. Comply with ASTM C 578, Type IV or Type XIII, except thermal conductivity (k-value) shall not exceed 0.26 Btu x in./h x sq. ft. x deg F after 180 days of aging. Fabricate shapes according to ASTM C 450 and ASTM C 585.

1. Products: Subject to compliance with requirements, [provide the following] [provide one of the following] [available products that may be incorporated into the Work include, but are not limited to, the following]:

    a. Dow Chemical Company (The); Styrofoam.
    b. Knauf Insulation; Knauf Polystyrene.
    c. <Insert manufacturer's name; product name or designation.>

2.2 FIRE-RATED INSULATION SYSTEMS

A. Fire-Rated Blanket: High-temperature, flexible, blanket insulation with FSK jacket that is tested and certified to provide a [**1**] [**2**]-hour fire rating by a NRTL acceptable to authority having jurisdiction.

1. Products: Subject to compliance with requirements, [provide the following] [provide one of the following] [available products that may be incorporated into the Work include, but are not limited to, the following]:

    a. CertainTeed Corp.; FlameChek.
    b. Johns Manville; Firetemp Wrap.
    c. Nelson Firestop Products; Nelson FSB Flameshield Blanket.
    d. Thermal Ceramics; FireMaster Duct Wrap.
    e. 3M; Fire Barrier Wrap Products.
    f. Unifrax Corporation; FyreWrap.
    g. Vesuvius; PYROSCAT FP FASTR Duct Wrap.
    h. <Insert manufacturer's name; product name or designation.>

2.3 INSULATING CEMENTS

A. Mineral-Fiber, Hydraulic-Setting Insulating and Finishing Cement: Comply with ASTM C 449/C 449M.

1. Products: Subject to compliance with requirements, [provide the following] [provide one of the following] [available products that may be incorporated into the Work include, but are not limited to, the following]:

    a. Insulco, Division of MFS, Inc.; SmoothKote.
    b. P. K. Insulation Mfg. Co., Inc.; PK No. 127, and Quik-Cote.
    c. Rock Wool Manufacturing Company; Delta One Shot.
    d. <Insert manufacturer's name; product name or designation.>

2.4 ADHESIVES

A. Materials shall be compatible with insulation materials, jackets, and substrates and for bonding insulation to itself and to surfaces to be insulated, unless otherwise indicated.

B. Cellular-Glass, Phenolic, Polyisocyanurate, and Polystyrene Adhesive: Solvent-based resin adhesive, with a service temperature range of minus 75 to plus 300 deg F.

1. Products: Subject to compliance with requirements, [provide the following] [provide one of the following] [available products that may be incorporated into the Work include, but are not limited to, the following]:

    a. Childers Products, Division of ITW; CP-96.
    b. Foster Products Corporation, H. B. Fuller Company; 81-33.
    c. <Insert manufacturer's name; product name or designation.>

2. For indoor applications, use adhesive that has a VOC content of 50 g/L or less when calculated according to 40 CFR 59, Subpart D (EPA Method 24).

C. Flexible Elastomeric and Polyolefin Adhesive: Comply with MIL-A-24179A, Type II, Class I.

1. Products: Subject to compliance with requirements, [provide the following] [provide one of the following] [available products that may be incorporated into the Work include, but are not limited to, the following]:

    a. Aeroflex USA Inc.; Aeroseal.
    b. Armacell LCC; 520 Adhesive.
    c. Foster Products Corporation, H. B. Fuller Company; 85-75.
    d. RBX Corporation; Rubatex Contact Adhesive.
    e. <Insert manufacturer's name; product name or designation.>

2. For indoor applications, use adhesive that has a VOC content of 50 g/L or less when calculated according to 40 CFR 59, Subpart D (EPA Method 24).

D. Mineral-Fiber Adhesive: Comply with MIL-A-3316C, Class 2, Grade A.

1. Products: Subject to compliance with requirements, [provide the following] [provide one of the following] [available products that may be incorporated into the Work include, but are not limited to, the following]:

    a. Childers Products, Division of ITW; CP-82.
    b. Foster Products Corporation, H. B. Fuller Company; 85-20.
    c. ITW TACC, Division of Illinois Tool Works; S-90/80.
    d. Marathon Industries, Inc.; 225.
    e. Mon-Eco Industries, Inc.; 22-25.
    f. <Insert manufacturer's name; product name or designation.>

2. For indoor applications, use adhesive that has a VOC content of 80 g/L or less when calculated according to 40 CFR 59, Subpart D (EPA Method 24).

E. Polystyrene Adhesive: Solvent- or water-based, synthetic resin adhesive with a service temperature range of minus 20 to plus 140 deg F.

1. Products: Subject to compliance with requirements, [provide the following] [provide one of the following] [available products that may be incorporated into the Work include, but are not limited to, the following]:

a. Childers Products, Division of ITW; CP-96.
b. Foster Products Corporation, H. B. Fuller Company; 97-13.
c. <Insert manufacturer's name; product name or designation.>

F. ASJ Adhesive, and FSK and PVDC Jacket Adhesive: Comply with MIL-A-3316C, Class 2, Grade A for bonding insulation jacket lap seams and joints.

1. Products: Subject to compliance with requirements, [provide the following] [provide one of the following] [available products that may be incorporated into the Work include, but are not limited to, the following]:

a. Childers Products, Division of ITW; CP-82.
b. Foster Products Corporation, H. B. Fuller Company; 85-20.
c. ITW TACC, Division of Illinois Tool Works; S-90/80.
d. Marathon Industries, Inc.; 225.
e. Mon-Eco Industries, Inc.; 22-25.
f. <Insert manufacturer's name; product name or designation.>

2. For indoor applications, use adhesive that has a VOC content of 50 g/L or less when calculated according to 40 CFR 59, Subpart D (EPA Method 24).

G. PVC Jacket Adhesive: Compatible with PVC jacket.

1. Products: Subject to compliance with requirements, [provide the following] [provide one of the following] [available products that may be incorporated into the Work include, but are not limited to, the following]:

a. Dow Chemical Company (The); 739, Dow Silicone.
b. Johns-Manville; Zeston Perma-Weld, CEEL-TITE Solvent Welding Adhesive.
c. P.I.C. Plastics, Inc.; Welding Adhesive.
d. Speedline Corporation; Speedline Vinyl Adhesive.
e. <Insert manufacturer's name; product name or designation.>

2. For indoor applications, use adhesive that has a VOC content of 50 g/L or less when calculated according to 40 CFR 59, Subpart D (EPA Method 24).

2.5 MASTICS

A. Materials shall be compatible with insulation materials, jackets, and substrates; comply with MIL-C-19565C, Type II.

1. For indoor applications, use mastics that have a VOC content of <**Insert value**> g/L or less when calculated according to 40 CFR 59, Subpart D (EPA Method 24).

B. Vapor-Barrier Mastic: Water based; suitable for indoor and outdoor use on below ambient services.

1. Products: Subject to compliance with requirements, [provide the following] [provide one of the following] [available products that may be incorporated into the Work include, but are not limited to, the following]:

    a. Childers Products, Division of ITW; CP-35.
    b. Foster Products Corporation, H. B. Fuller Company; 30-90.
    c. ITW TACC, Division of Illinois Tool Works; CB-50.
    d. Marathon Industries, Inc.; 590.
    e. Mon-Eco Industries, Inc.; 55-40.
    f. Vimasco Corporation; 749.
    g. <Insert manufacturer's name; product name or designation.>

2. Water-Vapor Permeance: ASTM E 96, Procedure B, 0.013 perm at 43-mil dry film thickness.
3. Service Temperature Range: Minus 20 to plus 180 deg F.
4. Solids Content: ASTM D 1644, 59 percent by volume and 71 percent by weight.
5. Color: White.

C. Breather Mastic: Water based; suitable for indoor and outdoor use on above ambient services.

1. Products: Subject to compliance with requirements, [provide the following] [provide one of the following] [available products that may be incorporated into the Work include, but are not limited to, the following]:

    a. Childers Products, Division of ITW; CP-10.
    b. Foster Products Corporation, H. B. Fuller Company; 35-00.
    c. ITW TACC, Division of Illinois Tool Works; CB-05/15.
    d. Marathon Industries, Inc.; 550.
    e. Mon-Eco Industries, Inc.; 55-50.
    f. Vimasco Corporation; WC-1/WC-5.
    g. <Insert manufacturer's name; product name or designation.>

2. Water-Vapor Permeance: ASTM F 1249, 3 perms at 0.0625-inch dry film thickness.
3. Service Temperature Range: Minus 20 to plus 200 deg F.
4. Solids Content: 63 percent by volume and 73 percent by weight.
5. Color: White.

2.6 SEALANTS

A. Joint Sealants:

1. Joint Sealants for Cellular-Glass Products: Subject to compliance with requirements, [provide the following] [provide one of the following] [available products that may be incorporated into the Work include, but are not limited to, the following]:

    a. Childers Products, Division of ITW; CP-76.
    b. Foster Products Corporation, H. B. Fuller Company; 30-45.
    c. Marathon Industries, Inc.; 405.
    d. Mon-Eco Industries, Inc.; 44-05.
    e. Pittsburgh Corning Corporation; Pittseal 444.

f. Vimasco Corporation; 750.
g. <Insert manufacturer's name; product name or designation.>

2. Joint Sealants for Polystyrene Products: Subject to compliance with requirements, [provide the following] [provide one of the following] [available products that may be incorporated into the Work include, but are not limited to, the following]:

a. Childers Products, Division of ITW; CP-70.
b. Foster Products Corporation, H. B. Fuller Company; 30-45/30-46.
c. Marathon Industries, Inc.; 405.
d. Mon-Eco Industries, Inc.; 44-05.
e. Vimasco Corporation; 750.
f. <Insert manufacturer's name; product name or designation.>

3. Materials shall be compatible with insulation materials, jackets, and substrates.
4. Permanently flexible, elastomeric sealant.
5. Service Temperature Range: Minus 100 to plus 300 deg F.
6. Color: White or gray.
7. For indoor applications, use sealants that have a VOC content of 250 g/L or less when calculated according to 40 CFR 59, Subpart D (EPA Method 24).

B. FSK and Metal Jacket Flashing Sealants:

1. Products: Subject to compliance with requirements, [provide the following] [provide one of the following] [available products that may be incorporated into the Work include, but are not limited to, the following]:

a. Childers Products, Division of ITW; CP-76-8.
b. Foster Products Corporation, H. B. Fuller Company; 95-44.
c. Marathon Industries, Inc.; 405.
d. Mon-Eco Industries, Inc.; 44-05.
e. Vimasco Corporation; 750.
f. <Insert manufacturer's name; product name or designation.>

2. Materials shall be compatible with insulation materials, jackets, and substrates.
3. Fire- and water-resistant, flexible, elastomeric sealant.
4. Service Temperature Range: Minus 40 to plus 250 deg F.
5. Color: Aluminum.
6. For indoor applications, use sealants that have a VOC content of 250 g/L or less when calculated according to 40 CFR 59, Subpart D (EPA Method 24).

C. ASJ Flashing Sealants, and Vinyl, PVDC, and PVC Jacket Flashing Sealants:

1. Products: Subject to compliance with requirements, [provide the following] [provide one of the following] [available products that may be incorporated into the Work include, but are not limited to, the following]:

a. Childers Products, Division of ITW; CP-76.
b. <Insert manufacturer's name; product name or designation.>

2. Materials shall be compatible with insulation materials, jackets, and substrates.
3. Fire- and water-resistant, flexible, elastomeric sealant.
4. Service Temperature Range: Minus 40 to plus 250 deg F.
5. Color: White.
6. For indoor applications, use sealants that have a VOC content of 250 g/L or less when calculated according to 40 CFR 59, Subpart D (EPA Method 24).

2.7 FACTORY-APPLIED JACKETS

A. Insulation system schedules indicate factory-applied jackets on various applications. When factory-applied jackets are indicated, comply with the following:

1. ASJ: White, kraft-paper, fiberglass-reinforced scrim with aluminum-foil backing; complying with ASTM C 1136, Type I.
2. ASJ-SSL: ASJ with self-sealing, pressure-sensitive, acrylic-based adhesive covered by a removable protective strip; complying with ASTM C 1136, Type I.
3. FSK Jacket: Aluminum-foil, fiberglass-reinforced scrim with kraft-paper backing; complying with ASTM C 1136, Type II.
4. FSP Jacket: Aluminum-foil, fiberglass-reinforced scrim with polyethylene backing; complying with ASTM C 1136, Type II.
5. PVDC Jacket for Indoor Applications: 4-mil- thick, white PVDC biaxially oriented barrier film with a permeance at 0.02 perms when tested according to ASTM E 96 and with a flame-spread index of 5 and a smoke-developed index of 20 when tested according to ASTM E 84.

    a. Products: Subject to compliance with requirements, [provide the following] [provide one of the following] [available products that may be incorporated into the Work include, but are not limited to, the following]:

        1) Dow Chemical Company (The); Saran 540 Vapor Retarder Film and Saran 560 Vapor Retarder Film.

6. PVDC Jacket for Outdoor Applications: 6-mil- thick, white PVDC biaxially oriented barrier film with a permeance at 0.01 perms when tested according to ASTM E 96 and with a flame-spread index of 5 and a smoke-developed index of 25 when tested according to ASTM E 84.

    a. Products: Subject to compliance with requirements, [provide the following] [provide one of the following] [available products that may be incorporated into the Work include, but are not limited to, the following]:

        1) Dow Chemical Company (The); Saran 540 Vapor Retarder Film and Saran 560 Vapor Retarder Film.

7. PVDC-SSL Jacket: PVDC jacket with a self-sealing, pressure-sensitive, acrylic-based adhesive covered by a removable protective strip.

    a. Products: Subject to compliance with requirements, [provide the following] [provide one of the following] [available products that may be incorporated into the Work include, but are not limited to, the following]:

1) Dow Chemical Company (The); Saran 540 Vapor Retarder Film and Saran 560 Vapor Retarder Film.

8. Vinyl Jacket: White vinyl with a permeance of 1.3 perms when tested according to ASTM E 96, Procedure A, and complying with NFPA 90A and NFPA 90B.

2.8 FIELD-APPLIED FABRIC-REINFORCING MESH

A. Woven Polyester Fabric: Approximately 1 oz./sq. yd. with a thread count of 10 strands by 10 strands/sq. inch, in a Leno weave, for duct, equipment, and pipe.

1. Products: Subject to compliance with requirements, [provide the following] [provide one of the following] [available products that may be incorporated into the Work include, but are not limited to, the following]:

a. Foster Products Corporation, H. B. Fuller Company; Mast-A-Fab.
b. Vimasco Corporation; Elastafab 894.
c. <Insert manufacturer's name; product name or designation.>

2.9 FIELD-APPLIED JACKETS

A. Field-applied jackets shall comply with ASTM C 921, Type I, unless otherwise indicated.

B. FSK Jacket: Aluminum-foil-face, fiberglass-reinforced scrim with kraft-paper backing.

C. PVC Jacket: High-impact-resistant, UV-resistant PVC complying with ASTM D 1784, Class 16354-C; thickness as scheduled; roll stock ready for shop or field cutting and forming. Thickness is indicated in field-applied jacket schedules.

1. Products: Subject to compliance with requirements, [provide the following] [provide one of the following] [available products that may be incorporated into the Work include, but are not limited to, the following]:

a. Johns Manville; Zeston.
b. P.I.C. Plastics, Inc.; FG Series.
c. Proto PVC Corporation; LoSmoke.
d. Speedline Corporation; SmokeSafe.
e. <Insert manufacturer's name; product name or designation.>

2. Adhesive: As recommended by jacket material manufacturer.
3. Color: [White] [Color-code jackets based on system. Color as selected by Architect].
4. Factory-fabricated fitting covers to match jacket if available; otherwise, field fabricate.

a. Shapes: 45- and 90-degree, short- and long-radius elbows, tees, valves, flanges, unions, reducers, end caps, soil-pipe hubs, traps, mechanical joints, and P-trap and supply covers for lavatories.

5. Factory-fabricated tank heads and tank side panels.

D. Aluminum Jacket: Comply with ASTM B 209, Alloy 3003, 3005, 3105 or 5005, Temper H-14.

1. Products: Subject to compliance with requirements, [provide the following] [provide one of the following] [available products that may be incorporated into the Work include, but are not limited to, the following]:

   a. Childers Products, Division of ITW; Metal Jacketing Systems.
   b. PABCO Metals Corporation; Surefit.
   c. RPR Products, Inc.; Insul-Mate.
   d. <Insert manufacturer's name; product name or designation.>

2. [Sheet and roll stock ready for shop or field sizing] [Factory cut and rolled to size].
3. Finish and thickness are indicated in field-applied jacket schedules.
4. Moisture Barrier for Indoor Applications: [**1-mil-** thick, heat-bonded polyethylene and kraft paper] [**3-mil-** thick, heat-bonded polyethylene and kraft paper] [**2.5-mil-** thick Polysurlyn].
5. Moisture Barrier for Outdoor Applications: [**3-mil-** thick, heat-bonded polyethylene and kraft paper] [**2.5-mil-** thick Polysurlyn].
6. Factory-Fabricated Fitting Covers:

   a. Same material, finish, and thickness as jacket.
   b. Preformed 2-piece or gore, 45- and 90-degree, short- and long-radius elbows.
   c. Tee covers.
   d. Flange and union covers.
   e. End caps.
   f. Beveled collars.
   g. Valve covers.
   h. Field fabricate fitting covers only if factory-fabricated fitting covers are not available.

E. Self-Adhesive Outdoor Jacket: 60-mil- thick, laminated vapor barrier and waterproofing membrane for installation over insulation located aboveground outdoors; consisting of a rubberized bituminous resin on a crosslaminated polyethylene film covered with **white or stucco-embossed** aluminum-foil facing.

1. Products: Subject to compliance with requirements, [provide the following] [provide one of the following] [available products that may be incorporated into the Work include, but are not limited to, the following]:

   a. Polyguard; Alumaguard 60.
   b. <Insert manufacturer's name; product name or designation.>

F. PVDC Jacket for Indoor Applications: 4-mil- thick, white PVDC biaxially oriented barrier film with a permeance at 0.02 perms when tested according to ASTM E 96 and with a flame-spread index of 5 and a smoke-developed index of 20 when tested according to ASTM E 84.

1. Products: Subject to compliance with requirements, [provide the following] [provide one of the following] [available products that may be incorporated into the Work include, but are not limited to, the following]:

   a. Dow Chemical Company (The), Saran 540 Vapor Retarder Film.
   b. <Insert manufacturer's name; product name or designation.>

G. PVDC Jacket for Outdoor Applications: 6-mil- thick, white PVDC biaxially oriented barrier film with a permeance at 0.01 perms when tested according to ASTM E 96 and with a flame-spread index of 5 and a smoke-developed index of 25 when tested according to ASTM E 84.

1. Products: Subject to compliance with requirements, [provide the following] [provide one of the following] [available products that may be incorporated into the Work include, but are not limited to, the following]:

a. Dow Chemical Company (The), Saran 560 Vapor Retarder Film.
b. <Insert manufacturer's name; product name or designation.>

H. PVDC-SSL Jacket: PVDC jacket with a self-sealing, pressure-sensitive, acrylic-based adhesive covered by a removable protective strip.

1. Products: Subject to compliance with requirements, [provide the following] [provide one of the following] [available products that may be incorporated into the Work include, but are not limited to, the following]:

a. Dow Chemical Company (The); Saran 540 Vapor Retarder Film and Saran 560 Vapor Retarder Film.
b. <Insert manufacturer's name; product name or designation.>

2.10 TAPES

A. ASJ Tape: White vapor-retarder tape matching factory-applied jacket with acrylic adhesive, complying with ASTM C 1136.

1. Products: Subject to compliance with requirements, [provide the following] [provide one of the following] [available products that may be incorporated into the Work include, but are not limited to, the following]:

a. Avery Dennison Corporation, Specialty Tapes Division; Fasson 0835.
b. Compac Corp.; 104 and 105.
c. Ideal Tape Co., Inc., an American Biltrite Company; 428 AWF ASJ.
d. Venture Tape; 1540 CW Plus, 1542 CW Plus, and 1542 CW Plus/SQ.
e. <Insert manufacturer's name; product name or designation.>

2. Width: 3 inches.
3. Thickness: 11.5 mils.
4. Adhesion: 90 ounces force/inch in width.
5. Elongation: 2 percent.
6. Tensile Strength: 40 lbf/inch in width.
7. ASJ Tape Disks and Squares: Precut disks or squares of ASJ tape.

B. FSK Tape: Foil-face, vapor-retarder tape matching factory-applied jacket with acrylic adhesive; complying with ASTM C 1136.

1. Products: Subject to compliance with requirements, [provide the following] [provide one of the following] [available products that may be incorporated into the Work include, but are not limited to, the following]:

    a. Avery Dennison Corporation, Specialty Tapes Division; Fasson 0827.
    b. Compac Corp.; 110 and 111.
    c. Ideal Tape Co., Inc., an American Biltrite Company; 491 AWF FSK.
    d. Venture Tape; 1525 CW, 1528 CW, and 1528 CW/SQ.
    e. <Insert manufacturer's name; product name or designation.>

2. Width: 3 inches.
3. Thickness: 6.5 mils.
4. Adhesion: 90 ounces force/inch in width.
5. Elongation: 2 percent.
6. Tensile Strength: 40 lbf/inch in width.
7. FSK Tape Disks and Squares: Precut disks or squares of FSK tape.

C. PVC Tape: White vapor-retarder tape matching field-applied PVC jacket with acrylic adhesive. Suitable for indoor and outdoor applications.

1. Products: Subject to compliance with requirements, [provide the following] [provide one of the following] [available products that may be incorporated into the Work include, but are not limited to, the following]:

    a. Avery Dennison Corporation, Specialty Tapes Division; Fasson 0555.
    b. Compac Corp.; 130.
    c. Ideal Tape Co., Inc., an American Biltrite Company; 370 White PVC tape.
    d. Venture Tape; 1506 CW NS.
    e. <Insert manufacturer's name; product name or designation.>

2. Width: 2 inches.
3. Thickness: 6 mils.
4. Adhesion: 64 ounces force/inch in width.
5. Elongation: 500 percent.
6. Tensile Strength: 18 lbf/inch in width.

D. Aluminum-Foil Tape: Vapor-retarder tape with acrylic adhesive.

1. Products: Subject to compliance with requirements, [provide the following] [provide one of the following] [available products that may be incorporated into the Work include, but are not limited to, the following]:

    a. Avery Dennison Corporation, Specialty Tapes Division; Fasson 0800.
    b. Compac Corp.; 120.
    c. Ideal Tape Co., Inc., an American Biltrite Company; 488 AWF.
    d. Venture Tape; 3520 CW.
    e. <Insert manufacturer's name; product name or designation.>

2. Width: 2 inches.
3. Thickness: 3.7 mils.
4. Adhesion: 100 ounces force/inch in width.
5. Elongation: 5 percent.
6. Tensile Strength: 34 lbf/inch in width.

E. PVDC Tape for Indoor Applications: White vapor-retarder PVDC tape with acrylic adhesive.

1. Products: Subject to compliance with requirements, [provide the following] [provide one of the following] [available products that may be incorporated into the Work include, but are not limited to, the following]:

a. Dow Chemical Company (The); Saran 540 Vapor Retarder Tape.
b. <Insert manufacturer's name; product name or designation.>

2. Width: 3 inches.
3. Film Thickness: 4 mils.
4. Adhesive Thickness: 1.5 mils.
5. Elongation at Break: 145 percent.
6. Tensile Strength: 55 lbf/inch in width.

F. PVDC Tape for Outdoor Applications: White vapor-retarder PVDC tape with acrylic adhesive.

1. Products: Subject to compliance with requirements, [provide the following] [provide one of the following] [available products that may be incorporated into the Work include, but are not limited to, the following]:

a. Dow Chemical Company (The); Saran 560 Vapor Retarder Tape.
b. <Insert manufacturer's name; product name or designation.>

2. Width: 3 inches.
3. Film Thickness: 6 mils.
4. Adhesive Thickness: 1.5 mils.
5. Elongation at Break: 145 percent.
6. Tensile Strength: 55 lbf/inch in width.

2.11 SECUREMENTS

A. Aluminum Bands: ASTM B 209, Alloy 3003, 3005, 3105, or 5005; Temper H-14, 0.020 inch thick, **3/4 inch** wide with **wing or closed seal**.

1. Products: Subject to compliance with requirements, [provide the following] [provide one of the following] [available products that may be incorporated into the Work include, but are not limited to, the following]:

a. Childers Products; Bands.
b. PABCO Metals Corporation; Bands.
c. RPR Products, Inc.; Bands.
d. <Insert manufacturer's name; product name or designation.>

B. Insulation Pins and Hangers:

1. Metal, Adhesively Attached, Perforated-Base Insulation Hangers: Baseplate welded to projecting spindle that is capable of holding insulation, of thickness indicated, securely in position indicated when self-locking washer is in place. Comply with the following requirements:

   a. Products: Subject to compliance with requirements, [provide the following] [provide one of the following] [available products that may be incorporated into the Work include, but are not limited to, the following]:

      1) AGM Industries, Inc.; Tactoo Insul-Hangers, Series T.
      2) GEMCO; Perforated Base.
      3) Midwest Fasteners, Inc.; Spindle.

   b. Baseplate: Perforated, galvanized carbon-steel sheet, 0.030 inch thick by 2 inches square.
   c. Spindle: **Copper- or zinc-coated, low carbon steel**, **Aluminum,** or **Stainless steel**, fully annealed, 0.106-inch- diameter shank, length to suit depth of insulation indicated.
   d. Adhesive: Recommended by hanger manufacturer. Product with demonstrated capability to bond insulation hanger securely to substrates indicated without damaging insulation, hangers, and substrates.

2. Nonmetal, Adhesively Attached, Perforated-Base Insulation Hangers: Baseplate fastened to projecting spindle that is capable of holding insulation, of thickness indicated, securely in position indicated when self-locking washer is in place. Comply with the following requirements:

   a. Products: Subject to compliance with requirements, [provide the following] [provide one of the following] [available products that may be incorporated into the Work include, but are not limited to, the following]:

      1) GEMCO; Nylon Hangers.
      2) Midwest Fasteners, Inc.; Nylon Insulation Hangers.

   b. Baseplate: Perforated, nylon sheet, 0.030 inch thick by 1-1/2 inches in diameter.
   c. Spindle: Nylon, 0.106-inch- diameter shank, length to suit depth of insulation indicated, up to 2-1/2 inches.
   d. Adhesive: Recommended by hanger manufacturer. Product with demonstrated capability to bond insulation hanger securely to substrates indicated without damaging insulation, hangers, and substrates.

3. Self-Sticking-Base Insulation Hangers: Baseplate welded to projecting spindle that is capable of holding insulation, of thickness indicated, securely in position indicated when self-locking washer is in place. Comply with the following requirements:

   a. Products: Subject to compliance with requirements, [provide the following] [provide one of the following] [available products that may be incorporated into the Work include, but are not limited to, the following]:

      1) AGM Industries, Inc.; Tactoo Insul-Hangers, Series TSA.
      2) GEMCO; Press and Peel.

3) Midwest Fasteners, Inc.; Self Stick.

b. Baseplate: Galvanized carbon-steel sheet, 0.030 inch thick by 2 inches square.
c. Spindle **Copper- or zinc-coated, low carbon steel**, **Aluminum,** or **Stainless steel**, fully annealed, 0.106-inch- diameter shank, length to suit depth of insulation indicated.
d. Adhesive-backed base with a peel-off protective cover.

4. Insulation-Retaining Washers: Self-locking washers formed from 0.016-inch- thick, **galvanized-steel** sheet, with beveled edge sized as required to hold insulation securely in place but not less than 1-1/2 inches in diameter.

a. Products: Subject to compliance with requirements, [provide the following] [provide one of the following] [available products that may be incorporated into the Work include, but are not limited to, the following]:

1) AGM Industries, Inc.; RC-150.
2) GEMCO; R-150.
3) Midwest Fasteners, Inc.; WA-150.
4) Nelson Stud Welding; Speed Clips.

b. Protect ends with capped self-locking washers incorporating a spring steel insert to ensure permanent retention of cap in exposed locations.

5. Nonmetal Insulation-Retaining Washers: Self-locking washers formed from 0.016-inch- thick nylon sheet, with beveled edge sized as required to hold insulation securely in place but not less than 1-1/2 inches in diameter.

a. Products: Subject to compliance with requirements, [provide the following] [provide one of the following] [available products that may be incorporated into the Work include, but are not limited to, the following]:

1) GEMCO.
2) Midwest Fasteners, Inc.

C. Staples: Outward-clinching insulation staples, nominal 3/4-inch- wide, stainless steel or Monel.

D. Wire: **0.080-inch** nickel-copper alloy, **0.062-inch** soft-annealed, stainless steel, **0.062-inch** soft-annealed, or galvanized steel.

1. Manufacturers: Subject to compliance with requirements, [provide products by one of the following] [available manufacturers offering products that may be incorporated into the Work include, but are not limited to, the following]:

a. C & F Wire.
b. Childers Products.
c. PABCO Metals Corporation.
d. RPR Products, Inc.

2.12 CORNER ANGLES

A. PVC Corner Angles: 30 mils thick, minimum 1 by 1 inch, PVC according to ASTM D 1784, Class 16354-C. White or color-coded to match adjacent surface.

B. Aluminum Corner Angles: 0.040 inch thick, minimum 1 by 1 inch, aluminum according to ASTM B 209, Alloy 3003, 3005, 3105 or 5005; Temper H-14.

PART 3 - EXECUTION

1. PREPARATION

   a. Surface Preparation: Clean and dry surfaces to receive insulation. Remove materials that will adversely affect insulation application.
   b. Coordinate insulation installation with the trade installing heat tracing. Comply with requirements for heat tracing that apply to insulation.
   c. Mix insulating cements with clean potable water; if insulating cements are to be in contact with stainless-steel surfaces, use demineralized water.

2. GENERAL INSTALLATION REQUIREMENTS

   a. Install insulation materials, accessories, and finishes with smooth, straight, and even surfaces; free of voids throughout the length of equipment, ducts and fittings, and piping including fittings, valves, and specialties.
   b. Install insulation materials, forms, vapor barriers or retarders, jackets, and thicknesses required for each item of equipment, duct system, and pipe system as specified in insulation system schedules.
   c. Install accessories compatible with insulation materials and suitable for the service. Install accessories that do not corrode, soften, or otherwise attack insulation or jacket in either wet or dry state.
   d. Install insulation with longitudinal seams at top and bottom of horizontal runs.
   e. Install multiple layers of insulation with longitudinal and end seams staggered.
   f. Do not weld brackets, clips, or other attachment devices to piping, fittings, and specialties.
   g. Keep insulation materials dry during application and finishing.
   h. Install insulation with tight longitudinal seams and end joints. Bond seams and joints with adhesive recommended by insulation material manufacturer.
   i. Install insulation with least number of joints practical.
   j. Where vapor barrier is indicated, seal joints, seams, and penetrations in insulation at hangers, supports, anchors, and other projections with vapor-barrier mastic.

      1) Install insulation continuously through hangers and around anchor attachments.
      2) For insulation application where vapor barriers are indicated, extend insulation on anchor legs from point of attachment to supported item to point of attachment to structure. Taper and seal ends at attachment to structure with vapor-barrier mastic.
      3) Install insert materials and install insulation to tightly join the insert. Seal insulation to insulation inserts with adhesive or sealing compound recommended by insulation material manufacturer.

4) Cover inserts with jacket material matching adjacent pipe insulation. Install shields over jacket, arranged to protect jacket from tear or puncture by hanger, support, and shield.

k. Apply adhesives, mastics, and sealants at manufacturer's recommended coverage rate and wet and dry film thicknesses.

l. Install insulation with factory-applied jackets as follows:

1) Draw jacket tight and smooth.
2) Cover circumferential joints with 3-inch- wide strips, of same material as insulation jacket. Secure strips with adhesive and outward clinching staples along both edges of strip, spaced 4 inches o.c.
3) Overlap jacket longitudinal seams at least 1-1/2 inches. Install insulation with longitudinal seams at bottom of pipe. Clean and dry surface to receive self-sealing lap. Staple laps with outward clinching staples along edge at **2 inches** o.c.

a) For below ambient services, apply vapor-barrier mastic over staples.

4) Cover joints and seams with tape as recommended by insulation material manufacturer to maintain vapor seal.
5) Where vapor barriers are indicated, apply vapor-barrier mastic on seams and joints and at ends adjacent to duct and pipe flanges and fittings.

m. Cut insulation in a manner to avoid compressing insulation more than 75 percent of its nominal thickness.

n. Finish installation with systems at operating conditions. Repair joint separations and cracking due to thermal movement.

o. Repair damaged insulation facings by applying same facing material over damaged areas. Extend patches at least 4 inches beyond damaged areas. Adhere, staple, and seal patches similar to butt joints.

p. For above ambient services, do not install insulation to the following:

1) Vibration-control devices.
2) Testing agency labels and stamps.
3) Nameplates and data plates.
4) Manholes.
5) Handholes.
6) Cleanouts.

3. PENETRATIONS

a. Insulation Installation at Roof Penetrations: Install insulation continuously through roof penetrations.

1) Seal penetrations with flashing sealant.
2) For applications requiring only indoor insulation, terminate insulation above roof surface and seal with joint sealant. For applications requiring indoor and outdoor insulation, install insulation for outdoor applications tightly joined to indoor insulation ends. Seal joint with joint sealant.

3) Extend jacket of outdoor insulation outside roof flashing at least 2 inches below top of roof flashing.
4) Seal jacket to roof flashing with flashing sealant.

b. Insulation Installation at Underground Exterior Wall Penetrations: Terminate insulation flush with sleeve seal. Seal terminations with flashing sealant.
c. Insulation Installation at Aboveground Exterior Wall Penetrations: Install insulation continuously through wall penetrations.

1) Seal penetrations with flashing sealant.
2) For applications requiring only indoor insulation, terminate insulation inside wall surface and seal with joint sealant. For applications requiring indoor and outdoor insulation, install insulation for outdoor applications tightly joined to indoor insulation ends. Seal joint with joint sealant.
3) Extend jacket of outdoor insulation outside wall flashing and overlap wall flashing at least 2 inches.
4) Seal jacket to wall flashing with flashing sealant.

d. Insulation Installation at Interior Wall and Partition Penetrations (That Are Not Fire Rated): Install insulation continuously through walls and partitions.
e. Insulation Installation at Fire-Rated Wall and Partition Penetrations: Install insulation continuously through penetrations of fire-rated walls and partitions. Terminate insulation at fire damper sleeves for fire-rated wall and partition penetrations. Externally insulate damper sleeves to match adjacent insulation and overlap duct insulation at least 2 inches.

1) Comply with requirements in Division 07 Section "Penetration Firestopping" firestopping and fire-resistive joint sealers.

f. Insulation Installation at Floor Penetrations:

1) Duct: Install insulation continuously through floor penetrations that are not fire rated. For penetrations through fire-rated assemblies, terminate insulation at fire damper sleeves and externally insulate damper sleeve beyond floor to match adjacent duct insulation. Overlap damper sleeve and duct insulation at least 2 inches.
2) Pipe: Install insulation continuously through floor penetrations.
3) Seal penetrations through fire-rated assemblies. Comply with requirements in Division 07 Section "Penetration Firestopping."

4. EQUIPMENT, TANK, AND VESSEL INSULATION INSTALLATION

a. Mineral Fiber, Pipe and Tank Insulation Installation for Tanks and Vessels: Secure insulation with adhesive and anchor pins and speed washers.

5. Apply adhesives according to manufacturer's recommended coverage rates per unit area, for **100** percent coverage of tank and vessel surfaces.
6. Groove and score insulation materials to fit as closely as possible to equipment, including contours. Bevel insulation edges for cylindrical surfaces for tight joints. Stagger end joints.
7. Protect exposed corners with secured corner angles.
8. Install adhesively attached or self-sticking insulation hangers and speed washers on sides of tanks and vessels as follows:

    a. Do not weld anchor pins to ASME-labeled pressure vessels.
    b. Select insulation hangers and adhesive that are compatible with service temperature and with substrate.
    c. On tanks and vessels, maximum anchor-pin spacing is 3 inches from insulation end joints, and 16 inches o.c. in both directions.
    d. Do not overcompress insulation during installation.
    e. Cut and miter insulation segments to fit curved sides and domed heads of tanks and vessels.
    f. Impale insulation over anchor pins and attach speed washers.
    g. Cut excess portion of pins extending beyond speed washers or bend parallel with insulation surface. Cover exposed pins and washers with tape matching insulation facing.

9. Secure each layer of insulation with stainless-steel or aluminum bands. Select band material compatible with insulation materials.
10. Where insulation hangers on equipment and vessels are not permitted or practical and where insulation support rings are not provided, install a girdle network for securing insulation. Stretch prestressed aircraft cable around the diameter of vessel and make taut with clamps, turnbuckles, or breather springs. Place one circumferential girdle around equipment approximately 6 inches from each end. Install wire or cable between two circumferential girdles 12 inches o.c. Install a wire ring around each end and around outer periphery of center openings, and stretch prestressed aircraft cable radially from the wire ring to nearest circumferential girdle. Install additional circumferential girdles along the body of equipment or tank at a minimum spacing of 48 inches o.c. Use this network for securing insulation with tie wire or bands.
11. Stagger joints between insulation layers at least 3 inches.
12. Install insulation in removable segments on equipment access doors, manholes, handholes, and other elements that require frequent removal for service and inspection.
13. Bevel and seal insulation ends around manholes, handholes, ASME stamps, and nameplates.
14. For equipment with surface temperatures below ambient, apply mastic to open ends, joints, seams, breaks, and punctures in insulation.

B. Flexible Elastomeric Thermal Insulation Installation for Tanks and Vessels: Install insulation over entire surface of tanks and vessels.

1. Apply 100 percent coverage of adhesive to surface with manufacturer's recommended adhesive.
2. Seal longitudinal seams and end joints.

C. Insulation Installation on Pumps:

1. Fabricate metal boxes lined with insulation. Fit boxes around pumps and coincide box joints with splits in pump casings. Fabricate joints with outward bolted flanges. Bolt flanges on 6-inch centers, starting at corners. Install 3/8-inch- diameter fasteners with wing nuts. Alternatively, secure the box sections together using a latching mechanism.
2. Fabricate boxes from [galvanized steel] [aluminum] [stainless steel], at least [**0.040 inch**] [**0.050 inch**] [**0.060 inch**] thick.
3. For below ambient services, install a vapor barrier at seams, joints, and penetrations. Seal between flanges with replaceable gasket material to form a vapor barrier.

3.2 GENERAL PIPE INSULATION INSTALLATION

A. Requirements in this article generally apply to all insulation materials except where more specific requirements are specified in various pipe insulation material installation articles.

B. Insulation Installation on Fittings, Valves, Strainers, Flanges, and Unions:

1. Install insulation over fittings, valves, strainers, flanges, unions, and other specialties with continuous thermal and vapor-retarder integrity, unless otherwise indicated.
2. Insulate pipe elbows using preformed fitting insulation or mitered fittings made from same material and density as adjacent pipe insulation. Each piece shall be butted tightly against adjoining piece and bonded with adhesive. Fill joints, seams, voids, and irregular surfaces with insulating cement finished to a smooth, hard, and uniform contour that is uniform with adjoining pipe insulation.

3. Insulate tee fittings with preformed fitting insulation or sectional pipe insulation of same material and thickness as used for adjacent pipe. Cut sectional pipe insulation to fit. Butt each section closely to the next and hold in place with tie wire. Bond pieces with adhesive.
4. Insulate valves using preformed fitting insulation or sectional pipe insulation of same material, density, and thickness as used for adjacent pipe. Overlap adjoining pipe insulation by not less than two times the thickness of pipe insulation, or one pipe diameter, whichever is thicker. For valves, insulate up to and including the bonnets, valve stuffing-box studs, bolts, and nuts. Fill joints, seams, and irregular surfaces with insulating cement.
5. Insulate strainers using preformed fitting insulation or sectional pipe insulation of same material, density, and thickness as used for adjacent pipe. Overlap adjoining pipe insulation by not less than two times the thickness of pipe insulation, or one pipe diameter, whichever is thicker. Fill joints, seams, and irregular surfaces with insulating cement. Insulate strainers so strainer basket flange or plug can be easily removed and replaced without damaging the insulation and jacket. Provide a removable reusable insulation cover. For below ambient services, provide a design that maintains vapor barrier.
6. Insulate flanges and unions using a section of oversized preformed pipe insulation. Overlap adjoining pipe insulation by not less than two times the thickness of pipe insulation, or one pipe diameter, whichever is thicker.
7. Cover segmented insulated surfaces with a layer of finishing cement and coat with a mastic. Install vapor-barrier mastic for below ambient services and a breather mastic for above ambient services. Reinforce the mastic with fabric-reinforcing mesh. Trowel the mastic to a smooth and well-shaped contour.
8. For services not specified to receive a field-applied jacket except for flexible elastomeric and polyolefin, install fitted PVC cover over elbows, tees, strainers, valves, flanges, and unions. Terminate ends with PVC end caps. Tape PVC covers to adjoining insulation facing using PVC tape.
9. Stencil or label the outside insulation jacket of each union with the word "UNION." Match size and color of pipe labels.

C. Insulate instrument connections for thermometers, pressure gages, pressure temperature taps, test connections, flow meters, sensors, switches, and transmitters on insulated pipes, vessels, and equipment. Shape insulation at these connections by tapering it to and around the connection with insulating cement and finish with finishing cement, mastic, and flashing sealant.

D. Install removable insulation covers at locations indicated. Installation shall conform to the following:

1. Make removable flange and union insulation from sectional pipe insulation of same thickness as that on adjoining pipe. Install same insulation jacket as adjoining pipe insulation.
2. When flange and union covers are made from sectional pipe insulation, extend insulation from flanges or union long at least two times the insulation thickness over adjacent pipe insulation on each side of flange or union. Secure flange cover in place with stainless-steel or aluminum bands. Select band material compatible with insulation and jacket.
3. Construct removable valve insulation covers in same manner as for flanges except divide the two-part section on the vertical center line of valve body.
4. When covers are made from block insulation, make two halves, each consisting of mitered blocks wired to stainless-steel fabric. Secure this wire frame, with its attached insulation, to flanges with tie wire. Extend insulation at least 2 inches over adjacent pipe insulation on each side of valve. Fill space between flange or union cover and pipe insulation with insulating cement. Finish cover assembly with insulating cement applied in two coats. After first coat is dry, apply and trowel second coat to a smooth finish.

5. Unless a PVC jacket is indicated in field-applied jacket schedules, finish exposed surfaces with a metal jacket.

3.3 CELLULAR-GLASS INSULATION INSTALLATION

A. Insulation Installation on Straight Pipes and Tubes:

1. Secure each layer of insulation to pipe with wire or bands and tighten bands without deforming insulation materials.
2. Where vapor barriers are indicated, seal longitudinal seams, end joints, and protrusions with vapor-barrier mastic and joint sealant.
3. For insulation with factory-applied jackets on above ambient services, secure laps with outward clinched staples at 6 inches o.c.
4. For insulation with factory-applied jackets on below ambient services, do not staple longitudinal tabs but secure tabs with additional adhesive as recommended by insulation material manufacturer and seal with vapor-barrier mastic and flashing sealant.

B. Insulation Installation on Pipe Flanges:

1. Install preformed pipe insulation to outer diameter of pipe flange.
2. Make width of insulation section same as overall width of flange and bolts, plus twice the thickness of pipe insulation.
3. Fill voids between inner circumference of flange insulation and outer circumference of adjacent straight pipe segments with cut sections of cellular-glass block insulation of same thickness as pipe insulation.
4. Install jacket material with manufacturer's recommended adhesive, overlap seams at least 1 inch, and seal joints with flashing sealant.

C. Insulation Installation on Pipe Fittings and Elbows:

1. Install preformed sections of same material as straight segments of pipe insulation when available. Secure according to manufacturer's written instructions.
2. When preformed sections of insulation are not available, install mitered sections of cellular-glass insulation. Secure insulation materials with wire or bands.

D. Insulation Installation on Valves and Pipe Specialties:

1. Install preformed sections of cellular-glass insulation to valve body.
2. Arrange insulation to permit access to packing and to allow valve operation without disturbing insulation.
3. Install insulation to flanges as specified for flange insulation application.

3.4 FLEXIBLE ELASTOMERIC INSULATION INSTALLATION

A. Seal longitudinal seams and end joints with manufacturer's recommended adhesive to eliminate openings in insulation that allow passage of air to surface being insulated.

B. Insulation Installation on Pipe Flanges:

1. Install pipe insulation to outer diameter of pipe flange.
2. Make width of insulation section same as overall width of flange and bolts, plus twice the thickness of pipe insulation.
3. Fill voids between inner circumference of flange insulation and outer circumference of adjacent straight pipe segments with cut sections of sheet insulation of same thickness as pipe insulation.
4. Secure insulation to flanges and seal seams with manufacturer's recommended adhesive to eliminate openings in insulation that allow passage of air to surface being insulated.

C. Insulation Installation on Pipe Fittings and Elbows:

1. Install mitered sections of pipe insulation.
2. Secure insulation materials and seal seams with manufacturer's recommended adhesive to eliminate openings in insulation that allow passage of air to surface being insulated.

D. Insulation Installation on Valves and Pipe Specialties:

1. Install preformed valve covers manufactured of same material as pipe insulation when available.
2. When preformed valve covers are not available, install cut sections of pipe and sheet insulation to valve body. Arrange insulation to permit access to packing and to allow valve operation without disturbing insulation.
3. Install insulation to flanges as specified for flange insulation application.
4. Secure insulation to valves and specialties and seal seams with manufacturer's recommended adhesive to eliminate openings in insulation that allow passage of air to surface being insulated.

3.5 MINERAL-FIBER INSULATION INSTALLATION

A. Insulation Installation on Straight Pipes and Tubes:

1. Secure each layer of preformed pipe insulation to pipe with wire or bands and tighten bands without deforming insulation materials.
2. Where vapor barriers are indicated, seal longitudinal seams, end joints, and protrusions with vapor-barrier mastic and joint sealant.
3. For insulation with factory-applied jackets on above ambient surfaces, secure laps with outward clinched staples at 6 inches o.c.
4. For insulation with factory-applied jackets on below ambient surfaces, do not staple longitudinal tabs but secure tabs with additional adhesive as recommended by insulation material manufacturer and seal with vapor-barrier mastic and flashing sealant.

B. Insulation Installation on Pipe Flanges:

1. Install preformed pipe insulation to outer diameter of pipe flange.
2. Make width of insulation section same as overall width of flange and bolts, plus twice the thickness of pipe insulation.
3. Fill voids between inner circumference of flange insulation and outer circumference of adjacent straight pipe segments with mineral-fiber blanket insulation.
4. Install jacket material with manufacturer's recommended adhesive, overlap seams at least 1 inch, and seal joints with flashing sealant.

C. Insulation Installation on Pipe Fittings and Elbows:

1. Install preformed sections of same material as straight segments of pipe insulation when available.
2. When preformed insulation elbows and fittings are not available, install mitered sections of pipe insulation, to a thickness equal to adjoining pipe insulation. Secure insulation materials with wire or bands.

D. Insulation Installation on Valves and Pipe Specialties:

1. Install preformed sections of same material as straight segments of pipe insulation when available.
2. When preformed sections are not available, install mitered sections of pipe insulation to valve body.
3. Arrange insulation to permit access to packing and to allow valve operation without disturbing insulation.
4. Install insulation to flanges as specified for flange insulation application.

E. Blanket Insulation Installation on Ducts and Plenums: Secure with adhesive and insulation pins.

3.6 Apply adhesives according to manufacturer's recommended coverage rates per unit area, for [**100**] [**50**] <**Insert percentage**> percent coverage of duct and plenum surfaces.

3.7 Apply adhesive to entire circumference of ducts and to all surfaces of fittings and transitions.

3.8 Install either capacitor-discharge-weld pins and speed washers or cupped-head, capacitor-discharge-weld pins on sides and bottom of horizontal ducts and sides of vertical ducts as follows:

A. On duct sides with dimensions 18 inches and smaller, place pins along longitudinal centerline of duct. Space 3 inches maximum from insulation end joints, and 16 inches o.c.

B. On duct sides with dimensions larger than 18 inches, place pins 16 inches o.c. each way, and 3 inches maximum from insulation joints. Install additional pins to hold insulation tightly against surface at cross bracing.

C. Pins may be omitted from top surface of horizontal, rectangular ducts and plenums.

D. Do not overcompress insulation during installation.

E. Impale insulation over pins and attach speed washers.

F. Cut excess portion of pins extending beyond speed washers or bend parallel with insulation surface. Cover exposed pins and washers with tape matching insulation facing.

3.9 For ducts and plenums with surface temperatures below ambient, install a continuous unbroken vapor barrier. Create a facing lap for longitudinal seams and end joints with insulation by removing 2 inches from 1 edge and 1 end of insulation segment. Secure laps to adjacent insulation section with 1/2-inch outward-clinching staples, 1 inch o.c. Install vapor barrier consisting of factory- or field-applied jacket, adhesive, vapor-barrier mastic, and sealant at joints, seams, and protrusions.

A. Repair punctures, tears, and penetrations with tape or mastic to maintain vapor-barrier seal.

B. Install vapor stops for ductwork and plenums operating below 50 deg F at 18-foot intervals. Vapor stops shall consist of vapor-barrier mastic applied in a Z-shaped pattern over insulation face, along butt end of insulation, and over the surface. Cover insulation face and surface to be insulated a width equal to 2 times the insulation thickness but not less than 3 inches.

3.10 Overlap unfaced blankets a minimum of 2 inches on longitudinal seams and end joints. At end joints, secure with steel bands spaced a maximum of 18 inches o.c.

3.11 Install insulation on rectangular duct elbows and transitions with a full insulation section for each surface. Install insulation on round and flat-oval duct elbows with individually mitered gores cut to fit the elbow.

3.12 Insulate duct stiffeners, hangers, and flanges that protrude beyond insulation surface with 6-inch- wide strips of same material used to insulate duct. Secure on alternating sides of stiffener, hanger, and flange with pins spaced 6 inches o.c.

3.13 Apply adhesives according to manufacturer's recommended coverage rates per unit area, for [**100**] [**50**] <**Insert percentage**> percent coverage of duct and plenum surfaces.

1. Apply adhesive to entire circumference of ducts and to all surfaces of fittings and transitions.
2. Install either capacitor-discharge-weld pins and speed washers or cupped-head, capacitor-discharge-weld pins on sides and bottom of horizontal ducts and sides of vertical ducts as follows:

    a. On duct sides with dimensions 18 inches and smaller, place pins along longitudinal centerline of duct. Space 3 inches maximum from insulation end joints, and 16 inches o.c.
    b. On duct sides with dimensions larger than 18 inches, space pins 16 inches o.c. each way, and 3 inches maximum from insulation joints. Install additional pins to hold insulation tightly against surface at cross bracing.
    c. Pins may be omitted from top surface of horizontal, rectangular ducts and plenums.
    d. Do not overcompress insulation during installation.
    e. Cut excess portion of pins extending beyond speed washers or bend parallel with insulation surface. Cover exposed pins and washers with tape matching insulation facing.

3. For ducts and plenums with surface temperatures below ambient, install a continuous unbroken vapor barrier. Create a facing lap for longitudinal seams and end joints with insulation by removing 2 inches from 1 edge and 1 end of insulation segment. Secure laps to adjacent insulation section with 1/2-inch outward-clinching staples, 1 inch o.c. Install vapor barrier consisting of factory- or field-applied jacket, adhesive, vapor-barrier mastic, and sealant at joints, seams, and protrusions.

    a. Repair punctures, tears, and penetrations with tape or mastic to maintain vapor-barrier seal.
    b. Install vapor stops for ductwork and plenums operating below 50 deg F at 18-foot intervals. Vapor stops shall consist of vapor-barrier mastic applied in a Z-shaped pattern over insulation face, along butt end of insulation, and over the surface. Cover insulation face and surface to be insulated a width equal to 2 times the insulation thickness but not less than 3 inches.

4. Install insulation on rectangular duct elbows and transitions with a full insulation section for each surface. Groove and score insulation to fit as closely as possible to outside and inside radius of elbows. Install insulation on round and flat-oval duct elbows with individually mitered gores cut to fit the elbow.
5. Insulate duct stiffeners, hangers, and flanges that protrude beyond insulation surface with 6-inch-wide strips of same material used to insulate duct. Secure on alternating sides of stiffener, hanger, and flange with pins spaced 6 inches o.c.

3.14 POLYOLEFIN INSULATION INSTALLATION

A. Insulation Installation on Straight Pipes and Tubes:

1. Seal split-tube longitudinal seams and end joints with manufacturer's recommended adhesive to eliminate openings in insulation that allow passage of air to surface being insulated.

B. Insulation Installation on Pipe Flanges:

1. Install pipe insulation to outer diameter of pipe flange.
2. Make width of insulation section same as overall width of flange and bolts, plus twice the thickness of pipe insulation.
3. Fill voids between inner circumference of flange insulation and outer circumference of adjacent straight pipe segments with cut sections of polyolefin sheet insulation of same thickness as pipe insulation.
4. Secure insulation to flanges and seal seams with manufacturer's recommended adhesive to eliminate openings in insulation that allow passage of air to surface being insulated.

C. Insulation Installation on Pipe Fittings and Elbows:

1. Install mitered sections of polyolefin pipe insulation.
2. Secure insulation materials and seal seams with manufacturer's recommended adhesive to eliminate openings in insulation that allow passage of air to surface being insulated.

D. Insulation Installation on Valves and Pipe Specialties:

1. Install cut sections of polyolefin pipe and sheet insulation to valve body.
2. Arrange insulation to permit access to packing and to allow valve operation without disturbing insulation.
3. Install insulation to flanges as specified for flange insulation application.
4. Secure insulation to valves and specialties, and seal seams with manufacturer's recommended adhesive to eliminate openings in insulation that allow passage of air to surface being insulated.

3.15 POLYSTYRENE INSULATION INSTALLATION

A. Insulation Installation on Straight Pipes and Tubes:

1. Secure each layer of insulation with tape or bands and tighten bands without deforming insulation materials. Orient longitudinal joints between half sections in 3 and 9 o'clock positions on the pipe.

2. For insulation with factory-applied jackets with vapor barriers, do not staple longitudinal tabs but secure tabs with additional adhesive or tape as recommended by insulation material manufacturer and seal with vapor-barrier mastic.
3. All insulation shall be tightly butted and free of voids and gaps at all joints. Vapor barrier must be continuous. Before installing jacket material, install vapor-barrier system.

B. Insulation Installation on Pipe Flanges:

1. Install preformed pipe insulation to outer diameter of pipe flange.
2. Make width of insulation section same as overall width of flange and bolts, same thickness of adjacent pipe insulation, not to exceed 1-1/2-inch thickness.
3. Fill voids between inner circumference of flange insulation and outer circumference of adjacent straight pipe segments with cut sections of polystyrene block insulation of same thickness as pipe insulation.

C. Insulation Installation on Pipe Fittings and Elbows:

1. Install preformed insulation sections of same material as straight segments of pipe insulation. Secure according to manufacturer's written instructions.

D. Insulation Installation on Valves and Pipe Specialties:

1. Install preformed section of polystyrene insulation to valve body.
2. Arrange insulation to permit access to packing and to allow valve operation without disturbing insulation.
3. Install insulation to flanges as specified for flange insulation application.

3.16 FIELD-APPLIED JACKET INSTALLATION

A. Where FSK jackets are indicated, install as follows:

1. Draw jacket material smooth and tight.
2. Install lap or joint strips with same material as jacket.
3. Secure jacket to insulation with manufacturer's recommended adhesive.
4. Install jacket with 1-1/2-inch laps at longitudinal seams and 3-inch- wide joint strips at end joints.
5. Seal openings, punctures, and breaks in vapor-retarder jackets and exposed insulation with vapor-barrier mastic.

B. Where PVC jackets are indicated, install with 1-inch overlap at longitudinal seams and end joints; for horizontal applications, install with longitudinal seams along top and bottom of tanks and vessels. Seal with manufacturer's recommended adhesive.

1. Apply two continuous beads of adhesive to seams and joints, one bead under lap and the finish bead along seam and joint edge.

C. Where metal jackets are indicated, install with 2-inch overlap at longitudinal seams and end joints. Overlap longitudinal seams arranged to shed water. Seal end joints with weatherproof sealant recommended by insulation manufacturer. Secure jacket with stainless-steel bands 12 inches o.c. and at end joints.

D. Where PVDC jackets are indicated, install as follows:

1. Apply three separate wraps of filament tape per insulation section to secure pipe insulation to pipe prior to installation of PVDC jacket.
2. Wrap factory-presized jackets around individual pipe insulation sections with one end overlapping the previously installed sheet. Install presized jacket with an approximate overlap at butt joint of 2 inches over the previous section. Adhere lap seal using adhesive or SSL, and then apply 1-1/4 circumferences of appropriate PVDC tape around overlapped butt joint.
3. Continuous jacket can be spiral wrapped around a length of pipe insulation. Apply adhesive or PVDC tape at overlapped spiral edge. When electing to use adhesives, refer to manufacturer's written instructions for application of adhesives along this spiral edge to maintain a permanent bond.
4. Jacket can be wrapped in cigarette fashion along length of roll for insulation systems with an outer circumference of 33-1/2 inches or less. The 33-1/2-inch- circumference limit allows for 2-inch-overlap seal. Using the length of roll allows for longer sections of jacket to be installed at one time. Use adhesive on the lap seal. Visually inspect lap seal for "fishmouthing," and use PVDC tape along lap seal to secure joint.
5. Repair holes or tears in PVDC jacket by placing PVDC tape over the hole or tear and wrapping a minimum of 1-1/4 circumferences to avoid damage to tape edges.

3.17 FIRE-RATED INSULATION SYSTEM INSTALLATION

A. Where fire-rated insulation system is indicated, secure system to ducts and duct hangers and supports to maintain a continuous fire rating.

B. Insulate duct access panels and doors to achieve same fire rating as duct.

C. Install firestopping at penetrations through fire-rated assemblies. Fire-stop systems are specified in Division 07 Section "Penetration Firestopping."

3.18 FINISHES

A. Duct, Equipment, and Pipe Insulation with ASJ or Other Paintable Jacket Material: Paint jacket with paint system identified below and as specified in Division 09 painting Sections.

1. Flat Acrylic Finish: [**Two**] <**Insert number**> finish coats over a primer that is compatible with jacket material and finish coat paint. Add fungicidal agent to render fabric mildew proof.

a. Finish Coat Material: Interior, flat, latex-emulsion size.

B. Flexible Elastomeric Thermal Insulation: After adhesive has fully cured, apply two coats of insulation manufacturer's recommended protective coating.

C. Color: Final color as selected by Architect. Vary first and second coats to allow visual inspection of the completed Work.

D. Do not field paint aluminum or stainless-steel jackets.

3.19 FIELD QUALITY CONTROL

A. Perform tests and inspections.

B. Tests and Inspections:

1. Inspect ductwork, randomly selected by Architect, by removing field-applied jacket and insulation in layers in reverse order of their installation. Extent of inspection shall be limited to one location(s) for each duct system defined in the "Duct Insulation Schedule, General" Article.
2. Inspect field-insulated equipment, randomly selected by Architect, by removing field-applied jacket and insulation in layers in reverse order of their installation. Extent of inspection shall be limited to one location(s) for each type of equipment defined in the "Equipment Insulation Schedule" Article. For large equipment, remove only a portion adequate to determine compliance.
3. Inspect pipe, fittings, strainers, and valves, randomly selected by Architect, by removing field-applied jacket and insulation in layers in reverse order of their installation. Extent of inspection shall be limited to three locations of straight pipe three locations of threaded fittings, three locations of welded fittings, two locations of threaded strainers, two locations of welded strainers, three locations of threaded valves, and three locations of flanged valves for each pipe service defined in the "Piping Insulation Schedule, General" Article.

C. All insulation applications will be considered defective Work if sample inspection reveals noncompliance with requirements.

3.20 BOILER BREECHING INSULATION SCHEDULE

A. Round, Exposed Breeching and Connector: High-temperature mineral-fiber [**blanket**] [**board**], 3 inches thick and 3-lb/cu. ft. nominal density.

B. Round, Concealed Breeching and Connector Insulation: High-temperature mineral-fiber [**blanket**] [**board**], 3 inches thick and 3-lb/cu. ft. nominal density.

3.21 DUCT INSULATION SCHEDULE, GENERAL

A. Plenums and Ducts Requiring Insulation:

1. Indoor, concealed supply and outdoor air.
2. Indoor, exposed supply and outdoor air.
3. Indoor, concealed return located in nonconditioned space.
4. Indoor, exposed return located in nonconditioned space.
5. Indoor, concealed, Type I, commercial, kitchen hood exhaust.

6. Indoor, exposed, Type I, commercial, kitchen hood exhaust.
7. Indoor, concealed oven and warewash exhaust.
8. Indoor, exposed oven and warewash exhaust.
9. Indoor, concealed exhaust between isolation damper and penetration of building exterior.
10. Indoor, exposed exhaust between isolation damper and penetration of building exterior.
11. Outdoor, concealed supply and return.
12. Outdoor, exposed supply and return.

B. Items Not Insulated:

1. Fibrous-glass ducts.
2. Metal ducts with duct liner of sufficient thickness to comply with energy code and ASHRAE/IESNA 90.1.
3. Factory-insulated flexible ducts.
4. Factory-insulated plenums and casings.
5. Flexible connectors.
6. Vibration-control devices.
7. Factory-insulated access panels and doors.

3.22 INDOOR DUCT AND PLENUM INSULATION SCHEDULE

A. Concealed, Supply-Air Duct and Plenum Insulation: Mineral-fiber [blanket] [board], [**1-1/2 inches**] [**2 inches**] [**3 inches**] <Insert thickness> thick and [**0.75-lb/cu. ft.**] [**1.5-lb/cu. ft.**] [**3-lb/cu. ft.**] nominal density.

B. Concealed, Return-Air Duct and Plenum Insulation: Mineral-fiber [blanket] [board], [**1-1/2 inches**] [**2 inches**] [**3 inches**] <Insert thickness> thick and [**0.75-lb/cu. ft.**] [**1.5-lb/cu. ft.**] [**3-lb/cu. ft.**] nominal density.

C. Concealed, Outdoor-Air Duct and Plenum Insulation: Mineral-fiber [blanket] [board], [**1-1/2 inches**] [**2 inches**] [**3 inches**] <Insert thickness> thick and [**0.75-lb/cu. ft.**] [**1.5-lb/cu. ft.**] [**3-lb/cu. ft.**] nominal density.

D. Concealed, Exhaust-Air Duct and Plenum Insulation: Mineral-fiber [blanket] [board], [**1-1/2 inches**] [**2 inches**] [**3 inches**] <Insert thickness> thick and [**0.75-lb/cu. ft.**] [**1.5-lb/cu. ft.**] [**3-lb/cu. ft.**] nominal density.

E. Concealed, Type I, Commercial, Kitchen Hood Exhaust Duct and Plenum Insulation: Fire-rated [**blanket**] [**board**] [**blanket or board**]; thickness as required to achieve 2-hour fire rating.

F. Exposed, Supply-Air Duct and Plenum Insulation: Mineral-fiber [blanket] [board], [**1-1/2 inches**] [**2 inches**] [**3 inches**] <Insert thickness> thick and [**0.75-lb/cu. ft.**] [**1.5-lb/cu. ft.**] [**3-lb/cu. ft.**] nominal density.

G. Exposed, Return-Air Duct and Plenum Insulation: Mineral-fiber [blanket] [board], [**1-1/2 inches**] [**2 inches**] [**3 inches**] <Insert thickness> thick and [**0.75-lb/cu. ft.**] [**1.5-lb/cu. ft.**] [**3-lb/cu. ft.**] nominal density.

H. Exposed, Outdoor-Air Duct and Plenum Insulation: Mineral-fiber [blanket] [board], [**1-1/2 inches**] [**2 inches**] [**3 inches**] <Insert thickness> thick and [**0.75-lb/cu. ft.**] [**1.5-lb/cu. ft.**] [**3-lb/cu. ft.**] nominal density.

I. Exposed, Exhaust-Air Duct and Plenum Insulation: Mineral-fiber [blanket] [board], [**1-1/2 inches**] [**2 inches**] [**3 inches**] <Insert thickness> thick and [**0.75-lb/cu. ft.**] [**1.5-lb/cu. ft.**] [**3-lb/cu. ft.**] nominal density.

J. Exposed, Type I, Commercial, Kitchen Hood Exhaust Duct and Plenum Insulation: Fire-rated [**blanket**] [**board**] [**blanket or board**]; thickness as required to achieve 2-hour fire rating.

3.23 ABOVEGROUND, OUTDOOR DUCT AND PLENUM INSULATION SCHEDULE

A. Insulation materials and thicknesses are identified below. If more than one material is listed for a duct system, selection from materials listed is Contractor's option.

B. Concealed, Supply-Air Duct and Plenum Insulation: Mineral-fiber [blanket] [board], [**1-1/2 inches**] [**2 inches**] [**3 inches**] <Insert thickness> thick and [**0.75-lb/cu. ft.**] [**1.5-lb/cu. ft.**] [**3-lb/cu. ft.**] nominal density.

C. Concealed, Return-Air Duct and Plenum Insulation: Mineral-fiber [blanket] [board], [**1-1/2 inches**] [**2 inches**] [**3 inches**] <Insert thickness> thick and [**0.75-lb/cu. ft.**] [**1.5-lb/cu. ft.**] [**3-lb/cu. ft.**] nominal density.

D. Concealed, Outdoor-Air Duct and Plenum Insulation: Mineral-fiber [blanket] [board], [**1-1/2 inches**] [**2 inches**] [**3 inches**] <Insert thickness> thick and [**0.75-lb/cu. ft.**] [**1.5-lb/cu. ft.**] [**3-lb/cu. ft.**] nominal density.

E. Concealed, Supply-Air Duct and Plenum Insulation: Mineral-fiber [blanket] [board], [**1-1/2 inches**] [**2 inches**] [**3 inches**] <Insert thickness> thick and [**0.75-lb/cu. ft.**] [**1.5-lb/cu. ft.**] [**3-lb/cu. ft.**] nominal density.

F. Exposed, Supply-Air Duct and Plenum Insulation: Mineral-fiber [blanket] [board], [**1-1/2 inches**] [**2 inches**] [**3 inches**] <Insert thickness> thick and [**0.75-lb/cu. ft.**] [**1.5-lb/cu. ft.**] [**3-lb/cu. ft.**] nominal density.

G. Exposed, Return-Air Duct and Plenum Insulation: Mineral-fiber [blanket] [board], [**1-1/2 inches**] [**2 inches**] [**3 inches**] <Insert thickness> thick and [**0.75-lb/cu. ft.**] [**1.5-lb/cu. ft.**] [**3-lb/cu. ft.**] nominal density.

H. Exposed, Supply-Air Duct and Plenum Insulation: Mineral-fiber [blanket] [board], [**1-1/2 inches**] [**2 inches**] [**3 inches**] <Insert thickness> thick and [**0.75-lb/cu. ft.**] [**1.5-lb/cu. ft.**] [**3-lb/cu. ft.**] nominal density.

I. Exposed, Return-Air Duct and Plenum Insulation: Mineral-fiber [blanket] [board], [**1-1/2 inches**] [**2 inches**] [**3 inches**] <Insert thickness> thick and [**0.75-lb/cu. ft.**] [**1.5-lb/cu. ft.**] [**3-lb/cu. ft.**] nominal density.

3.24 EQUIPMENT INSULATION SCHEDULE

A. Insulation materials and thicknesses are identified below. If more than one material is listed for a type of equipment, selection from materials listed is Contractor's option.

B. Insulate indoor and outdoor equipment in paragraphs below that is not factory insulated.

C. Heat-Exchanger (Water-to-Water for Heating Service) Insulation: Mineral-fiber pipe and tank, [**2 inches**] **<Insert thickness>** thick.

D. Dual-service heating and cooling pump insulation shall be[**one of**] the following:

1. Cellular Glass: [**3 inches**] <**Insert thickness**> thick.
2. Mineral-Fiber Board: [**2 inches**] <**Insert thickness**> thick and [**2-lb/cu. ft.**] [**3-lb/cu. ft.**] [**6-lb/cu. ft.**] nominal density.

E. Heating-Hot-Water Pump Insulation: Mineral-Fiber Board: [**2 inches**] <Insert thickness> thick and [**2-lb/cu. ft.**] [**3-lb/cu. ft.**] [**6-lb/cu. ft.**] nominal density.

F. Chilled-water expansion/compression tank insulation shall be[**one of**] the following:

1. Cellular Glass: [**1-1/2 inches**] <**Insert thickness**> thick.
2. Flexible Elastomeric: [**1 inch**] <**Insert thickness**> thick.
3. Mineral-Fiber Pipe and Tank: [**1 inch**] <**Insert thickness**> thick.
4. Polyolefin: [**1 inch**] <**Insert thickness**> thick.

G. Dual-service heating and cooling expansion/compression tank insulation shall be[**one of**] the following:

1. Cellular Glass: [**1-1/2 inches**] <**Insert thickness**> thick.
2. Flexible Elastomeric: [**1 inch**] <**Insert thickness**> thick.
3. Mineral-Fiber Pipe and Tank: [**1 inch**] <**Insert thickness**> thick.
4. Polyolefin: [**1 inch**] <**Insert thickness**> thick.

H. Heating-Hot-Water Expansion/Compression Tank Insulation: Mineral-Fiber Pipe and Tank: [**1 inch**] <**Insert thickness**> thick.

I. Chilled-water air-separator insulation shall be[**one of**] the following:

1. Cellular Glass: [**2 inches**] <**Insert thickness**> thick.
2. Flexible Elastomeric: [**1 inch**] <**Insert thickness**> thick.
3. Mineral-Fiber Pipe and Tank: [**1 inch**] <**Insert thickness**> thick.
4. Polyolefin: [**1 inch**] <**Insert thickness**> thick.

J. Dual-service heating and cooling air-separator insulation shall be[**one of**] the following:

1. Cellular Glass: [**2 inches**] <**Insert thickness**> thick.
2. Flexible Elastomeric: [**1 inch**] <**Insert thickness**> thick.
3. Mineral-Fiber Pipe and Tank: [**1 inch**] <**Insert thickness**> thick.
4. Polyolefin: [**1 inch**] <**Insert thickness**> thick.

K. Heating-Hot-Water Air-Separator Insulation: Mineral-Fiber Pipe and Tank: [**2 inches**] <**Insert thickness**> thick.

3.25 PIPING INSULATION SCHEDULE, GENERAL

A. Acceptable preformed pipe and tubular insulation materials and thicknesses are identified for each piping system and pipe size range. If more than one material is listed for a piping system, selection from materials listed is Contractor's option.

B. Items Not Insulated: Unless otherwise indicated, do not install insulation on the following:

1. Drainage piping located in crawl spaces.
2. Underground piping.
3. Chrome-plated pipes and fittings unless there is a potential for personnel injury.

3.26 INDOOR PIPING INSULATION SCHEDULE

A. Chilled Water and Brine, above 40 Deg F: Insulation shall be[**one of**] the following:

1. Cellular Glass: [**1-1/2 inches**] [**2 inches**] <Insert thickness> thick.
2. Flexible Elastomeric: [**1 inch**] <**Insert thickness**> thick.
3. Mineral-Fiber, [Preformed Pipe, Type I] [Pipe Insulation Wicking System] [Preformed Pipe, Type I or Pipe Insulation Wicking System]: [**1 inch**] [**1-1/2 inches**] [**2 inches**] <Insert thickness> thick.
4. Polyolefin: [**1 inch**] <**Insert thickness**> thick.

B. Heating-Hot-Water Supply and Return, 200 Deg F and below: Insulation shall be[**one of**] the following:

1. Cellular Glass: [**1-1/2 inches**] [**2 inches**] <Insert thickness> thick.
2. Mineral-Fiber, Preformed Pipe, Type I: [**1 inch**] [**2 inches**] <**Insert thickness**> thick.

C. Refrigerant Suction and Hot-Gas Piping: [Flexible elastomeric] [Mineral-fiber, preformed pipe insulation] [Polyolefin], [**1 inch**] <Insert thickness> thick.

D. Refrigerant Suction and Hot-Gas Flexible Tubing: [**Flexible elastomeric**] [**Polyolefin**], [**1 inch**] <**Insert thickness**> thick.

E. Dual-Service Heating and Cooling, 40 to 200 Deg F: Insulation shall be[**one of**] the following:

1. Cellular Glass: [**1-1/2 inches**] [**2 inches**] <Insert thickness> thick.
2. Mineral-Fiber, Preformed Pipe, Type I: [**1 inch**] [**1-1/2 inches**] [**2 inches**] <**Insert thickness**> thick.

3.27 OUTDOOR, ABOVEGROUND PIPING INSULATION SCHEDULE

A. Chilled Water and Brine: Insulation shall be[**one of**] the following:

1. Cellular Glass: [**3 inches**] <**Insert thickness**> thick.
2. Flexible Elastomeric: [**3 inches**] <**Insert thickness**> thick.
3. Mineral-Fiber, Preformed Pipe Insulation, Type I: [**3 inches**] <**Insert thickness**> thick.
4. Polyolefin: [**3 inches**] <**Insert thickness**> thick.
5. Polystyrene: [**2 inches**] <**Insert thickness**> thick.

B. Heating-Hot-Water Supply and Return, 200 Deg F and below: Insulation shall be[**one of**] the following:

1. Cellular Glass: [**3 inches**] <**Insert thickness**> thick.
2. Mineral-Fiber, Preformed Pipe Insulation, Type I: [**2 inches**] <**Insert thickness**> thick.

C. Refrigerant Suction and Hot-Gas Piping: Insulation shall be[**one of**] the following:

1. Cellular Glass: [**2 inches**] <**Insert thickness**> thick.
2. Flexible Elastomeric: [**2 inches**] <**Insert thickness**> thick.
3. Mineral-Fiber, Preformed Pipe Insulation, Type I: [**2 inches**] <**Insert thickness**> thick.
4. Polyolefin: [**2 inches**] <**Insert thickness**> thick.
5. Polystyrene: [**2 inches**] <**Insert thickness**> thick.

D. Refrigerant Suction and Hot-Gas Flexible Tubing: Insulation shall be[**one of**] the following:

1. Flexible Elastomeric: [**2 inches**] <**Insert thickness**> thick.
2. Polyolefin: [**2 inches**] <**Insert thickness**> thick.

E. Dual-Service Heating and Cooling: Insulation shall be[**one of**] the following:

1. Cellular Glass: [**3 inches**] <**Insert thickness**> thick.
2. Mineral-Fiber, Preformed Pipe Insulation, Type I: [**2 inches**] <**Insert thickness**> thick.

3.28 OUTDOOR, UNDERGROUND PIPING INSULATION SCHEDULE

A. Loose-fill insulation, for belowground piping, is specified in Division 33 piping distribution Sections.

B. Chilled Water, All Sizes: Cellular glass, [**2 inches**] <**Insert thickness**> thick.

C. Heating-Hot-Water Supply and Return, All Sizes, 200 Deg F and below: Cellular glass, [**3 inches**] <**Insert thickness**> thick.

D. Dual-Service Heating and Cooling, All Sizes, 40 to 200 Deg F: Cellular glass, [**3 inches**] <**Insert thickness**> thick.

3.29 INDOOR, FIELD-APPLIED JACKET SCHEDULE

A. Install jacket over insulation material. For insulation with factory-applied jacket, install the field-applied jacket over the factory-applied jacket.

B. If more than one material is listed, selection from materials listed is Contractor's option.

C. Ducts and Plenums, Concealed:

1. None.
2. [PVC] [PVC, Color-Coded by System]: [**20 mils**] [**30 mils**] thick.
3. Aluminum, [Smooth] [Corrugated] [Stucco Embossed]: [**0.016 inch**] [**0.020 inch**] [**0.024 inch**] [**0.032 inch**] [**0.040 inch**] thick.
4. <Insert jacket type.>

D. Ducts and Plenums, Exposed:

1. None.

2. [PVC] [PVC, Color-Coded by System]: [**20 mils**] [**30 mils**] thick.
3. Aluminum, [Smooth] [Corrugated] [Stucco Embossed]: [**0.016 inch**] [**0.020 inch**] [**0.024 inch**] [**0.032 inch**] [**0.040 inch**] thick.
4. <Insert jacket type.>

E. Equipment, Concealed:

1. None.
2. [PVC] [PVC, Color-Coded by System]: [**20 mils**] [**30 mils**] thick.
3. Aluminum, [Smooth] [Corrugated] [Stucco Embossed]: [**0.016 inch**] [**0.020 inch**] [**0.024 inch**] [**0.032 inch**] [**0.040 inch**] thick.
4. <Insert jacket type.>

F. Equipment, Exposed, up to 48 Inches in Diameter or with Flat Surfaces up to 72 Inches:

1. None.
2. [PVC] [PVC, Color-Coded by System]: [**20 mils**] [**30 mils**] thick.
3. Aluminum, [Smooth] [Corrugated] [Stucco Embossed]: [**0.016 inch**] [**0.020 inch**] [**0.024 inch**] [**0.032 inch**] [**0.040 inch**] thick.
4. <Insert jacket type.>

G. Equipment, Exposed, Larger Than 48 Inches in Diameter or with Flat Surfaces Larger Than 72 Inches:

1. None.
2. [Painted]Aluminum, [Smooth] [Stucco Embossed] with [**1-1/4-Inch-** Deep Corrugations] [**2-1/2-Inch-** Deep Corrugations] [**4-by-1-Inch** Box Ribs]: [**0.032 inch**] thick.
3. <Insert jacket type.>

H. Piping, Concealed:

1. None.
2. [PVC] [PVC, Color-Coded by System]: [**20 mils**] [**30 mils**] thick.
3. Aluminum, [Smooth] [Corrugated] [Stucco Embossed]: [**0.016 inch**] [**0.020 inch**] [**0.024 inch**] [**0.032 inch**] [**0.040 inch**] thick.
4. <Insert jacket type.>

I. Piping, Exposed:

1. None.
2. [PVC] [PVC, Color-Coded by System]: [**20 mils**] [**30 mils**] thick.
3. Aluminum, [Smooth] [Corrugated] [Stucco Embossed]: [**0.016 inch**] [**0.020 inch**] [**0.024 inch**] [**0.032 inch**] [**0.040 inch**] thick.
4. <Insert jacket type.>

3.30 OUTDOOR, FIELD-APPLIED JACKET SCHEDULE

A. Install jacket over insulation material. For insulation with factory-applied jacket, install the field-applied jacket over the factory-applied jacket.

B. If more than one material is listed, selection from materials listed is Contractor's option.

C. Ducts and Plenums, Concealed:

1. None.
2. [PVC] [PVC, Color-Coded by System]: [**20 mils**] [**30 mils**] thick.
3. Aluminum, [Smooth] [Corrugated] [Stucco Embossed]: [**0.016 inch**] [**0.020 inch**] [**0.024 inch**] [**0.032 inch**] [**0.040 inch**] thick.
4. <Insert jacket type.>

D. Ducts and Plenums, Exposed, up to 48 Inches in Diameter or with Flat Surfaces up to 72 Inches:

1. Aluminum, [Smooth] [Corrugated] [Stucco Embossed]: [**0.016 inch**] [**0.020 inch**] [**0.024 inch**] [**0.032 inch**] [**0.040 inch**] thick.
2. <Insert jacket type.>

E. Ducts and Plenums, Exposed, Larger Than 48 Inches in Diameter or with Flat Surfaces Larger Than 72 Inches:

1. [Painted]Aluminum, [Smooth] [Stucco Embossed] with [**1-1/4-Inch-** Deep Corrugations] [**2-1/2-Inch-** Deep Corrugations] [**4-by-1-Inch** Box Ribs]: [**0.032 inch**] [**0.040 inch**] thick.
2. <Insert jacket type.>

F. Equipment, Exposed, up to 48 Inches in Diameter or with Flat Surfaces up to 72 Inches:

1. [Painted]Aluminum, [Smooth] [Corrugated] [Stucco Embossed] [with Z-Shaped Locking Seam]: [**0.016 inch**] [**0.020 inch**] [**0.024 inch**] [**0.032 inch**] [**0.040 inch**] thick.
2. <Insert jacket type.>

G. Equipment, Exposed, Larger Than 48 Inches in Diameter or with Flat Surfaces Larger Than 72 Inches:

1. [Painted]Aluminum, [Smooth] [Stucco Embossed] with [**1-1/4-Inch-** Deep Corrugations] [**2-1/2-Inch-** Deep Corrugations] [**4-by-1-Inch** Box Ribs]: [**0.032 inch**] [**0.040 inch**] thick.
2. <Insert jacket type.>

H. Piping, Concealed:

1. None.
2. [PVC] [PVC, Color-Coded by System]: [**20 mils**] [**30 mils**] thick.
3. Aluminum, [Smooth] [Corrugated] [Stucco Embossed]: [**0.016 inch**] [**0.020 inch**] [**0.024 inch**] [**0.032 inch**] [**0.040 inch**] thick.
4. <Insert jacket type.>

I. Piping, Exposed:

1. PVC: [**20 mils**] [**30 mils**] [**40 mils**] thick.
2. <Insert jacket type.>

3.31 UNDERGROUND, FIELD-INSTALLED INSULATION JACKET

A. For underground direct-buried piping applications, install underground direct-buried jacket over insulation material.

END OF SECTION 230700

SECTION 230900 - INSTRUMENTATION AND CONTROL FOR HVAC

PART 1 - GENERAL

1.1 SUMMARY

A. This Section includes control equipment for HVAC systems and components, including control components for terminal heating and cooling units not supplied with factory-wired controls.

B. See Division 23 Section "Sequence of Operations for HVAC Controls" for requirements that relate to this Section.

1.2 SUBMITTALS

A. Product Data: For each control device indicated.

B. Shop Drawings:

1. Schematic flow diagrams.
2. Power, signal, and control wiring diagrams.
3. Details of control panel faces.
4. Damper schedule.
5. Valve schedule.
6. DDC System Hardware: Wiring diagrams, schematic floor plans, and schematic control diagrams.
7. Control System Software: Schematic diagrams, written descriptions, and points list.

C. Software and firmware operational documentation.

D. Field quality-control test reports.

E. Operation and maintenance data.

1.3 QUALITY ASSURANCE

A. Electrical Components, Devices, and Accessories: Listed and labeled as defined in NFPA 70, Article 100, by a testing agency acceptable to authorities having jurisdiction, and marked for intended use.

PART 2 - PRODUCTS

2.1 MANUFACTURERS

A. In other Part 2 articles where titles below introduce lists, the following requirements apply to product selection:

B. Available Manufacturers: Subject to compliance with requirements, manufacturers offering products that may be incorporated into the Work include, but are not limited to, manufacturers specified.

C. Manufacturers: Subject to compliance with requirements, provide products by one of the manufacturers specified.

2.2 CONTROL SYSTEM

A. [**Available**]Manufacturers:

1. Alerton Inc.
2. American Auto-Matrix.
3. Andover Controls Corporation.
4. Automated Logic Corporation.
5. Carel.
6. Delta Controls Inc.
7. EDA Controls Corp.
8. Electronic Systems USA, Inc.
9. Functional Devices Inc.
10. Heat-Timer Corporation.
11. Honeywell International Inc.; Home & Building Control.
12. Impact Energy Controls Corp.
13. Invensys Building Systems.
14. Johnson Controls, Inc.; Controls Group.
15. KMC Controls/Kreuter Manufacturing Company.
16. Luwa USA, Inc.; Textile Air Engineering.
17. McQuay International.
18. Siemens Building Technologies, Inc.
19. Solidyne Corp.
20. Staefa Control System Inc.; Siemens Building Technologies, Inc.
21. TAC Americas, INC.
22. TCS/Basys Controls.
23. tekmar Control Systems, Inc.
24. Teletrol Systems Incorporated.
25. Temco Controls Ltd. USA.
26. Tour & Andersson Control, Inc.
27. Trane; Worldwide Applied Systems Group.
28. Triangle MicroSystems, Inc.
29. Voltec, Inc.
30. <Insert manufacturer's name.>

B. Control system shall consist of sensors, indicators, actuators, final control elements, interface equipment, other apparatus, and accessories to control mechanical systems.

C. Control system shall consist of sensors, indicators, actuators, final control elements, interface equipment, other apparatus, accessories, and software connected to distributed controllers operating in multiuser, multitasking environment on token-passing network and programmed to control mechanical systems. An operator workstation permits interface with the network via dynamic color graphics with each mechanical system, building floor plan, and control device depicted by point-and-click graphics.

2.3 DDC EQUIPMENT

A. Operator Workstation: PC-based microcomputer with minimum configuration as follows:

1. Motherboard: With 8 integrated USB 2.0 ports, integrated Intel Pro 10/100 (Ethernet), integrated audio, bios, and hardware monitoring.
2. Processor: [Intel Pentium 4] <Insert name>, <Insert clock speed> MHz.
3. Random-Access Memory: [**512**] <**Insert number**> MB.
4. Graphics: Video adapter, minimum [**1280 x 1024**] [**1600 x 1200**] <**Insert value**> pixels, [**64**] <**Insert number**>-MB video memory, with TV out.
5. Monitor: [**17 inches**] [**19 inches**] <Insert size>, LCD color.
6. Keyboard: QWERTY, 105 keys in ergonomic shape.
7. Floppy-Disk Drive: 1.44 MB.
8. Hard-Disk Drive: [**80 GB**] <**Insert capacity**>.
9. CD-ROM Read/Write Drive: [**48x24x48**] <**Insert value**>.
10. Mouse: Three button, optical.
11. Uninterruptible Power Supply: [**2**] <**Insert capacity**> kVa.
12. Operating System: [**Microsoft Windows XP Professional**] <**Insert system name**> with high-speed Internet access.
13. Printer: Color, ink-jet type as follows:

    a. Print Head: [**4800 x 1200**] <**Insert value**> dpi optimized color resolution.
    b. Paper Handling: Minimum of [**100**] <**Insert number**> sheets.
    c. Print Speed: Minimum of [**17**] <**Insert number**> ppm in black and [**12**] <**Insert number**> ppm in color.

B. Application Software.

C. Control Units: Modular, comprising processor board with programmable, nonvolatile, random-access memory; local operator access and display panel; integral interface equipment; and backup power source.

1. Units monitor or control each I/O point; process information; execute commands from other control units, devices, and operator stations; and download from or upload to operator workstation.
2. Stand-alone mode control functions operate regardless of network status. Functions include the following:

    a. Global communications.
    b. Discrete/digital, analog, and pulse I/O.
    c. Monitoring, controlling, or addressing data points.
    d. Software applications, scheduling, and alarm processing.
    e. Testing and developing control algorithms without disrupting field hardware and controlled environment.

D. Local Control Units: Modular, comprising processor board with electronically programmable, nonvolatile, read-only memory; and backup power source.

1. Units monitor or control each I/O point, process information, and download from or upload to operator workstation or diagnostic terminal unit.
2. Stand-alone mode control functions operate regardless of network status. Functions include the following:

    a. Global communications.
    b. Discrete/digital, analog, and pulse I/O.

c. Monitoring, controlling, or addressing data points.

3. Local operator interface provides for download from or upload to operator workstation.

E. I/O Interface: Hardwired inputs and outputs may tie into system through controllers. Protect points so that shorting will cause no damage to controllers.

1. Binary Inputs: Allow monitoring of on-off signals without external power.
2. Pulse Accumulation Inputs: Accept up to 10 pulses per second.
3. Analog Inputs: Allow monitoring of low-voltage (0- to 10-V dc), current (4 to 20 mA), or resistance signals.
4. Binary Outputs: Provide on-off or pulsed low-voltage signal, selectable for normally open or normally closed operation[**with three-position (on-off-auto) override switches and status lights**].
5. Analog Outputs: Provide modulating signal, either low voltage (0- to 10-V dc) or current (4 to 20 mA)[**with status lights, two-position (auto-manual) switch, and manually adjustable potentiometer**].
6. Tri-State Outputs: Provide two coordinated binary outputs for control of three-point, floating-type electronic actuators.
7. Universal I/Os: Provide software selectable binary or analog outputs.

F. Power Supplies: Transformers with Class 2 current-limiting type or overcurrent protection; limit connected loads to 80 percent of rated capacity. DC power supply shall match output current and voltage requirements and be full-wave rectifier type with the following:

1. Output ripple of 5.0 mV maximum peak to peak.
2. Combined 1 percent line and load regulation with 100-mic.sec. response time for 50 percent load changes.
3. Built-in overvoltage and overcurrent protection and be able to withstand 150 percent overload for at least 3 seconds without failure.

G. Power Line Filtering: Internal or external transient voltage and surge suppression for workstations or controllers with the following:

1. Minimum dielectric strength of 1000 V.
2. Maximum response time of 10 nanoseconds.
3. Minimum transverse-mode noise attenuation of 65 dB.
4. Minimum common-mode noise attenuation of 150 dB at 40 to 100 Hz.

2.4 UNITARY CONTROLLERS

A. Unitized, capable of stand-alone operation with sufficient memory to support its operating system, database, and programming requirements, and with sufficient I/O capacity for the application.

1. Configuration: Local keypad and display; diagnostic LEDs for power, communication, and processor; wiring termination to terminal strip or card connected with ribbon cable; memory with bios; and [**72**] **<Insert number>**-hour battery backup.
2. Operating System: Manage I/O communication to allow distributed controllers to share real and virtual object information and allow central monitoring and alarms. [**Perform scheduling with real-time clock.**]Perform automatic system diagnostics; monitor system and report failures.

3. Enclosure: Dustproof rated for operation at 32 to 120 deg F.

2.5 ANALOG CONTROLLERS

A. Step Controllers: 6- or 10-stage type, with heavy-duty switching rated to handle loads and operated by electric motor.

B. Electric, Outdoor-Reset Controllers: Remote-bulb or bimetal rod-and-tube type, proportioning action with adjustable throttling range, adjustable set point, scale range minus 10 to plus 70 deg F, and single- or double-pole contacts.

C. Electronic Controllers: Wheatstone-bridge-amplifier type, in steel enclosure with provision for remote-resistance readjustment. Identify adjustments on controllers, including proportional band and authority.

1. Single controllers can be integral with control motor if provided with accessible control readjustment potentiometer.

D. Fan-Speed Controllers: Solid-state model providing field-adjustable proportional control of motor speed from maximum to minimum of 55 percent and on-off action below minimum fan speed. Controller shall briefly apply full voltage, when motor is started, to rapidly bring motor up to minimum speed. Equip with filtered circuit to eliminate radio interference.

2.6 TIME CLOCKS

A. [**Available**]Manufacturers:

1. ATC-Diversified Electronics.
2. Grasslin Controls Corporation.
3. Paragon Electric Co., Inc.
4. Precision Multiple Controls, Inc.
5. SSAC Inc.; ABB USA.
6. TCS/Basys Controls.
7. Theben AG - Lumilite Control Technology, Inc.
8. Time Mark Corporation.
9. <Insert manufacturer's name.>

B. Seven-day, programming-switch timer with synchronous-timing motor and seven-day dial; continuously charged, nickel-cadmium-battery-driven, eight-hour, power-failure carryover; multiple-switch trippers; minimum of two and maximum of eight signals per day with two normally open and two normally closed output contacts.

C. Solid-state, programmable time control with [**4**] [**8**] <**Insert number**> separate programs each with up to 100 on-off operations; 1-second resolution; lithium battery backup; keyboard interface and manual override; individual on-off-auto switches for each program; 365-day calendar with 20 programmable holidays; choice of fail-safe operation for each program; system fault alarm; and communications package allowing networking of time controls and programming from PC.

2.7 ELECTRONIC SENSORS

A. Description: Vibration and corrosion resistant; for wall, immersion, or duct mounting as required.

B. Thermistor Temperature Sensors and Transmitters:

1. [**Available**]Manufacturers:

a. BEC Controls Corporation.
b. Ebtron, Inc.
c. Heat-Timer Corporation.
d. I.T.M. Instruments Inc.
e. MAMAC Systems, Inc.
f. RDF Corporation.
g. <Insert manufacturer's name.>

2. Accuracy: Plus or minus [**0.5 deg F**] [**0.36 deg F**] at calibration point.
3. Wire: Twisted, shielded-pair cable.
4. Insertion Elements in Ducts: Single point, [**8 inches**] [**18 inches**] long; use where not affected by temperature stratification or where ducts are smaller than 9 sq. ft..
5. Averaging Elements in Ducts: [**36 inches long, flexible**] [**72 inches long, flexible**] [**18 inches long, rigid**]; use where prone to temperature stratification or where ducts are larger than 10 sq. ft..
6. Insertion Elements for Liquids: Brass or stainless-steel socket with minimum insertion length of 2-1/2 inches.
7. Room Sensor Cover Construction: Manufacturer's standard locking covers.

    a. Set-Point Adjustment: [**Concealed**] [**Exposed**].
    b. Set-Point Indication: [**Concealed**] [**Keyed**] [**Exposed**].
    c. Thermometer: [Concealed] [Exposed] [Red-reading glass] [Spiral bimetal].
    d. Color: <Insert color from manufacturer's full range.>
    e. Orientation: [**Vertical**] [**Horizontal**].

8. Outside-Air Sensors: Watertight inlet fitting, shielded from direct sunlight.
9. Room Security Sensors: Stainless-steel cover plate with insulated back and security screws.

C. RTDs and Transmitters:

1. [**Available**]Manufacturers:

    a. BEC Controls Corporation.
    b. MAMAC Systems, Inc.
    c. RDF Corporation.
    d. <Insert manufacturer's name.>

2. Accuracy: Plus or minus 0.2 percent at calibration point.
3. Wire: Twisted, shielded-pair cable.
4. Insertion Elements in Ducts: Single point, [**8 inches**] [**18 inches**] long; use where not affected by temperature stratification or where ducts are smaller than 9 sq. ft..
5. Averaging Elements in Ducts: [**18 inches long, rigid**] [**24 inches long, rigid**] [**48 inches long, rigid**] [**24 feet long, flexible**]; use where prone to temperature stratification or where ducts are larger than 9 sq. ft.; length as required.
6. Insertion Elements for Liquids: Brass socket with minimum insertion length of 2-1/2 inches.
7. Room Sensor Cover Construction: Manufacturer's standard locking covers.

    a. Set-Point Adjustment: [**Concealed**] [**Exposed**].
    b. Set-Point Indication: [**Concealed**] [**Keyed**] [**Exposed**].
    c. Thermometer: [Concealed] [Exposed] [Red-reading glass] [Spiral bimetal].
    d. Color: <Insert color from manufacturer's full range.>
    e. Orientation: [**Vertical**] [**Horizontal**].

8. Outside-Air Sensors: Watertight inlet fitting, shielded from direct sunlight.
9. Room Security Sensors: Stainless-steel cover plate with insulated back and security screws.

D. Humidity Sensors: Bulk polymer sensor element.

1. [**Available**]Manufacturers:

a. BEC Controls Corporation.
b. General Eastern Instruments.
c. MAMAC Systems, Inc.
d. ROTRONIC Instrument Corp.
e. TCS/Basys Controls.
f. Vaisala.
g. <Insert manufacturer's name.>

2. Accuracy: [**5**] [**2**] percent full range with linear output.
3. Room Sensor Range: 20 to 80 percent relative humidity.
4. Room Sensor Cover Construction: Manufacturer's standard locking covers.

a. Set-Point Adjustment: [**Concealed**] [**Exposed**].
b. Set-Point Indication: [**Concealed**] [**Keyed**] [**Exposed**].
c. Thermometer: [Concealed] [Exposed] [Red-reading glass] [Spiral bimetal].
d. Color: <Insert color from manufacturer's full range.>
e. Orientation: [**Vertical**] [**Horizontal**].

5. Duct Sensor: 20 to 80 percent relative humidity range with element guard and mounting plate.
6. Outside-Air Sensor: 20 to 80 percent relative humidity range with mounting enclosure, suitable for operation at outdoor temperatures of [**32 to 120 deg F**] [**minus 22 to plus 185 deg F**] [**minus 40 to plus 170 deg F**].
7. Duct and Sensors: With element guard and mounting plate, range of 0 to 100 percent relative humidity.

E. Pressure Transmitters/Transducers:

1. [**Available**]Manufacturers:

a. BEC Controls Corporation.
b. General Eastern Instruments.
c. MAMAC Systems, Inc.
d. ROTRONIC Instrument Corp.
e. TCS/Basys Controls.
f. Vaisala.
g. <Insert manufacturer's name.>

2. Static-Pressure Transmitter: Nondirectional sensor with suitable range for expected input, and temperature compensated.

a. Accuracy: 2 percent of full scale with repeatability of 0.5 percent.
b. Output: 4 to 20 mA.

c. Building Static-Pressure Range: 0- to 0.25-inch wg.
d. Duct Static-Pressure Range: 0- to 5-inch wg.

3. Water Pressure Transducers: Stainless-steel diaphragm construction, suitable for service; minimum 150-psig operating pressure; linear output 4 to 20 mA.
4. Water Differential-Pressure Transducers: Stainless-steel diaphragm construction, suitable for service; minimum 150-psig operating pressure and tested to 300-psig; linear output 4 to 20 mA.
5. Differential-Pressure Switch (Air or Water): Snap acting, with pilot-duty rating and with suitable scale range and differential.
6. Pressure Transmitters: Direct acting for gas or liquid service; range suitable for system; linear output 4 to 20 mA.

F. Room Sensor Cover Construction: Manufacturer's standard locking covers.

1. Set-Point Adjustment: [**Concealed**] [**Exposed**].
2. Set-Point Indication: [**Concealed**] [**Keyed**] [**Exposed**].
3. Thermometer: [Concealed] [Exposed] [Red-reading glass] [Spiral bimetal].
4. Color: <Insert color from manufacturer's full range.>
5. Orientation: [**Vertical**] [**Horizontal**].

G. Room sensor accessories include the following:

1) Insulating Bases: For sensors located on exterior walls.
2) Guards: [**Locking; heavy-duty, transparent plastic; mounted on separate base**] [**Metal wire, tamperproof**] [**Locking, solid metal, ventilated**].
3) Adjusting Key: As required for calibration and cover screws.

2.8 STATUS SENSORS

A. Status Inputs for Fans: Differential-pressure switch with pilot-duty rating and with adjustable range of 0- to 5-inch wg.

B. Status Inputs for Pumps: Differential-pressure switch with pilot-duty rating and with adjustable pressure-differential range of 8 to 60 psig, piped across pump.

C. Status Inputs for Electric Motors: Comply with ISA 50.00.01, current-sensing fixed- or split-core transformers with self-powered transmitter, adjustable and suitable for 175 percent of rated motor current.

D. Voltage Transmitter (100- to 600-V ac): Comply with ISA 50.00.01, single-loop, self-powered transmitter, adjustable, with suitable range and 1 percent full-scale accuracy.

E. Power Monitor: 3-phase type with disconnect/shorting switch assembly, listed voltage and current transformers, with pulse kilowatt hour output and 4- to 20-mA kW output, with maximum 2 percent error at 1.0 power factor and 2.5 percent error at 0.5 power factor.

F. Current Switches: Self-powered, solid-state with adjustable trip current, selected to match current and system output requirements.

G. Electronic Valve/Damper Position Indicator: Visual scale indicating percent of travel and 2- to 10-V dc, feedback signal.

H. Water-Flow Switches: Bellows-actuated mercury or snap-acting type with pilot-duty rating, stainless-steel or bronze paddle, with appropriate range and differential adjustment, in NEMA 250, Type 1 enclosure.

1. [**Available**]Manufacturers:

a. BEC Controls Corporation.
b. I.T.M. Instruments Inc.
c. <Insert manufacturer's name.>

2.9 GAS DETECTION EQUIPMENT

A. [**Available**]Manufacturers:

1. B. W. Technologies.
2. CEA Instruments, Inc.
3. Ebtron, Inc.
4. Gems Sensors Inc.
5. Greystone Energy Systems Inc.
6. Honeywell International Inc.; Home & Building Control.
7. INTEC Controls, Inc.
8. I.T.M. Instruments Inc.
9. MSA Canada Inc.
10. QEL/Quatrosense Environmental Limited.
11. Sauter Controls Corporation.
12. Sensidyne, Inc.
13. TSI Incorporated.
14. Vaisala.
15. Vulcain Inc.
16. <Insert manufacturer's name.>

B. Carbon Monoxide Detectors: Single or multichannel, dual-level detectors using solid-state plug-in sensors with a 3-year minimum life; suitable over a temperature range of 32 to 104 deg F; with 2 factory-calibrated alarm levels at [**50 and 100**] [**35 and 200**] ppm.

C. Carbon Dioxide Sensor and Transmitter: Single detectors using solid-state infrared sensors; suitable over a temperature range of 23 to 130 deg F and calibrated for 0 to 2 percent, with continuous or averaged reading, 4- to 20-mA output;, for wall mounting.

D. Occupancy Sensor: Passive infrared, with time delay, daylight sensor lockout, sensitivity control, and 180-degree field of view with vertical sensing adjustment; for flush mounting.

2.10 THERMOSTATS

A. [**Available**]Manufacturers:

1. Erie Controls.
2. Danfoss Inc.; Air-Conditioning and Refrigeration Div.
3. Heat-Timer Corporation.
4. Sauter Controls Corporation.
5. tekmar Control Systems, Inc.
6. Theben AG - Lumilite Control Technology, Inc.
7. <Insert manufacturer's name.>

B. Electric, solid-state, microcomputer-based room thermostat with remote sensor.

1. Automatic switching from heating to cooling.
2. Preferential rate control to minimize overshoot and deviation from set point.
3. Set up for four separate temperatures per day.

4. Instant override of set point for continuous or timed period from 1 hour to 31 days.
5. Short-cycle protection.
6. Programming based on [weekday, Saturday, and Sunday] [every day of week].
7. Selection features include degree F or degree C display, 12- or 24-hour clock, keyboard disable, remote sensor, and fan on-auto.
8. Battery replacement without program loss.
9. Thermostat display features include the following:

    a. Time of day.
    b. Actual room temperature.
    c. Programmed temperature.
    d. Programmed time.
    e. Duration of timed override.
    f. Day of week.
    g. System mode indications include "heating," "off," "fan auto," and "fan on."

C. Low-Voltage, On-Off Thermostats: NEMA DC 3, 24-V, bimetal-operated, mercury-switch type, with adjustable or fixed anticipation heater, concealed set-point adjustment, 55 to 85 deg F set-point range, and 2 deg F maximum differential.

D. Line-Voltage, On-Off Thermostats: Bimetal-actuated, open contact or bellows-actuated, enclosed, snap-switch or equivalent solid-state type, with heat anticipator; listed for electrical rating; with concealed set-point adjustment, 55 to 85 deg F set-point range, and 2 deg F maximum differential.

1. Electric Heating Thermostats: Equip with off position on dial wired to break ungrounded conductors.
2. Selector Switch: Integral, manual on-off-auto.

E. Remote-Bulb Thermostats: On-off or modulating type, liquid filled to compensate for changes in ambient temperature; with copper capillary and bulb, unless otherwise indicated.

1. Bulbs in water lines with separate wells of same material as bulb.
2. Bulbs in air ducts with flanges and shields.
3. Averaging Elements: Copper tubing with either single- or multiple-unit elements, extended to cover full width of duct or unit; adequately supported.
4. Scale settings and differential settings are clearly visible and adjustable from front of instrument.
5. On-Off Thermostat: With precision snap switches and with electrical ratings required by application.
6. Modulating Thermostats: Construct so complete potentiometer coil and wiper assembly is removable for inspection or replacement without disturbing calibration of instrument.

F. Fire-Protection Thermostats: Listed and labeled by an NRTL acceptable to authorities having jurisdiction; with fixed or adjustable settings to operate at not less than 75 deg F above normal maximum operating temperature, and the following:

1. Reset: Manual.
2. Reset: Automatic, with control circuit arranged to require manual reset at central control panel; with pilot light and reset switch on panel labeled to indicate operation.

G. Room Thermostat Cover Construction: Manufacturer's standard locking covers.

1. Set-Point Adjustment: [**Concealed**] [**Exposed**].
2. Set-Point Indication: [**Concealed**] [**Keyed**] [**Exposed**].
3. Thermometer: [Concealed] [Exposed] [Red-reading glass] [Spiral bimetal].
4. Color: <Insert color from manufacturer's full range.>
5. Orientation: [**Vertical**] [**Horizontal**].

H. Room thermostat accessories include the following:

1. Insulating Bases: For thermostats located on exterior walls.
2. Thermostat Guards: [Locking; heavy-duty, transparent plastic; mounted on separate base] [Metal wire, tamperproof] [Locking, solid metal, ventilated].
3. Adjusting Key: As required for calibration and cover screws.
4. Set-Point Adjustment: 1/2-inch- diameter, adjustment knob.

I. Immersion Thermostat: Remote-bulb or bimetal rod-and-tube type, proportioning action with adjustable throttling range and adjustable set point.

J. Airstream Thermostats: Two-pipe, fully proportional, single-temperature type; with adjustable set point in middle of range, adjustable throttling range, plug-in test fitting or permanent pressure gage, remote bulb, bimetal rod and tube, or averaging element.

K. Electric, Low-Limit Duct Thermostat: Snap-acting, single-pole, single-throw, manual- [**or automatic-**]reset switch that trips if temperature sensed across any 12 inches of bulb length is equal to or below set point.

1. Bulb Length: Minimum 20 feet.
2. Quantity: One thermostat for every 20 sq. ft. of coil surface.

L. Electric, High-Limit Duct Thermostat: Snap-acting, single-pole, single-throw, manual- [**or automatic-**]reset switch that trips if temperature sensed across any 12 inches of bulb length is equal to or above set point.

1. Bulb Length: Minimum 20 feet.
2. Quantity: One thermostat for every 20 sq. ft. of coil surface.

M. Heating/Cooling Valve-Top Thermostats: Proportional acting for proportional flow, with molded-rubber diaphragm, remote-bulb liquid-filled element, direct and reverse acting at minimum shutoff pressure of 25 psig, and cast housing with position indicator and adjusting knob.

2.11 HUMIDISTATS

A. [**Available**]Manufacturers:

1. MAMAC Systems, Inc.
2. ROTRONIC Instrument Corp.
3. <Insert manufacturer's name.>

B. Duct-Mounting Humidistats: Electric insertion, 2-position type with adjustable, 2 percent throttling range, 20 to 80 percent operating range, and single- or double-pole contacts.

2.12 ACTUATORS

A. Electric Motors: Size to operate with sufficient reserve power to provide smooth modulating action or two-position action.

1. Comply with requirements in Division 23 Section "Common Motor Requirements for HVAC Equipment."
2. Permanent Split-Capacitor or Shaded-Pole Type: Gear trains completely oil immersed and sealed. Equip spring-return motors with integral spiral-spring mechanism in housings designed for easy removal for service or adjustment of limit switches, auxiliary switches, or feedback potentiometer.
3. Nonspring-Return Motors for Valves Larger Than NPS 2-1/2: Size for running torque of 150 in. x lbf and breakaway torque of 300 in. x lbf.

4. Spring-Return Motors for Valves Larger Than NPS 2-1/2: Size for running and breakaway torque of 150 in. x lbf.
5. Nonspring-Return Motors for Dampers Larger Than 25 Sq. Ft.: Size for running torque of 150 in. x lbf and breakaway torque of 300 in. x lbf.
6. Spring-Return Motors for Dampers Larger Than 25 Sq. Ft.: Size for running and breakaway torque of 150 in. x lbf.

B. Electronic Actuators: Direct-coupled type designed for minimum 60,000 full-stroke cycles at rated torque.

1. [**Available**]Manufacturers:

   a. Belimo Aircontrols (USA), Inc.
   b. <Insert manufacturer's name.>

2. Valves: Size for torque required for valve close off at maximum pump differential pressure.
3. Dampers: Size for running torque calculated as follows:

   a. Parallel-Blade Damper with Edge Seals: 7 inch-lb/sq. ft. of damper.
   b. Opposed-Blade Damper with Edge Seals: 5 inch-lb/sq. ft. of damper.
   c. Parallel-Blade Damper without Edge Seals: 4 inch-lb/sq. ft of damper.
   d. Opposed-Blade Damper without Edge Seals: 3 inch-lb/sq. ft. of damper.
   e. Dampers with 2- to 3-Inch wg of Pressure Drop or Face Velocities of 1000 to 2500 fpm: Increase running torque by 1.5.
   f. Dampers with 3- to 4-Inch wg of Pressure Drop or Face Velocities of 2500 to 3000 fpm: Increase running torque by 2.0.

4. Coupling: V-bolt and V-shaped, toothed cradle.
5. Overload Protection: Electronic overload or digital rotation-sensing circuitry.
6. Fail-Safe Operation: Mechanical, spring-return mechanism. Provide external, manual gear release on nonspring-return actuators.
7. Power Requirements (Two-Position Spring Return): [**24**] [**120**] [**230**]-V ac.
8. Power Requirements (Modulating): Maximum 10 VA at 24-V ac or 8 W at 24-V dc.
9. Proportional Signal: 2- to 10-V dc or 4 to 20 mA, and 2- to 10-V dc position feedback signal.
10. Temperature Rating: [**Minus 22 to plus 122 deg F**] [**40 to 104 deg F**].
11. Temperature Rating (Smoke Dampers): Minus 22 to plus 250 deg F.
12. Run Time: [12 seconds open, 5 seconds closed] [30 seconds] [60 seconds] [120 seconds].

2.13 CONTROL VALVES

A. [**Available**]Manufacturers:

1. Danfoss Inc.; Air Conditioning & Refrigeration Div.
2. Erie Controls.
3. Hayward Industrial Products, Inc.
4. Magnatrol Valve Corporation.
5. Neles-Jamesbury.
6. Parker Hannifin Corporation; Skinner Valve Division.
7. Pneuline Controls.
8. Sauter Controls Corporation.
9. <Insert manufacturer's name.>

B. Control Valves: Factory fabricated, of type, body material, and pressure class based on maximum pressure and temperature rating of piping system, unless otherwise indicated.

C. Hydronic system globe valves shall have the following characteristics:

1. NPS 2 and Smaller: Class [**125**] [**250**] bronze body, bronze trim, rising stem, renewable composition disc, and screwed ends with backseating capacity repackable under pressure.
2. NPS 2-1/2 and Larger: Class 125 iron body, bronze trim, rising stem, plug-type disc, flanged ends, and renewable seat and disc.
3. Internal Construction: Replaceable plugs and stainless-steel or brass seats.

    a. Single-Seated Valves: Cage trim provides seating and guiding surfaces for plug on top and bottom.
    b. Double-Seated Valves: Balanced plug; cage trim provides seating and guiding surfaces for plugs on top and bottom.

4. Sizing: [**3-psig**] [**5-psig**] **<Insert value>** maximum pressure drop at design flow rate or the following:

    a. Two Position: Line size.
    b. Two-Way Modulating: Either the value specified above or twice the load pressure drop, whichever is more.
    c. Three-Way Modulating: Twice the load pressure drop, but not more than value specified above.

5. Flow Characteristics: Two-way valves shall have equal percentage characteristics; three-way valves shall have linear characteristics.
6. Close-Off (Differential) Pressure Rating: Combination of actuator and trim shall provide minimum close-off pressure rating of 150 percent of total system (pump) head for two-way valves and 100 percent of pressure differential across valve or 100 percent of total system (pump) head.

D. Butterfly Valves: 200-psig, 150-psig maximum pressure differential, ASTM A 126 cast-iron or ASTM A 536 ductile-iron body and bonnet, extended neck, stainless-steel stem, field-replaceable EPDM or Buna N sleeve and stem seals.

1. Body Style: [**Wafer**] [**Lug**] [**Grooved**].
2. Disc Type: [Nickel-plated ductile iron] [Aluminum bronze] [Elastomer-coated ductile iron] [Epoxy-coated ductile iron].
3. Sizing: 1-psig maximum pressure drop at design flow rate.

E. Terminal Unit Control Valves: Bronze body, bronze trim, two or three ports as indicated, replaceable plugs and seats, and union and threaded ends.

1. Rating: Class 125 for service at 125 psig and 250 deg F operating conditions.
2. Sizing: 3-psig maximum pressure drop at design flow rate, to close against pump shutoff head.
3. Flow Characteristics: Two-way valves shall have equal percentage characteristics; three-way valves shall have linear characteristics.

F. Self-Contained Control Valves: Bronze body, bronze trim, two or three ports as indicated, replaceable plugs and seats, and union and threaded ends.

1. Rating: Class 125 for service at 125 psig and 250 deg F operating conditions.
2. Thermostatic Operator: [**Wax**] [**Liquid**]-filled [**integral**] [**remote**] sensor with [**integral**] [**remote**] adjustable dial.

2.14 DAMPERS

A. [**Available**]Manufacturers:

1. Air Balance Inc.
2. Don Park Inc.; Autodamp Div.
3. TAMCO (T. A. Morrison & Co. Inc.).
4. United Enertech Corp.
5. Vent Products Company, Inc.
6. <Insert manufacturer's name.>

B. Dampers: AMCA-rated, [**parallel**] [**opposed**]-blade design; 0.108-inch- minimum thick, galvanized-steel or 0.125-inch- minimum thick, extruded-aluminum frames with holes for duct mounting; damper blades shall not be less than 0.064-inch- thick galvanized steel with maximum blade width of 8 inches and length of 48 inches.

1. Secure blades to 1/2-inch- diameter, zinc-plated axles using zinc-plated hardware, with [**oil-impregnated sintered bronze**] [**nylon**] blade bearings, blade-linkage hardware of zinc-plated

steel and brass, ends sealed against spring-stainless-steel blade bearings, and thrust bearings at each end of every blade.

2. Operating Temperature Range: From minus 40 to plus 200 deg F.
3. Edge Seals, Standard Pressure Applications: Closed-cell neoprene.
4. Edge Seals, Low-Leakage Applications: Use inflatable blade edging or replaceable rubber blade seals and spring-loaded stainless-steel side seals, rated for leakage at less than 10 cfm per sq. ft. of damper area, at differential pressure of 4-inch wg when damper is held by torque of 50 in. x lbf; when tested according to AMCA 500D.

2.15 CONTROL CABLE

A. Electronic and fiber-optic cables for control wiring are specified in Division 27 Section "Communications Horizontal Cabling."

PART 3 - EXECUTION

3.1 INSTALLATION

A. Verify location of thermostats, humidistats, and other exposed control sensors with Drawings and room details before installation. Install devices [**48 inches**] [**60 inches**] <**Insert dimension**> above the floor.

1. Install averaging elements in ducts and plenums in crossing or zigzag pattern.

B. Install guards on thermostats in the following locations:

1. Entrances.
2. Public areas.
3. Where indicated.

C. Install automatic dampers according to Division 23 Section "Air Duct Accessories."

D. Install damper motors on outside of duct in warm areas, not in locations exposed to outdoor temperatures.

E. Install labels and nameplates to identify control components according to Division 23 Section "Identification for HVAC Piping and Equipment."

F. Install hydronic instrument wells, valves, and other accessories according to Division 23 Section "Hydronic Piping."

G. Install refrigerant instrument wells, valves, and other accessories according to Division 23 Section "Refrigerant Piping."

H. Install duct volume-control dampers according to Division 23 Sections specifying air ducts.

I. Install electronic and fiber-optic cables according to Division 27 Section "Communications Horizontal Cabling."

3.2 ELECTRICAL WIRING AND CONNECTION INSTALLATION

A. Install raceways, boxes, and cabinets according to Division 26 Section "Raceway and Boxes for Electrical Systems."

B. Install building wire and cable according to Division 26 Section "Low-Voltage Electrical Power Conductors and Cables."

C. Install signal and communication cable according to Division 27 Section "Communications Horizontal Cabling."

1. Conceal cable, except in mechanical rooms and areas where other conduit and piping are exposed.
2. Install exposed cable in raceway.
3. Install concealed cable in raceway.
4. Bundle and harness multiconductor instrument cable in place of single cables where several cables follow a common path.

5. Fasten flexible conductors, bridging cabinets and doors, along hinge side; protect against abrasion. Tie and support conductors.
6. Number-code or color-code conductors for future identification and service of control system, except local individual room control cables.
7. Install wire and cable with sufficient slack and flexible connections to allow for vibration of piping and equipment.

D. Connect manual-reset limit controls independent of manual-control switch positions. Automatic duct heater resets may be connected in interlock circuit of power controllers.

E. Connect hand-off-auto selector switches to override automatic interlock controls when switch is in hand position.

3.3 FIELD QUALITY CONTROL

A. Manufacturer's Field Service: Engage a factory-authorized service representative to inspect[**, test, and adjust**] field-assembled components and equipment installation, including connections[**, and to assist in field testing**]. Report results in writing.

B. Perform the following field tests and inspections and prepare test reports:

1. Operational Test: After electrical circuitry has been energized, start units to confirm proper unit operation. Remove and replace malfunctioning units and retest.
2. Test and adjust controls and safeties.
3. Test calibration of controllers by disconnecting input sensors and stimulating operation with compatible signal generator.
4. Test each point through its full operating range to verify that safety and operating control set points are as required.
5. Test each control loop to verify stable mode of operation and compliance with sequence of operation. Adjust PID actions.
6. Test each system for compliance with sequence of operation.
7. Test software and hardware interlocks.

C. DDC Verification:

1. Verify that instruments are installed before calibration, testing, and loop or leak checks.
2. Check instruments for proper location and accessibility.
3. Check instrument installation for direction of flow, elevation, orientation, insertion depth, and other applicable considerations.
4. Check instrument tubing for proper fittings, slope, material, and support.
5. Check pressure instruments, piping slope, installation of valve manifold, and self-contained pressure regulators.
6. Check temperature instruments and material and length of sensing elements.
7. Check control valves. Verify that they are in correct direction.
8. Check air-operated dampers. Verify that pressure gages are provided and that proper blade alignment, either parallel or opposed, has been provided.
9. Check DDC system as follows:

a. Verify that DDC controller power supply is from emergency power supply, if applicable.

b. Verify that wires at control panels are tagged with their service designation and approved tagging system.
c. Verify that spare I/O capacity has been provided.
d. Verify that DDC controllers are protected from power supply surges.

D. Replace damaged or malfunctioning controls and equipment and repeat testing procedures.

3.4 DEMONSTRATION

A. Engage a factory-authorized service representative to train Owner's maintenance personnel to adjust, operate, and maintain HVAC instrumentation and controls. Refer to Division 01 Section "Demonstration and Training."

END OF SECTION 230900

SECTION 230993 - SEQUENCE OF OPERATIONS FOR HVAC CONTROLS

PART 1 - GENERAL

1. SUMMARY

a. ***This Section includes control sequences for HVAC systems, subsystems, and equipment.***

b. ***See Division 23 Section "Instrumentation and Control for HVAC" for control equipment and devices and for submittal requirements.***

2. HEATING CONTROL SEQUENCES

a. ***Heating-Water Supply Temperature Control:***

1) Input Device: [**Thermostat**] [**Thermistor temperature sensor**] [**Resistance temperature sensor**].
2) Output Device: Control valve.
3) Action: Modulate control valve to maintain heating-water supply temperature.
4) Display:

a) Heating-water supply temperature.
b) Heating-water supply temperature set point.
c) Control-valve position.

b. ***Heating-Water Supply Temperature Reset:***

1) Input Device: [**Electric, outdoor-air-reset controller**] [**Outdoor-air sensor**].
2) Output Device: [**Unitary controller**] [**DDC system software**].
3) Action: Reset heating-water supply temperature in straight-line relationship with outdoor-air temperature for the following conditions:

a) [**195 deg F**] <**Insert highest heating temperature**> heating water when outdoor-air temperature is [**minus 30 deg F**] <**Insert lowest outdoor-air temperature**>.
b) [**130 deg F**] <**Insert lowest heating temperature**> heating water when outdoor-air temperature is 75 deg F.
c) [**150 deg F**] <**Insert temperature**> minimum, heating-water temperature.

4) Display:

a) Outdoor-air temperature.
b) Heating-water supply temperature.
c) Heating-water supply temperature set point.

c. ***Control Primary Circulating Pump(s):***

1) Input Device: [**Thermostat**] [**DDC system**].
2) Output Device: [**Starter**] [**DDC system command to starter**] relay.
3) Action: Energize pump(s) at outdoor-air temperatures below [**65 deg F**] <**Insert temperature**>.
4) Display:

a) Outdoor-air temperature.
b) Operating status of primary circulating pump(s).

3. CENTRAL REFRIGERATION EQUIPMENT SEQUENCES

a. ***Start and Stop Condenser-Water Pump(s):***

1) Enable: Allow pump to start when water is in cooling tower:

a) Input Device: Water pressure transducer.
b) Output Device: Hard wired through motor starter[**; DDC system binary output**].
c) Action: Confirm water in cooling-tower sump.

2) Enable: When outdoor-air temperature conditions are met:

a) Input Device: [**Space thermostat**] [**DDC system outdoor-air temperature**].
b) Output Device: Hard wired through motor starter[**; DDC system binary output**].
c) Action: Confirm outdoor-air temperature is above 50 deg F.

3) Enable: When demand conditions are met:

a) Input Device: DDC system software demand.
b) Action: Confirm cooling demand from ventilation system(s).

4) Initiate:

a) Input Device: [**Time clock**] [**DDC system time schedule**].
b) Output Device: [**Time clock**] [**Binary output**].
c) Action: Energize pump(s).

5) Display:

a) Low-level cooling-tower sump alarm.
b) Outdoor-air temperature.
c) Cooling (software) demand indication.

d) Time and time schedule.
e) Condenser-water pump(s) on-off status.
f) Condenser-water pump(s) on-off indication.

b. ***Start and Stop Chilled-Water Pump(s):***

1) Input Device: Flow switch in condenser-water circuit.
2) Output Device: [**Starter**] [**DDC system command to starter**] relay.
3) Action: Energize pump(s).
4) Display:

a) Chilled-water flow indication.
b) Chilled-water pump(s) on-off status.
c) Chilled-water pump(s) on-off indication.

c. ***Start and Stop Cooling-Tower Fans(s):***

1) Input Device: Flow switch in condenser-water circuit.
2) Output Device: [**Starter**] [**DDC system command to starter**] relay.
3) Action: Energize fan(s).
4) Display:

a) Condenser-water flow indication.
b) Cooling-tower fan(s) on-off indication.

d. ***Start and Stop Chiller(s):***

1) Input Device: Flow switches in condenser-water and chilled-water circuit.
2) Output Device: [**Chiller**] [**DDC system command to chiller**] terminal strip.
3) Action: Energize chiller internal control circuit.
4) Display:

a) Condenser-water flow indication.
b) Chilled-water flow indication.
c) Chiller(s) on-off status.
d) Chiller(s) on-off indication.
e) Chilled-water supply and return temperature.
f) Chilled-water temperature control-point adjustment.

e. ***Alternate Chiller(s):***

1) Input Device: [**Electric alternator**] [**DDC system software**].
2) Output Device: [**Chiller**] [**DDC system command to chiller**] terminal strip.
3) Action: Operate chiller(s) on lead-lag, alternating each startup.

4. **Action: Adding and dropping chiller(s) as follows: <Insert sequence and parameters.>**

5. **Display: Chiller(s) on-off indication.**

B. **Alarm Chiller(s) Start Failure:**

1. **Input Device: Chiller [control panel terminal strip contact] [software signal].**

2. **Output Device: [Analog control panel] [DDC system alarm].**

3. **Action: Signal alarm.**

4. **Display: Chiller "failure-to-start" indication.**

C. **Chilled-Water Level:**

1. **Input Device: Expansion tank [level switch] [liquid sensor].**

2. **Output Device: [Electric relay signal to alarm panel] [DDC system alarm].**

3. **Action: Signal alarm.**

4. **Display: Expansion tank low-level alarm.**

D. **Chilled-Water Supply Temperature:**

1. **Input Device: Temperature [sensor] [transmitter] in common chilled-water supply piping.**

2. **Output Device: [Integral chiller controls] [DDC system signal to chiller control panel].**

3. **Action: Maintain constant leaving chilled-water temperature[reset according to highest cooling demand].**

E. **Display: Chilled-water supply temperature.**

F. **Condenser-Water Temperature:**

1. **Input Device: Temperature [sensor] [transmitter] in cooling-tower sump.**

2. **Output Device: [Bypass control valve] [Cooling-tower fan starter relay] [DDC system command to cooling-tower fan starter relay].**

3. **Action: Modulate control valve open to cooling tower and closed to bypass and cycle tower fan(s) on[to low speed and then to high speed] to maintain [**65 deg F**] [**70 deg F**] sump temperature.[Close valve when unoccupied.]**

4. **Display:**

   a. ***Condenser-water sump (return) control-point temperature.***

   b. ***Condenser-water sump (return) temperature.***

   c. ***Control-valve position.***

   d. ***Cooling-tower fan(s) on-off indication.***

   e. ***Condenser-water supply temperature.***

G. **Cooling-Tower Sump Heater:**

1. **Input Device: Sump temperature [sensor] [transmitter].**

2. **Output Device: [Electric relay] [DDC system command to electric relay] [and solenoid valve].**

3. **Action: Energize sump heater[; drain sump on low temperature].**

4. **Display:**

   a. ***Cooling-tower sump temperature.***

   b. ***Cooling-tower sump heater on-off indication.***

   c. ***Cooling-tower dump indication.***

H. **Operator Station Display: Indicate the following on operator work-station display terminal:**

1. **DDC system graphic.**
2. **DDC system status, on-off.**
3. **Low-level cooling-tower sump alarm.**
4. **Outdoor-air temperature.**
5. **Cooling (software) demand indication.**
6. **Time and time schedule.**
7. **Condenser-water pump(s) on-off status.**
8. **Condenser-water pump(s) on-off indication.**
9. **Condenser-water flow indication.**
10. **Chilled-water pump(s) on-off status.**
11. **Chilled-water pump(s) on-off indication.**
12. **Cooling-tower fan(s) on-off indication.**
13. **Chilled-water flow indication.**
14. **Refrigeration machine on-off indication.**
15. **Chilled-water supply temperature.**
16. **Chilled-water return temperature.**
17. **Chilled-water temperature control-point adjustment.**
18. **Chiller(s) on-off status.**
19. **Chiller(s) on-off indication.**

20. **Chiller "failure-to-start" indication.**

21. **Expansion tank low-level alarm.**

22. **Condenser-water sump (return) control-point temperature.**

23. **Condenser-water sump (return) temperature.**

24. **Condenser-water control-valve position.**

25. **Cooling-tower fan(s) on-off indication.**

26. **Condenser-water supply temperature.**

27. **Cooling-tower sump temperature.**

28. **Cooling-tower sump heater on-off indication.**

29. **Cooling-tower dump indication.**

30. **Chilled-water pressure drop through chiller.**

31. **Entering condenser-water temperature.**

32. **Leaving condenser-water temperature.**

33. **Condenser-water pressure drop through chiller.**

34. **Chiller condenser-water supply and return temperature.**

35. **Chiller chilled-water supply and return temperature.**

36. **System capacity in tons.**

1.2 *AIR-HANDLING-UNIT CONTROL SEQUENCES*

A. Start and Stop Supply Fan(s):

1. **Enable: Freeze Protection:**

a. ***Input Device: Duct-mounted averaging element thermostat, located before supply fan.***

b. ***Output Device: Hard wired through motor starter; [analog alarm panel] [DDC system alarm].***

c. ***Action: Allow start if duct temperature is above 37 deg F; signal alarm if fan fails to start as commanded.***

2. **Enable: High-Temperature Protection:**

a. ***Input Device: Duct-mounted thermostat, located in return air.***

b. ***Output Device: Hard wired through motor starter; [analog alarm panel] [DDC system alarm].***

c. ***Action: Allow start if duct temperature is below 300 deg F.***

3. **Enable: Smoke Control:**

a. ***Input Device: Duct-mounted smoke detector, located in [return] [supply] air.***

b. ***Output Device: Hard wired through motor starter; [analog alarm panel] [DDC system alarm].***

c. ***Action: Allow start if duct is free of products of combustion.***

4. **Initiate: Occupied Time Schedule:**

a. ***Input Device: [Time clock] [DDC system time schedule].***

b. ***Output Device: [Time clock] [Binary output] to motor starter.***

c. ***Action: Energize fan(s).***

5. **Initiate: Unoccupied Time Schedule:**

a. ***Input Device: [Room thermostat] [DDC system demand].***

b. ***Output Device: [Room thermostat] [Binary output] to motor starter.***

c. ***Action: Energize fan(s).***

6. **Unoccupied Ventilation:**

a. ***Input Device: [Time clock and room thermostat] [DDC system time schedule and output].***

b. ***Output Device: [Room thermostat] [DDC system binary output] to motor starter.***

c. ***Action: Cycle fan(s) during unoccupied periods.***

7. **Display: Supply-fan on-off indication.**

B. **Supply Fan(s) Variable-Volume Control:**

1. **Occupied Time Schedule:**

a. ***Input Device: [Time clock] [DDC system time schedule].***

b. ***Output Device: [Time clock] [Binary output].***

c. ***Action: Enable control.***

2. **Volume Control:**

a. ***Input Device: [Static-pressure transmitter] [Differential-pressure switch] sensing supply-duct static pressure referenced to conditioned-space static pressure.***

b. ***Output Device: [Receiver controller] [DDC system analog output] to modulating damper actuator. Set inlet guide vanes to [minimum] [closed] position when fan is stopped.***

c. ***Action: Maintain constant supply-duct static pressure.***

3. **Volume Control:**

a. ***Input Device: [Static-pressure transmitter] [Differential-pressure switch] sensing supply-duct static pressure referenced to conditioned-space static pressure.***

b. ***Output Device: [Receiver controller] [DDC system analog output] to motor speed controller. Set variable-speed drive to minimum speed when fan is stopped.***

c. ***Action: Maintain constant supply-duct static pressure.***

4. **High Pressure:**

a. ***Input Device: Static-pressure transmitter sensing supply-duct static pressure referenced to static pressure outside the duct.***

b. ***Output Device: [Receiver controller] [DDC system binary output] to [alarm panel] [motor starter].***

c. ***Action: Stop fan and signal alarm when static pressure rises above excessive-static-pressure set point.***

5. **Display:**

a. ***Supply-fan-discharge static-pressure indication.***

b. ***Supply-fan-discharge static-pressure set point.***

c. ***Supply-fan airflow rate.***

d. ***Supply-fan [inlet vane position] [speed].***

C. **Start and Stop Return Fan(s):**

1. **Initiate: Occupied Time Schedule:**

a. ***Input Device: [Time clock] [DDC system time schedule].***

b. ***Output Device: [Time clock] [Binary output] to motor starter.***

c. ***Action: Energize fans when supply fans are energized.***

2. **Initiate: Unoccupied Time Schedule:**

a. ***Input Device: [Room thermostat] [DDC system demand].***

b. ***Output Device: [Room thermostat] [Binary output] to motor starter.***

c. ***Action: Energize fans when supply fans are energized.***

3. **Unoccupied Ventilation:**

a. ***Input Device: [Time clock and room thermostat] [DDC system time schedule and output].***

b. ***Output Device: [Room thermostat] [DDC system binary output] to motor starter.***

c. ***Action: Cycle fan(s) during unoccupied periods.***

4. **Display: Return-fan on-off indication.**

D. **Return Fan(s) Variable-Volume Control:**

1. **Occupied Time Schedule:**

a. ***Input Device: [Time clock] [DDC system time schedule].***

b. ***Output Device: [Time clock] [Binary output].***

c. ***Action: Enable control.***

2. **Volume Control:**

a. ***Input Device: [Static-pressure transmitter] [Differential-pressure switch] sensing building static pressure referenced to outdoor static pressure.***

b. ***Output Device: [Receiver controller] [DDC system analog output] to modulating damper actuator. Set inlet guide vanes to [minimum] [closed] position when fan is stopped.***

c. ***Action: Maintain constant building static pressure.***

3. **Volume Control:**

a. ***Input Device: [Static-pressure transmitter] [Differential-pressure switch] sensing building static pressure referenced to outdoor static pressure.***

b. ***Output Device: [Receiver controller] [DDC system analog output] to motor speed controller. Set variable-speed drive to minimum speed when fan is stopped.***

c. ***Action: Maintain constant building static pressure.***

4. **Display:**

a. ***Return-air static-pressure indication.***

b. ***Return-air static-pressure set point.***

c. ***Return-fan airflow rate.***

d. ***Return-fan [inlet vane position] [speed].***

e. ***Building static-pressure indication.***

f. ***Building static-pressure set point.***

E. **Return Fan(s) Variable-Volume Control:**

1. **Occupied Time Schedule:**

a. ***Input Device: [Time clock] [DDC system time schedule].***

b. ***Output Device: [Time clock] [Binary output].***

c. ***Action: Enable control.***

2. **Volume Control:**

a. ***Input Device: [Static-pressure transmitter] [Differential-pressure switch] sensing building static pressure referenced to outdoor static pressure.***

b. ***Output Device: [Receiver controller] [DDC system analog output] to modulating damper actuator. Set inlet guide vanes to [minimum] [closed] position when fan is stopped.***

c. ***Action: Maintain constant building static pressure.***

1) Volume Control:

a) Input Device: [**Static-pressure transmitter**] [**Differential-pressure switch**] sensing building static pressure referenced to outdoor static pressure.
b) Output Device: [**Receiver controller**] [**DDC system analog output**] to motor speed controller. Set variable-speed drive to minimum speed when fan is stopped.
c) Action: Maintain constant building static pressure.

2) Display:

a) Return-fan-discharge static-pressure indication.
b) Return-fan-discharge static-pressure set point.
c) Return-fan airflow rate.
d) Return-fan [**inlet vane position**] [**speed**].

d. ***Preheat Coil:***

1) Freeze Protection:

a) Input Device: Duct-mounted averaging element thermostat, located after preheat coil.
b) Output Device: Hard wired through motor starter; [**analog alarm panel**] [**DDC system alarm**].
c) Action: Allow start if duct temperature is above 33 deg F.

2) Occupied Time Schedule:

a) Input Device: [**Time clock**] [**DDC system time schedule**].
b) Output Device: [**Time clock**] [**Binary output**] to motor starter.
c) Action: Energize coil circulating pump(s).

3) [**Supply**] [**Discharge**]-Air Temperature:

a) Input Device: [**Time clock and duct-mounted thermostat**] [**DDC system time schedule and electronic temperature sensor**].
b) Output Device: Modulating control valve.
c) Action: Maintain air temperature set point of 55 deg F.

4) Unoccupied Time Schedule:

a) Input Device: [**Time clock and duct-mounted thermostat mounted in outdoor air**] [**DDC system time schedule and outdoor-air temperature**].
b) Output Device: [**Time clock**] [**Binary output**] to motor starter.
c) Action: Energize coil circulating pump(s) when outdoor-air temperature falls below 35 deg F.

5) Display:

a) Preheat-coil air-temperature indication.
b) Preheat-coil air-temperature set point.

c) Preheat-coil pump operation indication.
d) Preheat-coil control-valve position.

e. ***Mixed-Air Control:***

1) Occupied Time Schedule:

a) Input Device: [**Time clock**] [**DDC system time schedule**].
b) Output Device: DDC system output.
c) Action: Enable control.

2) Minimum Position:

a) Input Device: [**Time clock**] [**DDC system time schedule**].
b) Output Device: [**Receiver controller**] [**DDC system analog output**] to modulating damper actuator(s).
c) Action: Open [**minimum outdoor-air dampers**] [**outdoor-air dampers to minimum position**].

3) Heating Reset:

a) Input Device: [**Room thermostat**] [**DDC system software**].
b) Output Device: [**Receiver controller**] [**DDC system analog output**] to modulating damper actuator(s).
c) Action: [**Close minimum outdoor-air dampers**] [**Set outdoor-air dampers to minimum position**].

4) [**Supply**] [**Mixed**]-Air Temperature:

a) Input Device: [**Duct-mounted thermostat**] [**Electronic temperature sensor**].
b) Output Device: [**Receiver controller**] [**DDC system analog output**] to modulating damper actuator(s).
c) Action: Modulate outdoor-, return-, and relief-air dampers to maintain air temperature set point of 55 deg F.

5) Cooling Reset:

a) Input Device: Outdoor- and return-air, duct-mounted [**thermostats**] [**electronic temperature sensors**].
b) Output Device: [**Receiver controller**] [**DDC system analog output**] to damper actuator(s).
c) Action: Set outdoor-air dampers to minimum position when outdoor-air [**temperature exceeds return-air temperature**] [**enthalpy exceeds return-air enthalpy**].

6) Unoccupied Time Schedule:

a) Input Device: [**Time clock**] [**DDC system time schedule**].
b) Output Device: [**Receiver controller**] [**DDC system analog output**] to modulating damper actuator(s).

c) Action: Position outdoor- and relief-air dampers closed and return-air dampers open.

7) Display:

a) Mixed-air-temperature indication.
b) Mixed-air-temperature set point.
c) Mixed-air damper position.

f. ***Humidifier:***

1) Occupied Time Schedule:

a) Input Device: [**Time clock**] [**DDC system time schedule**] and airflow switch
b) Output Device: DDC system output.
c) Action: Enable control.

2) Humidity:

a) Input Device: [**Room humidistat**] [**Return-air, duct-mounted humidistat**] [**DDC system**].
b) Output Device: [**Receiver controller**] [**DDC system analog output**] [**enables humidifier**] [**modulates control valve to maintain humidity**] [**cycles pump to maintain humidity**] [**cycles pump and modulates control valve to maintain humidity**] in straight-line relationship for the following conditions:

1) 20 percent when outdoor-air temperature is [**minus 30 deg F**] <**Insert temperature**>.
2) 40 percent when outdoor-air temperature is [**75 deg F**] <**Insert temperature**>.

c) Action: Modulate outdoor-, return-, and relief-air dampers to maintain air temperature set point of [**55 deg F**] <**Insert temperature**>.

3) Display:

a) Relative humidity indication.
b) Relative humidity set point.
c) Relative humidity control-valve position.

g. ***Filters: During occupied periods, when fan is running, differential air-pressure transmitters exist.***

1) Occupied Time Schedule:

a) Input Device: [**Time clock**] [**DDC system time schedule**].
b) Output Device: [**Electric relay**] [**DDC system output**].

c) Action: Enable control.

2) Differential Pressure:

a) Input Device: [**Differential-pressure switches**] [**Pressure transmitter**].
b) Output Device: [**Analog alarm panel**] [**DDC system alarm**].
c) Action: Signal alarm on low- and high-pressure conditions.

3) Display:

a) Filter air-pressure-drop indication.
b) Filter low-air-pressure set point.
c) Filter high-air-pressure set point.

h. ***Hydronic Heating Coil:***

1) Occupied Time Schedule:

a) Input Device: [**Time clock**] [**DDC system time schedule**].
b) Output Device: [**Time clock**] [**Binary output**].
c) Action: Enable control.

2) [**Supply**] [**Discharge**]-Air Temperature:

a) Input Device: [**Duct-mounted thermostat**] [**Electronic temperature sensor**].
b) Output Device: Normally [**open**] [**closed**] modulating control valve.
c) Action: Maintain supply-air temperature set point of 55 deg F.

3. **Temperature Reset:**

a. ***Input Device: [Duct-mounted thermostat] [Electronic temperature sensor] in return air.***

b. ***Output Device: [Direct to receiver controller] [DDC system] in straight-line relationship for the following conditions:***

1) [**65 deg F**] <**Insert temperature**> when return-air temperature is [**70 deg F**] <**Insert temperature**>.
2) [**55 deg F**] <**Insert temperature**> when return-air temperature is [**75 deg F**] <**Insert temperature**>.

c. ***Action: Reset supply-air temperature set point of 55 deg F.***

4. **Unoccupied Time Schedule:**

   a. ***Input Device: [Time clock and room thermostat] [DDC system time schedule and output].***

   b. ***Output Device: [Room thermostat (cycling fan)] [DDC system binary output].***

   c. ***Action: [Enable normal control] [Return valve to normal position] when fan is cycled on.***

5. **Display:**

   a. ***Fan-discharge air-temperature indication.***

   b. ***Fan-discharge air-temperature set point.***

   c. ***Heating-coil air-temperature indication.***

   d. ***Heating-coil air-temperature set point.***

   e. ***Heating-coil pump operation indication.***

   f. ***Heating-coil control-valve position.***

F. **Hydronic Cooling Coil:**

1. **Occupied Time Schedule:**

   a. ***Input Device: [Time clock] [DDC system time schedule].***

   b. ***Output Device: [Time clock] [Binary output].***

   c. ***Action: Enable control.***

2. **[Supply] [Discharge]-Air Temperature:**

   a. ***Input Device: [Duct-mounted thermostat] [Electronic temperature sensor].***

   b. ***Output Device: Normally [open] [closed] modulating control valve.***

c. ***Action: Maintain supply-air temperature set point of 55 deg F.***

3. **Temperature Reset:**

a. ***Input Device: [Duct-mounted thermostat] [Electronic temperature sensor] in return air.***

b. ***Output Device: [Direct to receiver controller] [DDC system] in straight-line relationship for the following conditions:***

1) [**65 deg F**] <**Insert temperature**> when return-air temperature is [**70 deg F**] <**Insert temperature**>.
2) [**55 deg F**] <**Insert temperature**> when return-air temperature is [**75 deg F**] <**Insert temperature**>.

c. ***Action: Reset supply-air temperature set point of 55 deg F.***

4. **Unoccupied Time Schedule:**

a. ***Input Device: [Time clock] [DDC system time schedule].***

b. ***Output Device: [Time clock] [Binary output].***

c. ***Action: Disable control.***

5. **Display:**

a. ***Fan-discharge air-temperature indication.***

b. ***Fan-discharge air-temperature set point.***

c. ***Cooling-coil air-temperature indication.***

d. ***Cooling-coil air-temperature set point.***

e. ***Cooling-coil control-valve position.***

G. **Coordination of Air-Handling Unit Sequences: Ensure that preheat, mixed-air, heating-coil, and cooling-coil controls have common inputs and do not overlap in function.**

H. **Operator Station Display: Indicate the following on operator workstation display terminal:**

1. **DDC system graphic.**
2. **DDC system on-off indication.**
3. **DDC system occupied/unoccupied mode.**
4. **Outdoor-air-temperature indication.**
5. **Supply-fan on-off indication.**
6. **Supply-fan-discharge static-pressure indication.**
7. **Supply-fan-discharge static-pressure set point.**
8. **Supply-fan airflow rate.**
9. **Supply-fan [inlet vane position] [speed].**
10. **Return-fan on-off indication.**
11. **Return-air static-pressure indication.**
12. **Return-air static-pressure set point.**
13. **Return-fan airflow rate.**
14. **Return-fan [inlet vane position] [speed].**
15. **Building static-pressure indication.**
16. **Building static-pressure set point.**
17. **Preheat-coil air-temperature indication.**

18. **Preheat-coil air-temperature set point.**

19. **Preheat-coil pump operation indication.**

20. **Preheat-coil control-valve position.**

21. **Mixed-air-temperature indication.**

22. **Mixed-air-temperature set point.**

23. **Mixed-air damper position.**

24. **Relative humidity indication.**

25. **Relative humidity set point.**

26. **Relative humidity control-valve position.**

27. **Filter air-pressure-drop indication.**

28. **Filter low-air-pressure set point.**

29. **Filter high-air-pressure set point.**

30. **Fan-discharge air-temperature indication.**

31. **Fan-discharge air-temperature set point.**

32. **Heating-coil air-temperature indication.**

33. **Heating-coil air-temperature set point.**

34. **Heating-coil pump operation indication.**

35. **Heating-coil control-valve position.**

36. **Cooling-coil air-temperature indication.**

37. **Cooling-coil air-temperature set point.**

38. **Cooling-coil control-valve position.**

39. **Room temperature indication.**

40. **Room temperature set point.**

1.3 *TERMINAL UNIT OPERATING SEQUENCE*

A. Cabinet Unit Heater, Hydronic:

1. **Room Temperature:**

   a. ***Input Device: [Room thermostat] [Electronic temperature sensor].***

   b. ***Output Device: [Room thermostat] [DDC system binary output].***

   c. ***Action: Cycle fan to maintain temperature.***

2. **Low-Temperature Safety:**

   a. ***Input Device: Line-voltage, on-off thermostat, pipe mounted.***

   b. ***Output Device: Hard wired.***

   c. ***Action: Stop fan when [return heating-water] [condensate] temperature falls below 35 deg F.***

3. **Display:**

   a. ***Room temperature indication.***

   b. ***Room temperature set point.***

B. Cabinet Unit Heater, Electric: Room thermostat cycles fan and sequences stages of heating.

C. Unit Heater, Hydronic:

1. **Room Temperature:**

   a. ***Input Device: [Room thermostat] [Electronic temperature sensor].***

   b. ***Output Device: [Room thermostat] [DDC system binary output].***

c. ***Action: Cycle fan to maintain temperature.***

2. **Low-Temperature Safety:**

a. ***Input Device: Line-voltage, on-off thermostat, pipe mounted.***

b. ***Output Device: Hard wired.***

c. ***Action: Stop fan when [return heating-water] [condensate] temperature falls below 35 deg F.***

3. **Display:**

a. ***Room temperature indication.***

b. ***Room temperature set point.***

D. **Unit Heater, Electric: Room thermostat cycles fan and sequences stages of heating.**

E. **Combustion-Air Unit Heaters:**

1. **Room Temperature:**

a. ***Input Device: [Room thermostat] [Electronic temperature sensor].***

b. ***Output Device: Electronic control-valve operator.***

c. ***Action: Modulate valve to maintain temperature.***

2. **Display:**

a. ***Room temperature indication.***

b. ***Room temperature set point.***

c. ***Control-valve position.***

F. **Radiant Heating Cable, Electric: Room thermostat cycles power.**

G. **Radiant Heating Panel, Electric: Room thermostat cycles power.**

H. **Radiant Heating Panel, Hydronic:**

1. **Room Temperature:**

a. ***Input Device: [Room thermostat] [Electronic temperature sensor].***

b. ***Output Device: Electronic control-valve operator.***

c. ***Action: Modulate valve to maintain temperature.***

2. **Display:**

a. ***Room temperature indication.***

b. ***Room temperature set point.***

c. ***Control-valve position.***

I. **Two-Pipe, Single-Coil, Fan-Coil Unit:**

1. **Occupied Time Schedule:**

a. ***Input Device: [Fan switch] [Time clock] [DDC system time schedule].***

b. ***Output Device: [Time clock] [Binary output].***

c. ***Action: Start and stop fan and enable control.***

2. **Room Temperature:**

a. ***Input Device: [Room thermostat] [Electronic temperature sensor] in [room] [return air].***

b. ***Output Device: Electronic control-valve operator.***

c. ***Action: Modulate valve to maintain temperature.***

3. **DDC System Changeover:**

a. ***Input Device: [Thermostat] [Electronic temperature sensor] [in supply-water] [on supply-water piping] [DDC system].***

b. ***Output Device: [Hard-wired relay] [DDC system software].***

c. ***Action: Reverse control-valve action to switch from heating to cooling.***

4. **Display:**

a. ***DDC system graphic.***

b. ***DDC system on-off indication.***

c. ***DDC system occupied/unoccupied mode.***

d. ***Room temperature indication.***

e. ***Room temperature set point.***

f. ***Control-valve position.***

g. ***Supply-water temperature indication.***

J. **Four-Pipe, Hydronic Fan-Coil Unit:**

1. **Occupied Time Schedule:**

a. ***Input Device: [Fan switch] [Time clock] [DDC system time schedule].***

b. ***Output Device: [Time clock] [Binary output].***

c. ***Action: Start and stop fan, and enable control.***

2. **Room Temperature:**

a. ***Input Device: [Room thermostat] [Electronic temperature sensor].***

b. ***Output Device: Electronic control-valve operators.***

c. ***Action: Modulate multiport control valves to maintain temperature.***

3. **Display:**

a. ***DDC system graphic.***

b. ***DDC system on-off indication.***

c. ***DDC system occupied/unoccupied mode.***

d. ***Room temperature indication.***

e. ***Room temperature set point.***

f. ***Control-valve position.***

K. **Unit Ventilator: Room thermostat modulates heating-and-cooling control valves; airstream thermostats modulate outdoor- and return-air dampers as follows:**

1. **Occupied Time Schedule:**

a. ***Input Device: [Fan switch] [Time clock] [DDC system time schedule].***

b. ***Output Device: [Time clock] [Binary output].***

c. ***Action: Start and stop fan, move outdoor- and return-air dampers to [minimum] [maximum] outdoor-air position, and enable control.***

2. **Room Temperature - Valves:**

a. ***Input Device: [Room thermostat] [Electronic temperature sensor].***

b. ***Output Device: Electronic control-valve operators.***

c. ***Action: Modulate heating-water supply control valve and chilled-water supply control valve in sequence to maintain temperature.***

3. **Room Temperature - Dampers:**

   a. ***Input Device: [Thermostat] [Electronic temperature sensor] in mixed air.***

   b. ***Output Device: Electronic control damper actuators.***

   c. ***Action: Modulate outdoor- and return-air dampers to maintain temperature.***

4. **Supply-Air Temperature Limit:**

   a. ***Input Device: [Thermostat] [Electronic temperature sensor] in discharge air.***

   b. ***Output Device: Electronic control-valve operators and control damper actuators.***

   c. ***Action: Override room thermostat to control valves and dampers to prevent discharge air from dropping below a minimum set point.***

5. **Warm-up Cycle:**

   a. ***Input Device: [Time clock] [DDC system time schedule].***

   b. ***Output Device: [Hard-wired relay] [DDC system binary output].***

   c. ***Action: Open heating-water supply control valve, close outdoor-air damper, and open return-air damper.***

6. **Display:**

   a. ***DDC system graphic.***

   b. ***DDC system on-off indication.***

   c. ***DDC system occupied/unoccupied mode.***

   d. ***Room temperature indication.***

   e. ***Room temperature set point.***

f. ***Control-valve position.***

g. ***Damper position.***

L. **Heating Coils, Hydronic:**

1. **Room Temperature:**

a. ***Input Device: [Room thermostat] [Electronic temperature sensor].***

b. ***Output Device: [Electronic] [Electric] control-valve operators.***

c. ***Action: [Modulate] [Cycle] valve to maintain temperature.***

2. **Display:**

a. ***Room temperature indication.***

b. ***Room temperature set point.***

c. ***Control-valve position.***

M. **Heating Coils, Electric: Room thermostat [cycles coils] [sequences stages of heating].**

N. **Radiators and Convectors, Hydronic:**

1. **Occupancy:**

a. ***Input Device: Occupancy sensor.***

b. ***Output Device: DDC system binary output.***

c. ***Action: Report occupancy and enable occupied temperature set point.***

2. **Room Temperature:**

a. ***Input Device: [Room thermostat] [Electronic temperature sensor].***

b. ***Output Device: [Electronic] [Electric] control-valve operators.***

c. ***Action: [Modulate] [Cycle] valve to maintain temperature.***

1) Occupied Temperature: 75 deg F.
2) Unoccupied Temperature: 65 deg F.

3. **Display:**

a. ***Room/area served.***

b. ***Room temperature indication.***

c. ***Room temperature set point.***

d. ***Room temperature set point, occupied.***

e. ***Room temperature set point, occupied standby.***

f. ***Room temperature set point, unoccupied.***

g. ***Control-valve position as percent open.***

O. **Radiators and Convectors, Electric: Room thermostat [cycles coils] [sequences stages of heating].**

P. **Constant-Volume, Terminal Air Units, Hydronic:**

1. **Occupancy:**

a. ***Input Device: Occupancy sensor.***

b. ***Output Device: DDC system binary output.***

c. ***Action: Report occupancy and enable occupied temperature set point.***

1) Occupied Temperature: 75 deg F.
2) Unoccupied Temperature: 65 deg F.

2. **Room Temperature:**

a. ***Input Device: [Room thermostat] [Electronic temperature sensor].***

b. ***Output Device: [Electronic] [Electric] control-valve operators.***

c. ***Action: [Modulate] [Cycle] valve to maintain temperature.***

3. **Display:**

a. ***Room/area served.***

b. ***Room occupied/unoccupied.***

c. ***Room temperature indication.***

d. ***Room temperature set point.***

e. ***Room temperature set point, occupied.***

f. ***Room temperature set point, unoccupied.***

g. ***Control-valve position as percent open.***

Q. **VAV, Terminal Air Units with Hydronic Coils:**

1. **Occupancy:**

a. ***Input Device: Occupancy sensor.***

b. ***Output Device: DDC system binary output.***

c. ***Action: Report occupancy and enable occupied temperature set point.***

1) Occupied Temperature: 75 deg F.
2) Unoccupied Temperature: 65 deg F.

2. **Room Temperature:**

a. ***Input Device: [Room thermostat] [Electronic temperature sensor].***

b. ***Output Device: Electronic damper actuators and control-valve operators.***

c. ***Action: Modulate damper and valve to maintain temperature.***

1) Sequence damper from full open to minimum position, then valve from closed to fully open.

3. **Display:**

a. ***Room/area served.***

b. ***Room occupied/unoccupied.***

c. ***Room temperature indication.***

d. ***Room temperature set point.***

e. ***Room temperature set point, occupied.***

f. ***Room temperature set point, unoccupied.***

g. ***Air-damper position as percent open.***

h. ***Control-valve position as percent open.***

1.4 *VENTILATION SEQUENCES*

A. **Combustion-Air, Makeup Unit Control, Electric: Start fan when served appliance burner starts; room thermostat sequences stages of heating.**

B. **Combustion-Air, Makeup Unit Control, Hydronic: Start fan when served appliance burner starts; room thermostat [cycles] [modulates] control valve.**

C. **Gravity Roof Ventilator: [Occupancy sensor] [Room thermostat] opens dampers.**

D. **Exhaust Fan: [Occupancy sensor] [Interlock with light switch] [Room thermostat] cycles fan.**

E. **Kitchen Exhaust Fan: Occupancy sensor starts fan and energizes makeup air unit.**

PART 2 - PRODUCTS (Not Applicable)

PART 3 - EXECUTION (Not Applicable)

END OF SECTION 230993

SECTION 232113 - HYDRONIC PIPING

PART 1 - GENERAL

1.1 *SUMMARY*

A. **This Section includes pipe and fitting materials, joining methods, special-duty valves, and specialties for the following:**

1. **Hot-water heating piping.**
2. **Chilled-water piping.**
3. **Condenser-water piping.**
4. **Makeup-water piping.**
5. **Condensate-drain piping.**
6. **Blowdown-drain piping.**
7. **Air-vent piping.**
8. **Safety-valve-inlet and -outlet piping.**

B. **See Division 23 Section "Hydronic Pumps" for pumps, motors, and accessories for hydronic piping.**

1.2 *PERFORMANCE REQUIREMENTS*

A. **Hydronic piping components and installation shall be capable of withstanding the following minimum working pressure and temperature:**

1. **Hot-Water Heating Piping: <Insert** psig**> at [**200 deg F**] <Insert temperature>.**
2. **Chilled-Water Piping: <Insert** psig**> at [**200 deg F**] <Insert temperature>.**

3. **Condenser-Water Piping: <Insert** psig**> at [**150 deg F**] <Insert temperature>.**

4. **Makeup-Water Piping: [**80 psig**] <Insert pressure> at [**150 deg F**] <Insert temperature>.**

5. **Condensate-Drain Piping: [**150 deg F**] <Insert temperature>.**

6. **Blowdown-Drain Piping: [**200 deg F**] <Insert temperature>.**

7. **Air-Vent Piping: [**200 deg F**] <Insert temperature>.**

8. **Safety-Valve-Inlet and -Outlet Piping: Equal to the pressure of the piping system to which it is attached.**

1.3 *SUBMITTALS*

A. **Product Data: For each type of the following:**

1. **Plastic pipe and fittings with solvent cement.**

2. **Pressure-seal fittings.**

3. **Valves. Include flow and pressure drop curves based on manufacturer's testing for calibrated-orifice balancing valves and automatic flow-control valves.**

4. **Air control devices.**

5. **Chemical treatment.**

6. **Hydronic specialties.**

B. **LEED Submittal:**

1. **Product Data for Credit EQ 4.1: For solvent cements and adhesive primers, including printed statement of VOC content.**

C. **Shop Drawings: Detail, at [**1/4**] <Insert scale> scale, the piping layout, fabrication of pipe anchors, hangers, supports for multiple pipes, alignment guides, expansion joints and loops, and attach-**

ments of the same to the building structure. Detail location of anchors, alignment guides, and expansion joints and loops.

D. **Field quality-control test reports.**

E. **Operation and maintenance data.**

1.4 *QUALITY ASSURANCE*

A. **ASME Compliance: Comply with ASME B31.9, "Building Services Piping," for materials, products, and installation. Safety valves and pressure vessels shall bear the appropriate ASME label. Fabricate and stamp air separators and expansion tanks to comply with ASME Boiler and Pressure Vessel Code: Section VIII, Division 1.**

PART 2 - PRODUCTS

2.1 *COPPER TUBE AND FITTINGS*

A. **Drawn-Temper Copper Tubing: [**ASTM B 88, Type L**] [**ASTM B 88, Type M**].**

B. **Annealed-Temper Copper Tubing: ASTM B 88, Type K.**

C. **DWV Copper Tubing: ASTM B 306, Type DWV.**

D. **Wrought-Copper Fittings: ASME B16.22.**

1. **Available Manufacturers: Subject to compliance with requirements, manufacturers offering products that may be incorporated into the Work include, but are not limited to, the following:**

2. **Manufacturers: Subject to compliance with requirements, provide products by one of the following:**

3. **Basis-of-Design Product: Subject to compliance with requirements, provide [the product indicated on Drawings] <Insert manufacturer's name; product name or designation> or a comparable product by one of the following:**

   a. ***Anvil International, Inc.***

b. ***S. P. Fittings; a division of Star Pipe Products.***

c. ***Victaulic Company of America.***

d. ***<Insert manufacturer's name.>***

4. **Grooved-End Copper Fittings: ASTM B 75, copper tube or ASTM B 584, bronze casting.**

5. **Grooved-End-Tube Couplings: Rigid pattern, unless otherwise indicated; gasketed fitting. Ductile-iron housing with keys matching pipe and fitting grooves,[prelubricated] EPDM gasket rated for minimum 230 deg F for use with housing, and steel bolts and nuts.**

E. **Wrought-Copper Unions: ASME B16.22.**

2.2 *STEEL PIPE AND FITTINGS*

A. **Steel Pipe: ASTM A 53/A 53M, black steel with plain ends; type, grade, and wall thickness as indicated in Part 3 "Piping Applications" Article.**

B. **Cast-Iron Threaded Fittings: ASME B16.4; Classes 125 and 250 as indicated in Part 3 "Piping Applications" Article.**

C. **Malleable-Iron Threaded Fittings: ASME B16.3, Classes 150 and 300 as indicated in Part 3 "Piping Applications" Article.**

D. **Malleable-Iron Unions: ASME B16.39; Classes 150, 250, and 300 as indicated in Part 3 "Piping Applications" Article.**

E. **Cast-Iron Pipe Flanges and Flanged Fittings: ASME B16.1, Classes 25, 125, and 250; raised ground face, and bolt holes spot faced as indicated in Part 3 "Piping Applications" Article.**

F. **Wrought Cast- and Forged-Steel Flanges and Flanged Fittings: ASME B16.5, including bolts, nuts, and gaskets of the following material group, end connections, and facings:**

1. **Material Group: 1.1.**

2. **End Connections: Butt welding.**

3. **Facings: Raised face.**

G. **Grooved Mechanical-Joint Fittings and Couplings:**

1. **Available Manufacturers: Subject to compliance with requirements, manufacturers offering products that may be incorporated into the Work include, but are not limited to, the following:**

2. **Manufacturers: Subject to compliance with requirements, provide products by one of the following:**

3. **Basis-of-Design Product: Subject to compliance with requirements, provide [the product indicated on Drawings] <Insert manufacturer's name; product name or designation> or a comparable product by one of the following:**

   a. ***Anvil International, Inc.***

   b. ***Central Sprinkler Company; a division of Tyco Fire & Building Products.***

   c. ***National Fittings, Inc.***

   d. ***S. P. Fittings; a division of Star Pipe Products.***

   e. ***Victaulic Company of America.***

   f. ***<Insert manufacturer's name.>***

4. **Joint Fittings: ASTM A 536, Grade 65-45-12 ductile iron; ASTM A 47/A 47M, Grade 32510 malleable iron; ASTM A 53/A 53M, Type F, E, or S, Grade B fabricated steel; or ASTM A 106, Grade B steel fittings with grooves or shoulders constructed to accept grooved-end couplings; with nuts, bolts, locking pin, locking toggle, or lugs to secure grooved pipe and fittings.**

5. **Couplings: Ductile- or malleable-iron housing and synthetic rubber gasket of central cavity pressure-responsive design; with nuts,**

bolts, locking pin, locking toggle, or lugs to secure grooved pipe and fittings.

2.3 *PLASTIC PIPE AND FITTINGS*

A. **CPVC Plastic Pipe: ASTM F 441/F 441M, Schedules 40 and 80, plain ends as indicated in Part 3 "Piping Applications" Article.**

B. **CPVC Plastic Pipe Fittings: Socket-type pipe fittings, ASTM F 438 for Schedule 40 pipe; ASTM F 439 for Schedule 80 pipe.**

C. **PVC Plastic Pipe: ASTM D 1785, Schedules 40 and 80, plain ends as indicated in Part 3 "Piping Applications" Article.**

D. **PVC Plastic Pipe Fittings: Socket-type pipe fittings, ASTM D 2466 for Schedule 40 pipe; ASTM D 2467 for Schedule 80 pipe.**

2.4 *JOINING MATERIALS*

A. **Pipe-Flange Gasket Materials: Suitable for chemical and thermal conditions of piping system contents.**

1. **ASME B16.21, nonmetallic, flat, asbestos free, 1/8-inch maximum thickness unless thickness or specific material is indicated.**

a. ***Full-Face Type: For flat-face, Class 125, cast-iron and cast-bronze flanges.***

b. ***Narrow-Face Type: For raised-face, Class 250, cast-iron and steel flanges.***

B. **Flange Bolts and Nuts: ASME B18.2.1, carbon steel, unless otherwise indicated.**

C. **Plastic, Pipe-Flange Gasket, Bolts, and Nuts: Type and material recommended by piping system manufacturer, unless otherwise indicated.**

D. **Solder Filler Metals: ASTM B 32, lead-free alloys. Include water-flushable flux according to ASTM B 813.**

E. **Brazing Filler Metals: AWS A5.8, BCuP Series, copper-phosphorus alloys for joining copper with copper; or BAg-1, silver alloy for joining copper with bronze or steel.**

F. **Solvent Cements for Joining Plastic Piping:**

1. **CPVC Piping: ASTM F 493.**

   a. ***Use CPVC solvent cement that has a VOC content of 490 g/L or less when calculated according to 40 CFR 59, Subpart D (EPA Method 24).***

   b. ***Use adhesive primer that has a VOC content of 550 g/L or less when calculated according to 40 CFR 59, Subpart D (EPA Method 24).***

2. **PVC Piping: ASTM D 2564. Include primer according to ASTM F 656.**

   a. ***Use PVC solvent cement that has a VOC content of 510 g/L or less when calculated according to 40 CFR 59, Subpart D (EPA Method 24).***

   b. ***Use adhesive primer that has a VOC content of 550 g/L or less when calculated according to 40 CFR 59, Subpart D (EPA Method 24).***

G. **Gasket Material: Thickness, material, and type suitable for fluid to be handled and working temperatures and pressures.**

2.5 *TRANSITION FITTINGS*

A. **Plastic-to-Metal Transition Fittings:**

1. **Available Manufacturers: Subject to compliance with requirements, manufacturers offering products that may be incorporated into the Work include, but are not limited to, the following:**

2. **Manufacturers: Subject to compliance with requirements, provide products by one of the following:**

   a. ***Charlotte Pipe and Foundry Company.***

   b. ***IPEX Inc.***

c. ***KBi.***

d. ***<Insert manufacturer's name.>***

3. **[CPVC] [PVC] [CPVC and PVC] one-piece fitting with one threaded brass or copper insert and one Schedule 80 solvent-cement-joint end.**

B. **Plastic-to-Metal Transition Unions:**

1. **Available Manufacturers: Subject to compliance with requirements, manufacturers offering products that may be incorporated into the Work include, but are not limited to, the following:**

2. **Manufacturers: Subject to compliance with requirements, provide products by one of the following:**

a. ***Charlotte Pipe and Foundry Company.***

b. ***IPEX Inc.***

c. ***KBi.***

d. ***NIBCO INC.***

e. ***<Insert manufacturer's name.>***

3. **MSS SP-107, [CPVC] [PVC] [CPVC and PVC] union. Include brass or copper end, Schedule 80 solvent-cement-joint end, rubber gasket, and threaded union.**

2.6 *DIELECTRIC FITTINGS*

A. **Description: Combination fitting of copper-alloy and ferrous materials with threaded, solder-joint, plain, or weld-neck end connections that match piping system materials.**

B. **Insulating Material: Suitable for system fluid, pressure, and temperature.**

C. **Dielectric Unions:**

1. **Available Manufacturers: Subject to compliance with requirements, manufacturers offering products that may be incorporated into the Work include, but are not limited to, the following:**

2. **Manufacturers: Subject to compliance with requirements, provide products by one of the following:**

   a. ***Capitol Manufacturing Company.***

   b. ***Central Plastics Company.***

   c. ***Hart Industries International, Inc.***

   d. ***Watts Regulator Co.; a division of Watts Water Technologies, Inc.***

   e. ***Zurn Plumbing Products Group; AquaSpec Commercial Products Division.***

   f. ***<Insert manufacturer's name.>***

3. **Factory-fabricated union assembly, for 250-psig minimum working pressure at 180 deg F.**

D. **Dielectric Couplings:**

1. **Available Manufacturers: Subject to compliance with requirements, manufacturers offering products that may be incorporated into the Work include, but are not limited to, the following:**

2. **Manufacturers: Subject to compliance with requirements, provide products by one of the following:**

   a. ***Calpico, Inc.***

   b. ***Lochinvar Corporation.***

   c. ***<Insert manufacturer's name.>***

3. **Galvanized-steel coupling with inert and noncorrosive thermoplastic lining; threaded ends; and 300-psig minimum working pressure at 225 deg F.**

2.7 *VALVES*

A. **Gate, Globe, Check, Ball, and Butterfly Valves: Comply with requirements specified in Division 23 Section "General-Duty Valves for HVAC Piping."**

B. **Automatic Temperature-Control Valves, Actuators, and Sensors: Comply with requirements specified in Division 23 Section "Instrumentation and Control for HVAC."**

C. **Bronze, Calibrated-Orifice, Balancing Valves:**

1. **Available Manufacturers: Subject to compliance with requirements, manufacturers offering products that may be incorporated into the Work include, but are not limited to, the following:**

2. **Manufacturers: Subject to compliance with requirements, provide products by one of the following:**

3. **Basis-of-Design Product: Subject to compliance with requirements, provide [the product indicated on Drawings] <Insert manufacturer's name; product name or designation> or a comparable product by one of the following:**

   a. ***Armstrong Pumps, Inc.***

   b. ***Bell & Gossett Domestic Pump; a division of ITT Industries.***

   c. ***Flow Design Inc.***

   d. ***Gerand Engineering Co.***

   e. ***Griswold Controls.***

   f. ***Taco.***

   g. ***Tour & Andersson; available through Victaulic Company of America***

   h. ***<Insert manufacturer's name.>***

4. **Body: Bronze, ball or plug type with calibrated orifice or venturi.**

5. **Ball: Brass or stainless steel.**

6. **Plug: Resin.**

7. **Seat: PTFE.**

8. **End Connections: Threaded or socket.**

9. **Pressure Gage Connections: Integral seals for portable differential pressure meter.**

10. **Handle Style: Lever, with memory stop to retain set position.**

11. **CWP Rating: Minimum 125 psig.**

12. **Maximum Operating Temperature: 250 deg F.**

D. **Cast-Iron or Steel, Calibrated-Orifice, Balancing Valves:**

1. **Available Manufacturers: Subject to compliance with requirements, manufacturers offering products that may be incorporated into the Work include, but are not limited to, the following:**

2. **Manufacturers: Subject to compliance with requirements, provide products by one of the following:**

3. **Basis-of-Design Product: Subject to compliance with requirements, provide [the product indicated on Drawings] <Insert manufacturer's name; product name or designation> or a comparable product by one of the following:**

   a. ***Armstrong Pumps, Inc.***

   b. ***Bell & Gossett Domestic Pump; a division of ITT Industries.***

   c. ***Flow Design Inc.***

   d. ***Gerand Engineering Co.***

   e. ***Griswold Controls.***

f. ***Taco.***

g. ***<Insert manufacturer's name.>***

4. **Body: Cast-iron or steel body, ball, plug, or globe pattern with calibrated orifice or venturi.**

5. **Ball: Brass or stainless steel.**

6. **Stem Seals: EPDM O-rings.**

7. **Disc: Glass and carbon-filled PTFE.**

8. **Seat: PTFE.**

9. **End Connections: Flanged or grooved.**

10. **Pressure Gage Connections: Integral seals for portable differential pressure meter.**

11. **Handle Style: Lever, with memory stop to retain set position.**

12. **CWP Rating: Minimum 125 psig.**

13. **Maximum Operating Temperature: 250 deg F.**

E. **Diaphragm-Operated, Pressure-Reducing Valves:**

1. **Available Manufacturers: Subject to compliance with requirements, manufacturers offering products that may be incorporated into the Work include, but are not limited to, the following:**

2. **Manufacturers: Subject to compliance with requirements, provide products by one of the following:**

3. **Basis-of-Design Product: Subject to compliance with requirements, provide [the product indicated on Drawings] <Insert manufacturer's name; product name or designation> or a comparable product by one of the following:**

a. ***Amtrol, Inc.***

b. ***Armstrong Pumps, Inc.***

c. ***Bell & Gossett Domestic Pump; a division of ITT Industries.***

d. ***Conbraco Industries, Inc.***

e. ***Spence Engineering Company, Inc.***

f. ***Watts Regulator Co.; a division of Watts Water Technologies, Inc.***

g. ***<Insert manufacturer's name.>***

4. **Body: Bronze or brass.**

5. **Disc: Glass and carbon-filled PTFE.**

6. **Seat: Brass.**

7. **Stem Seals: EPDM O-rings.**

8. **Diaphragm: EPT.**

9. **Low inlet-pressure check valve.**

10. **Inlet Strainer: <Insert materials>, removable without system shutdown.**

11. **Valve Seat and Stem: Noncorrosive.**

12. **Valve Size, Capacity, and Operating Pressure: Selected to suit system in which installed, with operating pressure and capacity factory set and field adjustable.**

F. **Diaphragm-Operated Safety Valves:**

1. **Available Manufacturers: Subject to compliance with requirements, manufacturers offering products that may be incorporated into the Work include, but are not limited to, the following:**

2. **Manufacturers: Subject to compliance with requirements, provide products by one of the following:**

3. **Basis-of-Design Product: Subject to compliance with requirements, provide [the product indicated on Drawings] <Insert manufacturer's name; product name or designation> or a comparable product by one of the following:**

   a. ***Amtrol, Inc.***

   b. ***Armstrong Pumps, Inc.***

   c. ***Bell & Gossett Domestic Pump; a division of ITT Industries.***

   d. ***Conbraco Industries, Inc.***

   e. ***Spence Engineering Company, Inc.***

   f. ***Watts Regulator Co.; a division of Watts Water Technologies, Inc.***

   g. ***<Insert manufacturer's name.>***

4. **Body: Bronze or brass.**

5. **Disc: Glass and carbon-filled PTFE.**

6. **Seat: Brass.**

7. **Stem Seals: EPDM O-rings.**

8. **Diaphragm: EPT.**

9. **Wetted, Internal Work Parts: Brass and rubber.**

10. **Inlet Strainer: <Insert materials>, removable without system shutdown.**

11. **Valve Seat and Stem: Noncorrosive.**

12. **Valve Size, Capacity, and Operating Pressure: Comply with ASME Boiler and Pressure Vessel Code: Section IV, and selected to suit system in which installed, with operating pressure and capacity factory set and field adjustable.**

G. **Automatic Flow-Control Valves:**

1. **Available Manufacturers: Subject to compliance with requirements, manufacturers offering products that may be incorporated into the Work include, but are not limited to, the following:**

2. **Manufacturers: Subject to compliance with requirements, provide products by one of the following:**

3. **Basis-of-Design Product: Subject to compliance with requirements, provide [the product indicated on Drawings] <Insert manufacturer's name; product name or designation> or a comparable product by one of the following:**

   a. ***Flow Design Inc.***

   b. ***Griswold Controls.***

   c. ***<Insert manufacturer's name.>***

4. **Body: Brass or ferrous metal.**

5. **Piston and Spring Assembly: [Stainless steel] [Corrosion resistant], tamper proof, self cleaning, and removable.**

6. **Combination Assemblies: Include bonze or brass-alloy ball valve.**

7. **Identification Tag: Marked with zone identification, valve number, and flow rate.**

8. **Size: Same as pipe in which installed.**

9. **Performance: Maintain constant flow, plus or minus 5 percent over system pressure fluctuations.**

10. **Minimum CWP Rating: [**175 psig**] [**300 psig**].**

11. **Maximum Operating Temperature: [**200 deg F**] [**250 deg F**].**

2.8 *AIR CONTROL DEVICES*

A. **Available Manufacturers: Subject to compliance with requirements, manufacturers offering products that may be incorporated into the Work include, but are not limited to, the following:**

B. **Manufacturers: Subject to compliance with requirements, provide products by one of the following:**

1. **Amtrol, Inc.**

2. **Armstrong Pumps, Inc.**

3. **Bell & Gossett Domestic Pump; a division of ITT Industries.**

4. **Taco.**

5. **<Insert manufacturer's name.>**

C. **Manual Air Vents:**

1. **Body: Bronze.**

2. **Internal Parts: Nonferrous.**

3. **Operator: Screwdriver or thumbscrew.**

4. **Inlet Connection: NPS 1/2.**

5. **Discharge Connection: NPS 1/8.**

6. **CWP Rating: 150 psig.**

7. **Maximum Operating Temperature: 225 deg F.**

D. **Expansion Tanks:**

1. **Tank: Welded steel, rated for 125-psig working pressure and 375 deg F maximum operating temperature, with taps in bottom of tank for tank fitting and taps in end of tank for gage glass. Tanks shall be factory tested with taps fabricated and labeled according to ASME Boiler and Pressure Vessel Code: Section VIII, Division 1.**

2. **Air-Control Tank Fitting: Cast-iron body, copper-plated tube, brass vent tube plug, and stainless-steel ball check, 100-gal. unit only; sized for compression-tank diameter. Provide tank fittings for 125-psig working pressure and 250 deg F maximum operating temperature.**

3. **Tank Drain Fitting: Brass body, nonferrous internal parts; 125-psig working pressure and 240 deg F maximum operating temperature; constructed to admit air to compression tank, drain water, and close off system.**

4. **Gage Glass: Full height with dual manual shutoff valves, [**3/4-inch-**] <Insert dimension> diameter gage glass, and slotted-metal glass guard.**

E. **In-Line Air Separators:**

1. **Tank: One-piece cast iron with an integral weir constructed to decelerate system flow to maximize air separation.**

2. **Maximum Working Pressure: Up to 175 psig.**

3. **Maximum Operating Temperature: Up to 300 deg F.**

2.9 *CHEMICAL TREATMENT*

A. **Bypass Chemical Feeder: Welded steel construction; 125-psig working pressure; 5-gal. capacity; with fill funnel and inlet, outlet, and drain valves.**

1. **Chemicals: Specially formulated, based on analysis of makeup water, to prevent accumulation of scale and corrosion in piping and connected equipment.**

B. **Ethylene and Propylene Glycol: Industrial grade with corrosion inhibitors and environmental-stabilizer additives for mixing with water in systems indicated to contain antifreeze or glycol solutions.**

2.10 *HYDRONIC PIPING SPECIALTIES*

A. **Y-Pattern Strainers:**

1. **Body: ASTM A 126, Class B, cast iron with bolted cover and bottom drain connection.**

2. **End Connections: Threaded ends for NPS 2 and smaller; flanged ends for NPS 2-1/2 and larger.**

3. **Strainer Screen: [40] [60]-mesh startup strainer, and perforated stainless-steel basket with 50 percent free area.**

4. **CWP Rating: 125 psig.**

B. **Stainless-Steel Bellow, Flexible Connectors:**

1. **Body: Stainless-steel bellows with woven, flexible, bronze, wire-reinforcing protective jacket.**

2. **End Connections: Threaded or flanged to match equipment connected.**

3. **Performance: Capable of 3/4-inch misalignment.**

4. **CWP Rating: 150 psig.**

5. **Maximum Operating Temperature: 250 deg F.**

C. **Expansion fittings are specified in Division 23 Section "Expansion Fittings and Loops for HVAC Piping."**

PART 3 - EXECUTION

3.1 *PIPING APPLICATIONS*

A. **Hot-water heating piping, aboveground, [**NPS 2 **and smaller,] <Insert pipe size range> shall be[any of] the following:**

1. **Type [**L**] [**M**], drawn-temper copper tubing, wrought-copper fittings, and [soldered] [brazed] [pressure-seal] joints.**

2. **Schedule [40] [30] [20] steel pipe; Class [125, cast-iron] [150, malleable-iron] [250, cast-iron] [300, malleable-iron] fittings; cast-iron flanges and flange fittings; and threaded joints.**

3. **Schedule [40] [80] CPVC plastic pipe and fittings and solvent-welded joints.**

B. **Hot-water heating piping, aboveground, [**NPS 2-1/2 **and larger,] <Insert pipe size range> shall be[any of] the following:**

1. **Type [**L**] [**M**], drawn-temper copper tubing, wrought-copper fittings, and [soldered] [brazed] joints.**

2. **Schedule [40] [30] [20] steel pipe, wrought-steel fittings and wrought-cast or forged-steel flanges and flange fittings, and welded and flanged joints.**

3. **Schedule [40] [30] [20] steel pipe; grooved, mechanical joint coupling and fittings; and grooved, mechanical joints.**

4. **Schedule [40] [80] CPVC plastic pipe and fittings and solvent-welded joints.**

C. **Hot-Water Heating Piping Installed Belowground and within Slabs: Type K, annealed-temper copper tubing, wrought-copper fittings, and [soldered] [brazed] joints. Use the fewest possible joints.**

D. **Chilled-water piping, aboveground, [**NPS 2 **and smaller,] <Insert pipe size range> shall be[any of] the following:**

1. **Type [**L**] [**M**], drawn-temper copper tubing, wrought-copper fittings, and [soldered] [brazed] [pressure-seal] joints.**

2. **Schedule [40] [30] [20] steel pipe; Class [125, cast-iron] [150, malleable-iron] [250, cast-iron] [300, malleable-iron] fittings; cast-iron flanges and flange fittings; and threaded joints.**

3. **Schedule [40] [80] CPVC plastic pipe and fittings and solvent-welded joints.**

E. **Chilled-water piping, aboveground, [**NPS 2-1/2 **and larger,] <Insert pipe size range> shall be[any of] the following:**

1. **Type [**L**] [**M**], drawn-temper copper tubing, wrought-copper fittings, and [soldered] [brazed] joints.**

2. **Schedule [40] [30] [20] steel pipe, wrought-steel fittings and wrought-cast or forged-steel flanges and flange fittings, and welded and flanged joints.**

3. **Schedule [40] [30] [20] steel pipe; grooved, mechanical joint coupling and fittings; and grooved, mechanical joints.**

4. **Schedule [40] [80] CPVC plastic pipe and fittings and solvent-welded joints.**

F. **Chilled-Water Piping Installed Belowground and within Slabs: Type K, annealed-temper copper tubing, wrought-copper fittings, and [soldered] [brazed] joints. Use the fewest possible joints.**

G. **Condenser-water piping, aboveground, [**NPS 2 **and smaller,] <Insert pipe size range> shall be[any of] the following:**

1. **Type [**L**] [**M**], drawn-temper copper tubing, wrought-copper fittings, and [soldered] [brazed] [pressure-seal] joints.**

2. **Schedule [80] [40] [30] [20] steel pipe; Class [125, cast-iron] [150, malleable-iron] [250, cast-iron] [300, malleable-iron] fittings; cast-iron flanges and flange fittings; and threaded joints.**

3. **Schedule [40] [80] CPVC plastic pipe and fittings and solvent-welded joints.**

H. **Condenser-water piping, aboveground, [**NPS 2-1/2 **and larger,] <Insert pipe size range> shall be[any of] the following:**

1. **Type [**L**] [**M**], drawn-temper copper tubing, wrought-copper fittings, and [soldered] [brazed] joints.**

2. **Schedule [80] [40] [30] [20] steel pipe, wrought-steel fittings and wrought-cast or forged-steel flanges and flange fittings, and welded and flanged joints.**

3. **Schedule [80] [40] [30] [20] steel pipe; grooved, mechanical joint coupling and fittings; and grooved, mechanical joints.**

4. **Schedule [40] [80] CPVC plastic pipe and fittings and solvent-welded joints.**

I. **Condenser-Water Piping Installed Belowground and within Slabs: Type K, annealed-temper copper tubing, wrought-copper fittings, and [soldered] [brazed] joints. Use the fewest possible joints.**

J. **Makeup-water piping installed aboveground shall be[either of] the following:**

1. **Type [L] [M], drawn-temper copper tubing, wrought-copper fittings, and [soldered] [brazed] joints.**

2. **Schedule [40] [80] CPVC plastic pipe and fittings, and solvent-welded joints.**

K. **Makeup-Water Piping Installed Belowground and within Slabs: Type K, annealed-temper copper tubing, wrought-copper fittings, and soldered joints. Use the fewest possible joints.**

L. **Condensate-Drain Piping: Type [M] [DWV], drawn-temper copper tubing, wrought-copper fittings, and soldered joints[or Schedule 40 PVC plastic pipe and fittings and solvent-welded joints].**

M. **Condensate-Drain Piping: Schedule 40 PVC plastic pipe and fittings and solvent-welded joints.**

N. **Blowdown-Drain Piping: Same materials and joining methods as for piping specified for the service in which blowdown drain is installed.**

O. **Air-Vent Piping:**

1. **Inlet: Same as service where installed with metal-to-plastic transition fittings for plastic piping systems according to the piping manufacturer's written instructions.**

2. **Outlet: Type K, annealed-temper copper tubing with soldered or flared joints.**

P. **Safety-Valve-Inlet and -Outlet Piping for Hot-Water Piping: Same materials and joining methods as for piping specified for the service in which safety valve is installed with metal-to-plastic transition fit-**

tings for plastic piping systems according to the piping manufacturer's written instructions.

3.2 *VALVE APPLICATIONS*

A. **Install shutoff-duty valves at each branch connection to supply mains, and at supply connection to each piece of equipment.**

B. **Install [throttling-duty] [calibrated-orifice, balancing] valves at each branch connection to return main.**

C. **Install calibrated-orifice, balancing valves in the return pipe of each heating or cooling terminal.**

D. **Install check valves at each pump discharge and elsewhere as required to control flow direction.**

E. **Install safety valves at hot-water generators and elsewhere as required by ASME Boiler and Pressure Vessel Code. Install drip-pan elbow on safety-valve outlet and pipe without valves to the outdoors; and pipe drain to nearest floor drain or as indicated on Drawings. Comply with ASME Boiler and Pressure Vessel Code: Section VIII, Division 1, for installation requirements.**

F. **Install pressure-reducing valves at makeup-water connection to regulate system fill pressure.**

3.3 *PIPING INSTALLATIONS*

A. **Drawing plans, schematics, and diagrams indicate general location and arrangement of piping systems. Indicate piping locations and arrangements if such were used to size pipe and calculate friction loss, expansion, pump sizing, and other design considerations. Install piping as indicated unless deviations to layout are approved on Coordination Drawings.**

B. **Install piping in concealed locations, unless otherwise indicated and except in equipment rooms and service areas.**

C. **Install piping indicated to be exposed and piping in equipment rooms and service areas at right angles or parallel to building walls. Diagonal runs are prohibited unless specifically indicated otherwise.**

D. **Install piping above accessible ceilings to allow sufficient space for ceiling panel removal.**

E. **Install piping to permit valve servicing.**

F. **Install piping at indicated slopes.**

G. **Install piping free of sags and bends.**

H. **Install fittings for changes in direction and branch connections.**

I. **Install piping to allow application of insulation.**

J. **Select system components with pressure rating equal to or greater than system operating pressure.**

K. **Install groups of pipes parallel to each other, spaced to permit applying insulation and servicing of valves.**

L. **Install drains, consisting of a tee fitting, NPS 3/4 ball valve, and short NPS 3/4 threaded nipple with cap, at low points in piping system mains and elsewhere as required for system drainage.**

M. **Install piping at a uniform grade of 0.2 percent upward in direction of flow.**

N. **Reduce pipe sizes using eccentric reducer fitting installed with level side up.**

O. **Install branch connections to mains using [mechanically formed] tee fittings in main pipe, with the branch connected to the bottom of the main pipe. For up-feed risers, connect the branch to the top of the main pipe.**

P. **Install valves according to Division 23 Section "General-Duty Valves for HVAC Piping."**

Q. **Install unions in piping, NPS 2 and smaller, adjacent to valves, at final connections of equipment, and elsewhere as indicated.**

R. **Install flanges in piping, NPS 2-1/2 and larger, at final connections of equipment and elsewhere as indicated.**

S. **Install strainers on inlet side of each control valve, pressure-reducing valve, solenoid valve, in-line pump, and elsewhere as indicated. Install NPS 3/4 nipple and ball valve in blowdown connection of strainers NPS 2 and larger. Match size of strainer blowoff connection for strainers smaller than NPS 2.**

T. **Install expansion loops, expansion joints, anchors, and pipe alignment guides as specified in Division 23 Section "Expansion Fittings and Loops for HVAC Piping."**

U. **Identify piping as specified in Division 23 Section "Identification for HVAC Piping and Equipment."**

3.4 *HANGERS AND SUPPORTS*

A. **Hanger, support, and anchor devices are specified in Division 23 Section "Hangers and Supports for HVAC Piping and Equipment." Comply with the following requirements for maximum spacing of supports.**

B. **Seismic restraints are specified in Division 23 Section "Vibration and Seismic Controls for HVAC Piping and Equipment."**

C. **Install the following pipe attachments:**

1. **Adjustable steel clevis hangers for individual horizontal piping less than 20 feet long.**

2. **Adjustable roller hangers and spring hangers for individual horizontal piping 20 feet or longer.**

3. **Pipe Roller: MSS SP-58, Type 44 for multiple horizontal piping 20 feet or longer, supported on a trapeze.**

4. **Spring hangers to support vertical runs.**

5. **Provide copper-clad hangers and supports for hangers and supports in direct contact with copper pipe.**

6. **On plastic pipe, install pads or cushions on bearing surfaces to prevent hanger from scratching pipe.**

D. **Install hangers for steel piping with the following maximum spacing and minimum rod sizes:**

1. **NPS 3/4: Maximum span, 7 feet; minimum rod size, 3/8 inch.**
2. **NPS 1: Maximum span, 7 feet; minimum rod size, 3/8 inch.**
3. **NPS 1-1/4: Maximum span, 7 feet; minimum rod size, 3/8 inch.**
4. **NPS 1-1/2: Maximum span, 9 feet; minimum rod size, 3/8 inch.**
5. **NPS 2: Maximum span, 10 feet; minimum rod size, 3/8 inch.**
6. **NPS 2-1/2: Maximum span, 11 feet; minimum rod size, 1/2 inch.**
7. **NPS 3: Maximum span, 12 feet; minimum rod size, 1/2 inch.**
8. **NPS 3-1/2: Maximum span, 13 feet; minimum rod size, 1/2 inch.**
9. **NPS 4: Maximum span, 14 feet; minimum rod size, 5/8 inch.**

E. **Install hangers for drawn-temper copper tubing with the following maximum spacing and minimum rod sizes:**

1. **NPS 3/4: Maximum span, 5 feet; minimum rod size, 3/8 inch.**
2. **NPS 1: Maximum span, 6 feet; minimum rod size, 3/8 inch.**
3. **NPS 1-1/4: Maximum span, 7 feet; minimum rod size, 3/8 inch.**
4. **NPS 1-1/2: Maximum span, 8 feet; minimum rod size, 3/8 inch.**
5. **NPS 2: Maximum span, 8 feet; minimum rod size, 3/8 inch.**
6. **NPS 2-1/2: Maximum span, 9 feet; minimum rod size, 1/2 inch.**
7. **NPS 3: Maximum span, 10 feet; minimum rod size, 1/2 inch.**

F. **Plastic Piping Hanger Spacing: Space hangers according to pipe manufacturer's written instructions for service conditions. Avoid point loading. Space and install hangers with the fewest practical rigid anchor points.**

G. **Support vertical runs at roof, at each floor, and at 10-foot intervals between floors.**

3.5 *PIPE JOINT CONSTRUCTION*

A. **Join pipe and fittings according to the following requirements and Division 23 Sections specifying piping systems.**

B. **Ream ends of pipes and tubes and remove burrs. Bevel plain ends of steel pipe.**

C. **Remove scale, slag, dirt, and debris from inside and outside of pipe and fittings before assembly.**

D. **Soldered Joints: Apply ASTM B 813, water-flushable flux, unless otherwise indicated, to tube end. Construct joints according to ASTM B 828 or CDA's "Copper Tube Handbook," using lead-free solder alloy complying with ASTM B 32.**

E. **Brazed Joints: Construct joints according to AWS's "Brazing Handbook," "Pipe and Tube" Chapter, using copper-phosphorus brazing filler metal complying with AWS A5.8.**

F. **Threaded Joints: Thread pipe with tapered pipe threads according to ASME B1.20.1. Cut threads full and clean using sharp dies. Ream threaded pipe ends to remove burrs and restore full ID. Join pipe fittings and valves as follows:**

   1. **Apply appropriate tape or thread compound to external pipe threads unless dry seal threading is specified.**

   2. **Damaged Threads: Do not use pipe or pipe fittings with threads that are corroded or damaged. Do not use pipe sections that have cracked or open welds.**

G. **Flanged Joints: Select appropriate gasket material, size, type, and thickness for service application. Install gasket concentrically positioned. Use suitable lubricants on bolt threads.**

H. **Plastic Piping Solvent-Cemented Joints: Clean and dry joining surfaces. Join pipe and fittings according to the following:**

1. **Comply with ASTM F 402 for safe-handling practice of cleaners, primers, and solvent cements.**

2. **CPVC Piping: Join according to ASTM D 2846/D 2846M Appendix.**

3. **PVC Pressure Piping: Join ASTM D 1785 schedule number, PVC pipe and PVC socket fittings according to ASTM D 2672. Join other-than-schedule number PVC pipe and socket fittings according to ASTM D 2855.**

4. **PVC Nonpressure Piping: Join according to ASTM D 2855.**

I. **Grooved Joints: Assemble joints with coupling and gasket, lubricant, and bolts. Cut or roll grooves in ends of pipe based on pipe and coupling manufacturer's written instructions for pipe wall thickness. Use grooved-end fittings and rigid, grooved-end-pipe couplings.**

J. **Mechanically Formed, Copper-Tube-Outlet Joints: Use manufacturer-recommended tool and procedure, and brazed joints.**

3.6 *HYDRONIC SPECIALTIES INSTALLATION*

A. **Install manual air vents at high points in piping, at heat-transfer coils, and elsewhere as required for system air venting.**

B. **Install piping from boiler air outlet, air separator, or air purger to expansion tank with a 2 percent upward slope toward tank.**

C. **Install in-line air separators in pump suction. Install drain valve on air separators NPS 2 and larger.**

D. **Install bypass chemical feeders in each hydronic system where indicated, in upright position with top of funnel not more than 48 inches above the floor. Install feeder in minimum NPS 3/4 bypass line, from main with full-size, full-port, ball valve in the main between bypass connections. Install NPS 3/4 pipe from chemical feeder drain, to nearest equipment drain and include a full-size, full-port, ball valve.**

E. **Install expansion tanks above the air separator. Install tank fitting in tank bottom and charge tank. Use manual vent for initial fill to establish proper water level in tank.**

1. **Install tank fittings that are shipped loose.**

2. **Support tank from floor or structure above with sufficient strength to carry weight of tank, piping connections, fittings, plus tank full of water. Do not overload building components and structural members.**

3.7 *TERMINAL EQUIPMENT CONNECTIONS*

A. **Sizes for supply and return piping connections shall be the same as or larger than equipment connections.**

B. **Install control valves in accessible locations close to connected equipment.**

C. **Install bypass piping with globe valve around control valve. If parallel control valves are installed, only one bypass is required.**

D. **Install ports for pressure gages and thermometers at coil inlet and outlet connections according to Division 23 Section "Meters and Gages for HVAC Piping."**

3.8 *CHEMICAL TREATMENT*

A. **Fill system with fresh water and add liquid alkaline compound with emulsifying agents and detergents to remove grease and petroleum products from piping. Circulate solution for a minimum of 24 hours, drain, clean strainer screens, and refill with fresh water.**

B. **Add initial chemical treatment and maintain water quality in ranges noted above for the first year of operation.**

C. **Fill systems indicated to have antifreeze or glycol solutions with the following concentrations:**

1. **Hot-Water Heating Piping: Minimum <Insert number> percent [ethylene] [propylene] glycol.**

2. **Chilled-Water Heating Piping: Minimum <Insert number> percent [ethylene] [propylene] glycol.**

3.9 *FIELD QUALITY CONTROL*

A. **Prepare hydronic piping according to ASME B31.9 and as follows:**

1. **Leave joints, including welds, uninsulated and exposed for examination during test.**

2. **Provide temporary restraints for expansion joints that cannot sustain reactions due to test pressure. If temporary restraints are impractical, isolate expansion joints from testing.**

3. **Flush hydronic piping systems with clean water; then remove and clean or replace strainer screens.**

4. **Isolate equipment from piping. If a valve is used to isolate equipment, its closure shall be capable of sealing against test pressure without damage to valve. Install blinds in flanged joints to isolate equipment.**

5. **Install safety valve, set at a pressure no more than one-third higher than test pressure, to protect against damage by expanding liquid or other source of overpressure during test.**

B. **Perform the following tests on hydronic piping:**

1. **Use ambient temperature water as a testing medium unless there is risk of damage due to freezing. Another liquid that is safe for workers and compatible with piping may be used.**

2. **While filling system, use vents installed at high points of system to release air. Use drains installed at low points for complete draining of test liquid.**

3. **Isolate expansion tanks and determine that hydronic system is full of water.**

4. **Subject piping system to hydrostatic test pressure that is not less than 1.5 times the system's working pressure. Test pressure shall**

not exceed maximum pressure for any vessel, pump, valve, or other component in system under test. Verify that stress due to pressure at bottom of vertical runs does not exceed 90 percent of specified minimum yield strength or 1.7 times "SE" value in Appendix A in ASME B31.9, "Building Services Piping."

5. **After hydrostatic test pressure has been applied for at least 10 minutes, examine piping, joints, and connections for leakage. Eliminate leaks by tightening, repairing, or replacing components, and repeat hydrostatic test until there are no leaks.**

6. **Prepare written report of testing.**

C. **Perform the following before operating the system:**

1. **Open manual valves fully.**

2. **Inspect pumps for proper rotation.**

3. **Set makeup pressure-reducing valves for required system pressure.**

4. **Inspect air vents at high points of system and determine if all are installed and operating freely (automatic type), or bleed air completely (manual type).**

5. **Set temperature controls so all coils are calling for full flow.**

6. **Inspect and set operating temperatures of hydronic equipment, such as boilers, chillers, cooling towers, to specified values.**

7. **Verify lubrication of motors and bearings.**

END OF SECTION 232113

SECTION 232300 - REFRIGERANT PIPING

PART 1 - GENERAL

1.1 *SUMMARY*

A. **This Section includes refrigerant piping used for air-conditioning applications.**

1.2 *PERFORMANCE REQUIREMENTS*

A. **Line Test Pressure for Refrigerant R-22:**

1. **Suction Lines for Air-Conditioning Applications: 185 psig.**

2. **Suction Lines for Heat-Pump Applications: 325 psig.**

3. **Hot-Gas and Liquid Lines: 325 psig.**

1.3 *SUBMITTALS*

A. **Product Data: For each type of valve and refrigerant piping specialty indicated. Include pressure drop based on manufacturer's test data.**

B. **Shop Drawings: Show layout of refrigerant piping and specialties, including pipe, tube, and fitting sizes, flow capacities, valve arrangements and locations, slopes of horizontal runs, oil traps, double risers, wall and floor penetrations, and equipment connection details. Show interface and spatial relationships between piping and equipment.**

1. **Refrigerant piping indicated on Drawings is schematic only. Size piping and design actual piping layout, including oil traps, double risers, specialties, and pipe and tube sizes to accommodate, as a minimum, equipment provided, elevation difference between compressor and evaporator, and length of piping to ensure proper operation and compliance with warranties of connected equipment.**

C. **Field quality-control test reports.**

D. **Operation and maintenance data.**

1.4 *QUALITY ASSURANCE*

A. **Comply with ASHRAE 15, "Safety Code for Refrigeration Systems."**

B. **Comply with ASME B31.5, "Refrigeration Piping and Heat Transfer Components."**

1.5 *PRODUCT STORAGE AND HANDLING*

A. **Store piping in a clean and protected area with end caps in place to ensure that piping interior and exterior are clean when installed.**

PART 2 - PRODUCTS

2.1 *COPPER TUBE AND FITTINGS*

A. **Copper Tube: [**ASTM B 88, Type K or L**] [ASTM B 280, Type ACR].**

B. **Wrought-Copper Fittings: ASME B16.22.**

C. **Wrought-Copper Unions: ASME B16.22.**

D. **Solder Filler Metals: ASTM B 32. Use 95-5 tin antimony or alloy HB solder to join copper socket fittings on copper pipe.**

E. **Brazing Filler Metals: AWS A5.8.**

F. **Flexible Connectors:**

1. **Body: Tin-bronze bellows with woven, flexible, tinned-bronze-wire-reinforced protective jacket.**

2. **End Connections: Socket ends.**

3. **Offset Performance: Capable of minimum 3/4-inch misalignment in minimum 7-inch- long assembly.**

4. **Pressure Rating: Factory test at minimum 500 psiga).**

5. **Maximum Operating Temperature: 250 deg F.**

2.2 *VALVES AND SPECIALTIES*

A. **Diaphragm Packless Valves:**

1. **Body and Bonnet: Forged brass or cast bronze; globe design with straight-through or angle pattern.**

2. **Diaphragm: Phosphor bronze and stainless steel with stainless-steel spring.**

3. **Operator: Rising stem and hand wheel.**

4. **Seat: Nylon.**

5. **End Connections: Socket, union, or flanged.**

6. **Working Pressure Rating: 500 psig.**

7. **Maximum Operating Temperature: 275 deg F.**

B. **Packed-Angle Valves:**

1. **Body and Bonnet: Forged brass or cast bronze.**

2. **Packing: Molded stem, back seating, and replaceable under pressure.**

3. **Operator: Rising stem.**

4. **Seat: Nonrotating, self-aligning polytetrafluoroethylene.**

5. **Seal Cap: Forged-brass or valox hex cap.**

6. **End Connections: Socket, union, threaded, or flanged.**

7. **Working Pressure Rating: 500 psig.**

8. **Maximum Operating Temperature: 275 deg F.**

C. **Check Valves:**

1. **Body: Ductile iron, forged brass, or cast bronze; globe pattern.**

2. **Bonnet: Bolted ductile iron, forged brass, or cast bronze; or brass hex plug.**

3. **Piston: Removable polytetrafluoroethylene seat.**

4. **Closing Spring: Stainless steel.**

5. **Manual Opening Stem: Seal cap, plated-steel stem, and graphite seal.**

6. **End Connections: Socket, union, threaded, or flanged.**

7. **Maximum Opening Pressure: 0.50 psig.**

8. **Working Pressure Rating: 500 psig.**

9. **Maximum Operating Temperature: 275 deg F.**

D. **Service Valves:**

1. **Body: Forged brass with brass cap including key end to remove core.**

2. **Core: Removable ball-type check valve with stainless-steel spring.**

3. **Seat: Polytetrafluoroethylene.**

4. **End Connections: Copper spring.**

5. **Working Pressure Rating: 500 psig.**

E. **Solenoid Valves: Comply with ARI 760 and UL 429; listed and labeled by an NRTL.**

1. **Body and Bonnet: Plated steel.**

2. **Solenoid Tube, Plunger, Closing Spring, and Seat Orifice: Stainless steel.**

3. **Seat: Polytetrafluoroethylene.**

4. **End Connections: Threaded.**

5. **Electrical: Molded, watertight coil in NEMA 250 enclosure of type required by location with 1/2-inch conduit adapter, and [24] [115] [208]-V ac coil.**

6. **Working Pressure Rating: 400 psig.**

7. **Maximum Operating Temperature: 240 deg F.**

8. **Manual operator.**

F. **Safety Relief Valves: Comply with ASME Boiler and Pressure Vessel Code; listed and labeled by an NRTL.**

1. **Body and Bonnet: Ductile iron and steel, with neoprene O-ring seal.**

2. **Piston, Closing Spring, and Seat Insert: Stainless steel.**

3. **Seat Disc: Polytetrafluoroethylene.**

4. **End Connections: Threaded.**

5. **Working Pressure Rating: 400 psig.**

6. **Maximum Operating Temperature: 240 deg F.**

G. **Thermostatic Expansion Valves: Comply with ARI 750.**

1. **Body, Bonnet, and Seal Cap: Forged brass or steel.**

2. **Diaphragm, Piston, Closing Spring, and Seat Insert: Stainless steel.**

3. **Packing and Gaskets: Non-asbestos.**

4. **Capillary and Bulb: Copper tubing filled with refrigerant charge.**

5. **Suction Temperature: [**40 deg F**] <Insert temperature>.**

6. **Superheat: [Adjustable] [Nonadjustable].**

7. **Reverse-flow option (for heat-pump applications).**

8. **End Connections: Socket, flare, or threaded union.**

9. **Working Pressure Rating: [**700 psig**] [**450 psig**] <Insert value>.**

H. **Straight-Type Strainers:**

1. **Body: Welded steel with corrosion-resistant coating.**

2. **Screen: 100-mesh stainless steel.**

3. **End Connections: Socket or flare.**

4. **Working Pressure Rating: 500 psig.**

5. **Maximum Operating Temperature: 275 deg F.**

I. **Angle-Type Strainers:**

1. **Body: Forged brass or cast bronze.**

2. **Drain Plug: Brass hex plug.**

3. **Screen: 100-mesh monel.**

4. **End Connections: Socket or flare.**

5. **Working Pressure Rating: 500 psig.**

6. **Maximum Operating Temperature: 275 deg F.**

J. **Moisture/Liquid Indicators:**

1. **Body: Forged brass.**

2. **Window: Replaceable, clear, fused glass window with indicating element protected by filter screen.**

3. **Indicator: Color coded to show moisture content in ppm.**

4. **Minimum Moisture Indicator Sensitivity: Indicate moisture above 60 ppm.**

5. **End Connections: Socket or flare.**

6. **Working Pressure Rating: 500 psig.**

7. **Maximum Operating Temperature: 240 deg F.**

K. **Replaceable-Core Filter Dryers: Comply with ARI 730.**

1. **Body and Cover: Painted-steel shell with ductile-iron cover, stainless-steel screws, and neoprene gaskets.**

2. **Filter Media: 10 micron, pleated with integral end rings; stainless-steel support.**

3. **Desiccant Media: Activated [alumina] [charcoal].**

4. **Designed for reverse flow (for heat-pump applications).**

5. **End Connections: Socket.**

6. **Access Ports: NPS 1/4 connections at entering and leaving sides for pressure differential measurement.**

7. **Maximum Pressure Loss: [**2 psig**] <Insert value>.**

8. **Rated Flow: <Insert** tons**.>**

9. **Working Pressure Rating: 500 psig.**

10. **Maximum Operating Temperature: 240 deg F.**

L. **Permanent Filter Dryers: Comply with ARI 730.**

1. **Body and Cover: Painted-steel shell.**

2. **Filter Media: 10 micron, pleated with integral end rings; stainless-steel support.**

3. **Desiccant Media: Activated [alumina] [charcoal].**

4. **Designed for reverse flow (for heat-pump applications).**

5. **End Connections: Socket.**

6. **Access Ports: NPS 1/4 connections at entering and leaving sides for pressure differential measurement.**

7. **Maximum Pressure Loss: [**2 psig**] <Insert value>.**

8. **Rated Flow: <Insert** tons**.>**

9. **Working Pressure Rating: 500 psig.**

10. **Maximum Operating Temperature: 240 deg F.**

M. **Liquid Accumulators: Comply with ARI 495.**

1. **Body: Welded steel with corrosion-resistant coating.**

2. **End Connections: Socket or threaded.**

3. **Working Pressure Rating: 500 psig.**

4. **Maximum Operating Temperature: 275 deg F.**

2.3 *REFRIGERANTS*

A. **Available Manufacturers: Subject to compliance with requirements, manufacturers offering products that may be incorporated into the Work include, but are not limited to, the following:**

B. **Manufacturers: Subject to compliance with requirements, provide products by one of the following:**

1. **Atofina Chemicals, Inc.**

2. **DuPont Company; Fluorochemicals Div.**

3. **Honeywell, Inc.; Genetron Refrigerants.**

4. **INEOS Fluor Americas LLC.**

5. **<Insert manufacturer's name.>**

C. **ASHRAE 34, R-22: Monochlorodifluoromethane.**

PART 3 - EXECUTION

3.1 *PIPING APPLICATIONS*

A. **Suction Lines [**NPS 1-1/2 **and Smaller] <Insert pipe size range> for Conventional Air-Conditioning Applications: Copper, Type ACR, annealed-temper tubing and wrought-copper fittings with [brazed] [or] [soldered] joints.**

B. **Suction Lines [**NPS 4 **and Smaller] [**NPS 2 to NPS 4**] <Insert pipe size range> for Conventional Air-Conditioning Applications: Copper, Type [ACR] [**L**], drawn-temper tubing and wrought-copper fittings with [brazed] [or] [soldered] joints.**

C. **Hot-Gas and Liquid Lines[, and Suction Lines for Heat-Pump Applications]: Copper, Type ACR, annealed-temper tubing and wrought-copper fittings with [brazed] [or] [soldered] joints.**

D. **Hot-Gas and Liquid Lines[, and Suction Lines for Heat-Pump Applications]: Copper, Type [ACR] [**K**] [**L**], drawn-temper tubing and wrought-copper fittings with soldered joints.**

E. **Hot-Gas and Liquid Lines[, and Suction Lines for Heat-Pump Applications]:**

1. **[**NPS 1-1/2 **and Smaller] <Insert pipe size range>: Copper, Type ACR, annealed-temper tubing and wrought-copper fittings with [brazed] [or] [soldered] joints.**

2. [NPS 1-1/2 **and Smaller] <Insert pipe size range>: Copper, Type [ACR] [**L**], drawn-temper tubing and wrought-copper fittings with [brazed] [or] [soldered] joints.**

3. [NPS 2 to NPS 3**] <Insert pipe size range>: Copper, Type K, annealed- or drawn-temper tubing and wrought-copper fittings with [brazed] [or] [soldered] joints.**

4. [NPS 4**] <Insert pipe size>: Copper, Type [ACR] [**K**] [**L**], drawn-temper tubing and wrought-copper fittings with soldered joints.**

F. **Safety-Relief-Valve Discharge Piping: Copper, Type [ACR] [**K**] [**L**], drawn-temper tubing and wrought-copper fittings with soldered joints.**

G. **Safety-Relief-Valve Discharge Piping:**

1. [NPS 1-1/2 **and Smaller] <Insert pipe size range>: Copper, Type ACR, annealed-temper tubing and wrought-copper fittings with [brazed] [or] [soldered] joints.**

2. [NPS 1-1/2 **and Smaller] <Insert pipe size range>: Copper, Type [ACR] [**L**], drawn-temper tubing and wrought-copper fittings with brazed joints.**

3. [NPS 2 to NPS 3**] <Insert pipe size range>: Copper, Type K, annealed- or drawn-temper tubing and wrought-copper fittings with [brazed] [or] [soldered] joints.**

4. [NPS 4**] <Insert pipe size>: Copper, Type [ACR] [**K**] [**L**], drawn-temper tubing and wrought-copper fittings with soldered joints.**

3.2 *VALVE AND SPECIALTY APPLICATIONS*

A. **Install [diaphragm packless] [packed-angle] valves in suction and discharge lines of compressor.**

B. **Install service valves for gage taps at strainers if they are not an integral part of strainers.**

C. **Install a check valve at the compressor discharge and a liquid accumulator at the compressor suction connection.**

D. **Except as otherwise indicated, install [diaphragm packless] [packed-angle] valves on inlet and outlet side of filter dryers.**

E. **Install a full-sized, three-valve bypass around filter dryers.**

F. **Install solenoid valves upstream from each expansion valve. Install solenoid valves in horizontal lines with coil at top.**

G. **Install thermostatic expansion valves as close as possible to distributors on evaporators.**

   1. **Install valve so diaphragm case is warmer than bulb.**

   2. **Secure bulb to clean, straight, horizontal section of suction line using two bulb straps. Do not mount bulb in a trap or at bottom of the line.**

   3. **If external equalizer lines are required, make connection where it will reflect suction-line pressure at bulb location.**

H. **Install safety relief valves where required by ASME Boiler and Pressure Vessel Code. Pipe safety-relief-valve discharge line to outside according to ASHRAE 15.**

I. **Install moisture/liquid indicators in liquid line at the inlet of the thermostatic expansion valve or at the inlet of the evaporator coil capillary tube.**

J. **Install strainers upstream from and adjacent to the following unless they are furnished as an integral assembly for device being protected:**

   1. **Solenoid valves.**

   2. **Thermostatic expansion valves.**

   3. **Compressor.**

K. **Install filter dryers in liquid line between compressor and thermostatic expansion valve[, and in the suction line at the compressor].**

L. **Install flexible connectors at compressors.**

3.3 *PIPING INSTALLATION*

A. **Drawing plans, schematics, and diagrams indicate general location and arrangement of piping systems; indicated locations and arrangements were used to size pipe and calculate friction loss, expansion, pump sizing, and other design considerations. Install piping as indicated unless deviations to layout are approved on Shop Drawings.**

B. **Install refrigerant piping according to ASHRAE 15.**

C. **Install piping in concealed locations unless otherwise indicated and except in equipment rooms and service areas.**

D. **Install piping indicated to be exposed and piping in equipment rooms and service areas at right angles or parallel to building walls. Diagonal runs are prohibited unless specifically indicated otherwise.**

E. **Install piping above accessible ceilings to allow sufficient space for ceiling panel removal.**

F. **Install piping adjacent to machines to allow service and maintenance.**

G. **Install piping free of sags and bends.**

H. **Install fittings for changes in direction and branch connections.**

I. **Select system components with pressure rating equal to or greater than system operating pressure.**

J. **Refer to Division 23 Sections "Instrumentation and Control for HVAC" and "Sequence of Operations for HVAC Controls" for solenoid valve controllers, control wiring, and sequence of operation.**

K. **Install piping as short and direct as possible, with a minimum number of joints, elbows, and fittings.**

L. **Arrange piping to allow inspection and service of refrigeration equipment. Install valves and specialties in accessible locations to allow for service and inspection. Install access doors or panels as specified in Division 08 Section "Access Doors and Frames" if valves or equipment requiring maintenance is concealed behind finished surfaces.**

M. **Install refrigerant piping in protective conduit where installed belowground.**

N. **Install refrigerant piping in rigid or flexible conduit in locations where exposed to mechanical injury.**

O. **Slope refrigerant piping as follows:**

1. **Install horizontal hot-gas discharge piping with a uniform slope downward away from compressor.**

2. **Install horizontal suction lines with a uniform slope downward to compressor.**

3. **Install traps and double risers to entrain oil in vertical runs.**

4. **Liquid lines may be installed level.**

P. **When brazing or soldering, remove solenoid-valve coils and sight glasses; also remove valve stems, seats, and packing, and accessible internal parts of refrigerant specialties. Do not apply heat near expansion-valve bulb.**

Q. **Install pipe sleeves at penetrations in exterior walls and floor assemblies.**

R. **Seal penetrations through fire and smoke barriers according to Division 07 Section "Penetration Firestopping."**

S. **Install piping with adequate clearance between pipe and adjacent walls and hangers or between pipes for insulation installation.**

T. **Install sleeves through floors, walls, or ceilings, sized to permit installation of full-thickness insulation.**

U. **Seal pipe penetrations through exterior walls according to Division 07 Section "Joint Sealants" for materials and methods.**

V. **Identify refrigerant piping and valves according to Division 23 Section "Identification for HVAC Piping and Equipment."**

3.4 *PIPE JOINT CONSTRUCTION*

A. **Soldered Joints: Construct joints according to ASTM B 828 or CDA's "Copper Tube Handbook."**

B. **Brazed Joints: Construct joints according to AWS's "Brazing Handbook," Chapter "Pipe and Tube."**

1. **Use Type BcuP, copper-phosphorus alloy for joining copper socket fittings with copper pipe.**

2. **Use Type BAg, cadmium-free silver alloy for joining copper with bronze or steel.**

3.5 *HANGERS AND SUPPORTS*

A. **Hanger, support, and anchor products are specified in Division 23 Section "Hangers and Supports for HVAC Piping and Equipment."**

B. **Install the following pipe attachments:**

1. **Adjustable steel clevis hangers for individual horizontal runs less than 20 feet long.**

2. **Roller hangers and spring hangers for individual horizontal runs 20 feet or longer.**

3. **Pipe Roller: MSS SP-58, Type 44 for multiple horizontal piping 20 feet or longer, supported on a trapeze.**

4. **Spring hangers to support vertical runs.**

5. **Copper-clad hangers and supports for hangers and supports in direct contact with copper pipe.**

C. **Install hangers for copper tubing with the following maximum spacing and minimum rod sizes:**

1. **NPS 1/2: Maximum span, 60 inches; minimum rod size, 1/4 inch.**

2. **NPS 5/8: Maximum span, 60 inches; minimum rod size, 1/4 inch.**

3. **NPS 1: Maximum span, 72 inches; minimum rod size, 1/4 inch.**

4. **NPS 1-1/4: Maximum span, 96 inches; minimum rod size, 3/8 inch.**

5. **NPS 1-1/2: Maximum span, 96 inches; minimum rod size, 3/8 inch.**

6. **NPS 2: Maximum span, 96 inches; minimum rod size, 3/8 inch.**

7. **NPS 2-1/2: Maximum span, 108 inches; minimum rod size, 3/8 inch.**

8. **NPS 3: Maximum span, 10 feet; minimum rod size, 3/8 inch.**

9. **NPS 4: Maximum span, 12 feet; minimum rod size, 1/2 inch.**

D. **Support multifloor vertical runs at least at each floor.**

3.6 *FIELD QUALITY CONTROL*

A. **Perform tests and inspections and prepare test reports.**

B. **Tests and Inspections:**

1. **Comply with ASME B31.5, Chapter VI.**

2. **Test refrigerant piping and specialties. Isolate compressor, condenser, evaporator, and safety devices from test pressure if they are not rated above the test pressure.**

3. **Test high- and low-pressure side piping of each system separately at not less than the pressures indicated in Part 1 "Performance Requirements" Article.**

a. ***Fill system with nitrogen to the required test pressure.***

b. ***System shall maintain test pressure at the manifold gage throughout duration of test.***

c. ***Test joints and fittings with electronic leak detector or by brushing a small amount of soap and glycerin solution over joints.***

d. ***Remake leaking joints using new materials, and retest until satisfactory results are achieved.***

3.7 *SYSTEM CHARGING*

A. **Charge system using the following procedures:**

1. **Install core in filter dryers after leak test but before evacuation.**

2. **Evacuate entire refrigerant system with a vacuum pump to 500 micrometers. If vacuum holds for 12 hours, system is ready for charging.**

3. **Break vacuum with refrigerant gas, allowing pressure to build up to 2 psig.**

4. **Charge system with a new filter-dryer core in charging line.**

3.8 *ADJUSTING*

A. **Adjust thermostatic expansion valve to obtain proper evaporator superheat.**

B. **Adjust high- and low-pressure switch settings to avoid short cycling in response to fluctuating suction pressure.**

C. **Adjust set-point temperature of air-conditioning or chilled-water controllers to the system design temperature.**

D. **Perform the following adjustments before operating the refrigeration system, according to manufacturer's written instructions:**

1. **Open shutoff valves in condenser water circuit.**

2. **Verify that compressor oil level is correct.**

3. **Open compressor suction and discharge valves.**

4. **Open refrigerant valves except bypass valves that are used for other purposes.**

5. **Check open compressor-motor alignment and verify lubrication for motors and bearings.**

E. **Replace core of replaceable filter dryer after system has been adjusted and after design flow rates and pressures are established.**

END OF SECTION 232300

SECTION 233113 - METAL DUCTS

PART 1 - GENERAL

1.1 *SUMMARY*

A. **Section Includes:**

1. **Rectangular ducts and fittings.**
2. **Round ducts and fittings.**
3. **Sheet metal materials.**
4. **Duct liner.**
5. **Sealants and gaskets.**
6. **Hangers and supports.**
7. **Seismic-restraint devices.**

B. **Related Sections:**

1. **Division 23 Section "Testing, Adjusting, and Balancing for HVAC" for testing, adjusting, and balancing requirements for metal ducts.**
2. **Division 23 Section "Nonmetal Ducts" for fibrous-glass ducts, thermoset fiber-reinforced plastic ducts, thermoplastic ducts, PVC ducts, and concrete ducts.**
3. **Division 23 Section "HVAC Casings" for factory- and field-fabricated casings for mechanical equipment.**
4. **Division 23 Section "Air Duct Accessories" for dampers, sound-control devices, duct-mounting access doors and panels, turning vanes, and flexible ducts.**

1.2 *PERFORMANCE REQUIREMENTS*

A. **Delegated Duct Design: Duct construction, including sheet metal thicknesses, seam and joint construction, reinforcements, and hangers and supports, shall comply with SMACNA's "HVAC Duct Construction Standards - Metal and Flexible" and performance requirements and design criteria indicated in "Duct Schedule" Article.**

B. **Structural Performance: Duct hangers and supports[and seismic restraints] shall withstand the effects of gravity[and seismic] loads and stresses within limits and under conditions described in SMACNA's "HVAC Duct Construction Standards - Metal and Flexible" [and] [ASCE/SEI 7.] [SMACNA's "Seismic Restraint Manual: Guidelines for Mechanical Systems."] <Insert document.>**

1. **Seismic Hazard Level A: Seismic force to weight ratio, 0.48.**

2. **Seismic Hazard Level B: Seismic force to weight ratio, 0.30.**

3. **Seismic Hazard Level C: Seismic force to weight ratio, 0.15.**

C. **Airstream Surfaces: Surfaces in contact with the airstream shall comply with requirements in ASHRAE 62.1-2004.**

1.3 *SUBMITTALS*

A. **Product Data: For each type of product indicated.**

B. **LEED Submittals:**

1. **Product Data for Prerequisite EQ 1: Documentation indicating that duct systems comply with ASHRAE 62.1-2004, Section 5 - "Systems and Equipment."**

2. **Product Data for Prerequisite EA 2: Documentation indicating that duct systems comply with ASHRAE/IESNA 90.1-2004, Section 6.4.4 - "HVAC System Construction and Insulation."**

3. **Duct-Cleaning Test Report for Prerequisite EQ 1: Documentation of work performed for compliance with ASHRAE 62.1-2004, Section 7.2.4 - "Ventilation System Start-Up."**

4. **Product Data for Credit EQ 4.1: For adhesives and sealants, including printed statement of VOC content.**

C. **Shop Drawings:**

1. **Fabrication, assembly, and installation, including plans, elevations, sections, components, and attachments to other work.**

2. **Factory- and shop-fabricated ducts and fittings.**

3. **Duct layout indicating sizes, configuration, liner material, and static-pressure classes.**

4. **Elevation of top of ducts.**

5. **Dimensions of main duct runs from building grid lines.**

6. **Fittings.**

7. **Reinforcement and spacing.**

8. **Seam and joint construction.**

9. **Penetrations through fire-rated and other partitions.**

10. **Equipment installation based on equipment being used on Project.**

11. **Locations for duct accessories, including dampers, turning vanes, and access doors and panels.**

12. **Hangers and supports, including methods for duct and building attachment[, seismic restraints,] and vibration isolation.**

13. **<Insert lists of areas or systems requiring Shop Drawings.>**

D. **Delegated-Design Submittal:**

1. **Sheet metal thicknesses.**

2. **Joint and seam construction and sealing.**

3. **Reinforcement details and spacing.**

4. **Materials, fabrication, assembly, and spacing of hangers and supports.**

5. **Design Calculations: Calculations[, including analysis data signed and sealed by the qualified professional engineer responsible for their preparation] for selecting hangers and supports[and seismic restraints].**

E. **Coordination Drawings: Plans, drawn to scale, on which the following items are shown and coordinated with each other, using input from installers of the items involved:**

1. **Duct installation in congested spaces, indicating coordination with general construction, building components, and other building services. Indicate proposed changes to duct layout.**

2. **Suspended ceiling components.**

3. **Structural members to which duct will be attached.**

4. **Size and location of initial access modules for acoustical tile.**

5. **Penetrations of smoke barriers and fire-rated construction.**

6. **Items penetrating finished ceiling including the following:**

   a. ***Lighting fixtures.***

   b. ***Air outlets and inlets.***

   c. ***Speakers.***

   d. ***Sprinklers.***

   e. ***Access panels.***

   f. ***Perimeter moldings.***

   g. ***<Insert item>.***

F. **Welding certificates.**

1.4 *QUALITY ASSURANCE*

A. **Welding Qualifications: Qualify procedures and personnel according to [AWS D1.1/D1.1M, "Structural Welding Code - Steel," for hangers and supports.] [AWS D1.2/D1.2M, "Structural Welding Code - Aluminum," for aluminum supports.] [AWS D9.1M/D9.1, "Sheet Metal Welding Code," for duct joint and seam welding.]**

B. **Welding Qualifications: Qualify procedures and personnel according to the following:**

1. **AWS D1.1/D1.1M, "Structural Welding Code - Steel," for hangers and supports.**

2. **AWS D1.2/D1.2M, "Structural Welding Code - Aluminum," for aluminum supports.**

3. **AWS D9.1M/D9.1, "Sheet Metal Welding Code," for duct joint and seam welding.**

C. **ASHRAE Compliance: Applicable requirements in ASHRAE 62.1-2004, Section 5 - "Systems and Equipment" and Section 7 - "Construction and System Start-Up."**

D. **ASHRAE/IESNA Compliance: Applicable requirements in ASHRAE/IESNA 90.1-2004, Section 6.4.4 - "HVAC System Construction and Insulation."**

PART 2 - PRODUCTS

2.1 *RECTANGULAR DUCTS AND FITTINGS*

A. **General Fabrication Requirements: Comply with SMACNA's "HVAC Duct Construction Standards - Metal and Flexible" based on indicated static-pressure class unless otherwise indicated.**

B. **Transverse Joints: Select joint types and fabricate according to SMACNA's "HVAC Duct Construction Standards - Metal and Flexible," Figure 1-4, "Transverse (Girth) Joints," for static-pressure class, applicable sealing requirements, materials involved, duct-support intervals, and other provisions in SMACNA's "HVAC Duct Construction Standards - Metal and Flexible."**

C. **Longitudinal Seams: Select seam types and fabricate according to SMACNA's "HVAC Duct Construction Standards - Metal and Flexible," Figure 1-5, "Longitudinal Seams - Rectangular Ducts," for static-pressure class, applicable sealing requirements, materials involved, duct-support intervals, and other provisions in SMACNA's "HVAC Duct Construction Standards - Metal and Flexible."**

D. **Elbows, Transitions, Offsets, Branch Connections, and Other Duct Construction: Select types and fabricate according to SMACNA's "HVAC Duct Construction Standards - Metal and Flexible," Chapter 2, "Fittings and Other Construction," for static-pressure class, applicable sealing requirements, materials involved, duct-support intervals, and other provisions in SMACNA's "HVAC Duct Construction Standards - Metal and Flexible."**

2.2 *ROUND DUCTS AND FITTINGS*

A. **General Fabrication Requirements: Comply with SMACNA's "HVAC Duct Construction Standards - Metal and Flexible," Chapter 3, "Round, Oval, and Flexible Duct," based on indicated static-pressure class unless otherwise indicated.**

1. **Manufacturers: Subject to compliance with requirements, [provide products by one of the following] [available manufacturers offering products that may be incorporated into the Work include, but are not limited to, the following]:**

a. ***Lindab Inc.***

b. ***McGill AirFlow LLC.***

c. ***SEMCO Incorporated.***

d. ***Sheet Metal Connectors, Inc.***

e. ***Spiral Manufacturing Co., Inc.***

f. ***<Insert manufacturer's name>.***

B. **Transverse Joints: Select joint types and fabricate according to SMACNA's "HVAC Duct Construction Standards - Metal and Flexible," Figure 3-2, "Transverse Joints - Round Duct," for static-**

pressure class, applicable sealing requirements, materials involved, duct-support intervals, and other provisions in SMACNA's "HVAC Duct Construction Standards - Metal and Flexible."

1. **Transverse Joints in Ducts Larger Than [**60 Inches**] <Insert dimension> in Diameter: Flanged.**

C. **Longitudinal Seams: Select seam types and fabricate according to SMACNA's "HVAC Duct Construction Standards - Metal and Flexible," Figure 3-1, "Seams - Round Duct and Fittings," for static-pressure class, applicable sealing requirements, materials involved, duct-support intervals, and other provisions in SMACNA's "HVAC Duct Construction Standards - Metal and Flexible."**

1. **Fabricate round ducts larger Than 90 inches in diameter with butt-welded longitudinal seams.**

D. **Tees and Laterals: Select types and fabricate according to SMACNA's "HVAC Duct Construction Standards - Metal and Flexible," Figure 3-4, "90 Degree Tees and Laterals," and Figure 3-5, "Conical Tees," for static-pressure class, applicable sealing requirements, materials involved, duct-support intervals, and other provisions in SMACNA's "HVAC Duct Construction Standards - Metal and Flexible."**

2.3 *SHEET METAL MATERIALS*

A. **General Material Requirements: Comply with SMACNA's "HVAC Duct Construction Standards - Metal and Flexible" for acceptable materials, material thicknesses, and duct construction methods unless otherwise indicated. Sheet metal materials shall be free of pitting, seam marks, roller marks, stains, discolorations, and other imperfections.**

B. **Galvanized Sheet Steel: Comply with ASTM A 653/A 653M.**

1. **Galvanized Coating Designation: [**G60**] [**G90**].**

2. **Finishes for Surfaces Exposed to View: Mill phosphatized.**

C. **Carbon-Steel Sheets: Comply with ASTM A 1008/A 1008M, with oiled, matte finish for exposed ducts.**

D. **Stainless-Steel Sheets: Comply with ASTM A 480/A 480M, Type 304 or 316, as indicated in the "Duct Schedule" Article; cold rolled, annealed, sheet. Exposed surface finish shall be No. 2B, No. 2D, No. 3, or No. 4 as indicated in the "Duct Schedule" Article.**

E. **Aluminum Sheets: Comply with ASTM B 209 Alloy 3003, H14 temper; with mill finish for concealed ducts, and standard, one-side bright finish for duct surfaces exposed to view.**

F. **Reinforcement Shapes and Plates: ASTM A 36/A 36M, steel plates, shapes, and bars; black and galvanized.**

1. **Where black- and galvanized-steel shapes and plates are used to reinforce aluminum ducts, isolate the different metals with butyl rubber, neoprene, or EPDM gasket materials.**

G. **Tie Rods: Galvanized steel, 1/4-inch minimum diameter for lengths 36 inches or less; 3/8-inch minimum diameter for lengths longer than 36 inches.**

2.4 *DUCT LINER*

A. **Fibrous-Glass Duct Liner: Comply with ASTM C 1071, NFPA 90A, or NFPA 90B; and with NAIMA AH124, "Fibrous Glass Duct Liner Standard."**

1. **Manufacturers: Subject to compliance with requirements, [provide products by one of the following] [available manufacturers offering products that may be incorporated into the Work include, but are not limited to, the following]:**

2. **Basis-of-Design Product: Subject to compliance with requirements, provide [product indicated on Drawings] <Insert manufacturer's name; product name or designation> or comparable product by one of the following:**

a. ***CertainTeed Corporation; Insulation Group.***

b. ***Johns Manville.***

c. ***Knauf Insulation.***

d. ***Owens Corning.***

e. ***<Insert manufacturer's name>.***

3. **Maximum Thermal Conductivity:**

a. ***Type I, Flexible: [****0.27 Btu x in./h x sq. ft. x deg F****] <Insert conductivity> at 75 deg F mean temperature.***

b. ***Type II, Rigid: [****0.23 Btu x in./h x sq. ft. x deg F****] <Insert conductivity> at 75 deg F mean temperature.***

4. **Antimicrobial Erosion-Resistant Coating: Apply to the surface of the liner that will form the interior surface of the duct to act as a moisture repellent and erosion-resistant coating. Antimicrobial compound shall be tested for efficacy by an NRTL and registered by the EPA for use in HVAC systems.**

5. **[Solvent] [Water]-Based Liner Adhesive: Comply with NFPA 90A or NFPA 90B and with ASTM C 916.**

a. ***For indoor applications, use adhesive that has a VOC content of 80 g/L or less when calculated according to 40 CFR 59, Subpart D (EPA Method 24).***

B. **Insulation Pins and Washers:**

1. **Cupped-Head, Capacitor-Discharge-Weld Pins: Copper- or zinc-coated steel pin, fully annealed for capacitor-discharge welding, [**0.106-inch-**] [**0.135-inch-**] diameter shank, length to suit depth of insulation indicated with integral 1-1/2-inch galvanized carbon-steel washer.**

2. **Insulation-Retaining Washers: Self-locking washers formed from 0.016-inch- thick [galvanized steel] [aluminum] [stainless steel]; with beveled edge sized as required to hold insulation securely in place but not less than 1-1/2 inches in diameter.**

C. **Shop Application of Duct Liner: Comply with SMACNA's "HVAC Duct Construction Standards - Metal and Flexible," Figure 2-19, "Flexible Duct Liner Installation."**

1. **Adhere a single layer of indicated thickness of duct liner with at least 90 percent adhesive coverage at liner contact surface area. Attaining indicated thickness with multiple layers of duct liner is prohibited.**

2. **Apply adhesive to transverse edges of liner facing upstream that do not receive metal nosing.**

3. **Butt transverse joints without gaps, and coat joint with adhesive.**

4. **Fold and compress liner in corners of rectangular ducts or cut and fit to ensure butted-edge overlapping.**

5. **Do not apply liner in rectangular ducts with longitudinal joints, except at corners of ducts, unless duct size and dimensions of standard liner make longitudinal joints necessary.**

6. **Apply adhesive coating on longitudinal seams in ducts with air velocity of 2500 fpm.**

7. **Secure liner with mechanical fasteners 4 inches from corners and at intervals not exceeding 12 inches transversely; at 3 inches from transverse joints and at intervals not exceeding 18 inches longitudinally.**

8. **Secure transversely oriented liner edges facing the airstream with metal nosings that have either channel or "Z" profiles or are integrally formed from duct wall. Fabricate edge facings at the following locations:**

    a. ***Fan discharges.***

    b. ***Intervals of lined duct preceding unlined duct.***

    c. ***Upstream edges of transverse joints in ducts where air velocities are higher than 2500 fpm or where indicated.***

9. **Secure insulation between perforated sheet metal inner duct of same thickness as specified for outer shell. Use mechanical fasteners that maintain inner duct at uniform distance from outer shell without compressing insulation.**

a. ***Sheet Metal Inner Duct Perforations: 3/32-inch diameter, with an overall open area of 23 percent.***

10. **Terminate inner ducts with buildouts attached to fire-damper sleeves, dampers, turning vane assemblies, or other devices. Fabricated buildouts (metal hat sections) or other buildout means are optional; when used, secure buildouts to duct walls with bolts, screws, rivets, or welds.**

2.5 *SEALANT AND GASKETS*

A. **General Sealant and Gasket Requirements: Surface-burning characteristics for sealants and gaskets shall be a maximum flame-spread index of 25 and a maximum smoke-developed index of 50 when tested according to UL 723; certified by an NRTL.**

B. **Two-Part Tape Sealing System:**

1. **Tape: Woven cotton fiber impregnated with mineral gypsum and modified acrylic/silicone activator to react exothermically with tape to form hard, durable, airtight seal.**

2. **Tape Width: [**3 inches**] [**4 inches**] [**6 inches**].**

3. **Sealant: Modified styrene acrylic.**

4. **Water resistant.**

5. **Mold and mildew resistant.**

6. **Maximum Static-Pressure Class: 10-inch wg, positive and negative.**

7. **Service: Indoor and outdoor.**

8. **Service Temperature: Minus 40 to plus 200 deg F.**

9. **Substrate: Compatible with galvanized sheet steel (both PVC coated and bare), stainless steel, or aluminum.**

10. **For indoor applications, use sealant that has a VOC content of 250 g/L or less when calculated according to 40 CFR 59, Subpart D (EPA Method 24).**

C. **Water-Based Joint and Seam Sealant:**

1. **Application Method: Brush on.**

2. **Solids Content: Minimum 65 percent.**

3. **Shore A Hardness: Minimum 20.**

4. **Water resistant.**

5. **Mold and mildew resistant.**

6. **VOC: Maximum 75 g/L (less water).**

7. **Maximum Static-Pressure Class: 10-inch wg, positive and negative.**

8. **Service: Indoor or outdoor.**

9. **Substrate: Compatible with galvanized sheet steel (both PVC coated and bare), stainless steel, or aluminum sheets.**

D. **Flanged Joint Sealant: Comply with ASTM C 920.**

1. **General: Single-component, acid-curing, silicone, elastomeric.**

2. **Type: S.**

3. **Grade: NS.**

4. **Class: 25.**

5. **Use: O.**

6. **For indoor applications, use sealant that has a VOC content of 250 g/L or less when calculated according to 40 CFR 59, Subpart D (EPA Method 24).**

E. **Flange Gaskets: Butyl rubber, neoprene, or EPDM polymer with polyisobutylene plasticizer.**

F. **Round Duct Joint O-Ring Seals:**

1. **Seal shall provide maximum leakage class of 3 cfm/100 sq. ft. at 1-inch wg and shall be rated for 10-inch wg static-pressure class, positive or negative.**

2. **EPDM O-ring to seal in concave bead in coupling or fitting spigot.**

3. **Double-lipped, EPDM O-ring seal, mechanically fastened to factory-fabricated couplings and fitting spigots.**

2.6 *HANGERS AND SUPPORTS*

A. **Hanger Rods for Noncorrosive Environments: Cadmium-plated steel rods and nuts.**

B. **Hanger Rods for Corrosive Environments: Electrogalvanized, all-thread rods or galvanized rods with threads painted with zinc-chromate primer after installation.**

C. **Strap and Rod Sizes: Comply with SMACNA's "HVAC Duct Construction Standards - Metal and Flexible," Table 4-1, "Rectangular Duct Hangers Minimum Size," and Table 4-2, "Minimum Hanger Sizes for Round Duct."**

D. **Steel Cables for Galvanized-Steel Ducts: Galvanized steel complying with ASTM A 603.**

E. **Steel Cables for Stainless-Steel Ducts: Stainless steel complying with ASTM A 492.**

F. **Steel Cable End Connections: Cadmium-plated steel assemblies with brackets, swivel, and bolts designed for duct hanger service; with an automatic-locking and clamping device.**

G. **Duct Attachments: Sheet metal screws, blind rivets, or self-tapping metal screws; compatible with duct materials.**

H. **Trapeze and Riser Supports:**

1. **Supports for Galvanized-Steel Ducts: Galvanized-steel shapes and plates.**

2. **Supports for Stainless-Steel Ducts: Stainless-steel shapes and plates.**

3. **Supports for Aluminum Ducts: Aluminum or galvanized steel coated with zinc chromate.**

2.7 *SEISMIC-RESTRAINT DEVICES*

A. **Manufacturers: Subject to compliance with requirements, [provide products by one of the following] [available manufacturers offering products that may be incorporated into the Work include, but are not limited to, the following]:**

1. **Cooper B-Line, Inc.; a division of Cooper Industries.**

2. **Ductmate Industries, Inc.**

3. **Hilti Corp.**

4. **Kinetics Noise Control.**

5. **Loos & Co.; Cableware Division.**

6. **Mason Industries.**

7. **TOLCO; a brand of NIBCO INC.**

8. **Unistrut Corporation; Tyco International, Ltd.**

9. **<Insert manufacturer's name>.**

B. **General Requirements for Restraint Components: Rated strengths, features, and applications shall be as defined in reports by [an evaluation service member of the ICC Evaluation Service] [the Office of Statewide Health Planning and Development for the State of California] [an agency acceptable to authorities having jurisdiction].**

1. **Structural Safety Factor: Allowable strength in tension, shear, and pullout force of components shall be at least [four] <Insert number> times the maximum seismic forces to which they will be subjected.**

C. **Channel Support System: Shop- or field-fabricated support assembly made of slotted steel channels rated in tension, compression, and torsion forces and with accessories for attachment to braced component at one end and to building structure at the other end. Include matching components and corrosion-resistant coating.**

D. **Restraint Cables: [ASTM A 603, galvanized] [ASTM A 492, stainless]-steel cables with end connections made of cadmium-plated steel assemblies with brackets, swivel, and bolts designed for restraining cable service; and with an automatic-locking and clamping device or double-cable clips.**

E. **Hanger Rod Stiffener: [Steel tube or steel slotted-support-system sleeve with internally bolted connections] [Reinforcing steel angle clamped] to hanger rod.**

F. **Mechanical Anchor Bolts: Drilled-in and stud-wedge or female-wedge type. Select anchor bolts with strength required for anchor and as tested according to ASTM E 488.**

PART 3 - EXECUTION

3.1 *DUCT INSTALLATION*

A. **Drawing plans, schematics, and diagrams indicate general location and arrangement of duct system. Indicated duct locations, configurations, and arrangements were used to size ducts and calculate friction loss for air-handling equipment sizing and for other design considerations. Install duct systems as indicated unless deviations to layout are approved on Shop Drawings and Coordination Drawings.**

B. **Install ducts according to SMACNA's "HVAC Duct Construction Standards - Metal and Flexible" unless otherwise indicated.**

C. **Install round ducts in maximum practical lengths.**

D. **Install ducts with fewest possible joints.**

E. **Install factory- or shop-fabricated fittings for changes in direction, size, and shape and for branch connections.**

F. **Unless otherwise indicated, install ducts vertically and horizontally, and parallel and perpendicular to building lines.**

G. **Install ducts close to walls, overhead construction, columns, and other structural and permanent enclosure elements of building.**

H. **Install ducts with a clearance of 1 inch, plus allowance for insulation thickness.**

I. **Route ducts to avoid passing through transformer vaults and electrical equipment rooms and enclosures.**

J. **Where ducts pass through non-fire-rated interior partitions and exterior walls and are exposed to view, cover the opening between the partition and duct or duct insulation with sheet metal flanges of same metal thickness as the duct. Overlap openings on four sides by at least 1-1/2 inches.**

K. **Where ducts pass through fire-rated interior partitions and exterior walls, install fire dampers. Comply with requirements in Division 23 Section "Air Duct Accessories" for fire and smoke dampers.**

L. **Protect duct interiors from moisture, construction debris and dust, and other foreign materials.[Comply with SMACNA's "Duct Cleanliness for New Construction Guidelines."]**

3.2 *INSTALLATION OF EXPOSED DUCTWORK*

A. **Protect ducts exposed in finished spaces from being dented, scratched, or damaged.**

B. **Trim duct sealants flush with metal. Create a smooth and uniform exposed bead. Do not use two-part tape sealing system.**

C. **Grind welds to provide smooth surface free of burrs, sharp edges, and weld splatter. When welding stainless steel with a No. 3 or 4 finish, grind the welds flush, polish the exposed welds, and treat the welds to remove discoloration caused by welding.**

D. **Maintain consistency, symmetry, and uniformity in the arrangement and fabrication of fittings, hangers and supports, duct accessories, and air outlets.**

E. **Repair or replace damaged sections and finished work that does not comply with these requirements.**

3.3 *ADDITIONAL INSTALLATION REQUIREMENTS FOR COMMERCIAL KITCHEN HOOD EXHAUST DUCT*

A. **Install commercial kitchen hood exhaust ducts without dips and traps that may hold grease, and sloped a minimum of 2 percent to drain grease back to the hood.**

B. **Install fire-rated access panel assemblies at each change in direction and at maximum intervals of [**20 feet**] [**12 feet**] <Insert dimension> in horizontal ducts, and at every floor for vertical ducts, or as indicated on Drawings. Locate access panel on top or sides of duct a minimum of 1-1/2 inches from bottom of duct.**

C. **Do not penetrate fire-rated assemblies except as allowed by applicable building codes and authorities having jurisdiction.**

3.4 *DUCT SEALING*

A. **Seal ducts for duct static-pressure, seal classes, and leakage classes specified in "Duct Schedule" Article according to SMACNA's "HVAC Duct Construction Standards - Metal and Flexible."**

B. **Seal ducts to the following seal classes according to SMACNA's "HVAC Duct Construction Standards - Metal and Flexible":**

1. **Comply with SMACNA's "HVAC Duct Construction Standards - Metal and Flexible."**

2. **Outdoor, Supply-Air Ducts: Seal Class A.**

3. **Outdoor, Exhaust Ducts: Seal Class C.**

4. **Outdoor, Return-Air Ducts: Seal Class C.**

5. **Unconditioned Space, Supply-Air Ducts in Pressure Classes 2-Inch wg and Lower: Seal Class B.**

6. **Unconditioned Space, Supply-Air Ducts in Pressure Classes Higher Than 2-Inch wg: Seal Class A.**

7. **Unconditioned Space, Exhaust Ducts: Seal Class C.**

8. **Unconditioned Space, Return-Air Ducts: Seal Class B.**

9. **Conditioned Space, Supply-Air Ducts in Pressure Classes 2-Inch wg and Lower: Seal Class C.**

10. **Conditioned Space, Supply-Air Ducts in Pressure Classes Higher Than 2-Inch wg: Seal Class B.**

11. **Conditioned Space, Exhaust Ducts: Seal Class B.**

12. **Conditioned Space, Return-Air Ducts: Seal Class C.**

3.5 *HANGER AND SUPPORT INSTALLATION*

A. **Comply with SMACNA's "HVAC Duct Construction Standards - Metal and Flexible," Chapter 4, "Hangers and Supports."**

B. **Building Attachments: Concrete inserts, powder-actuated fasteners, or structural-steel fasteners appropriate for construction materials to which hangers are being attached.**

1. **Where practical, install concrete inserts before placing concrete.**

2. **Install powder-actuated concrete fasteners after concrete is placed and completely cured.**

3. **Use powder-actuated concrete fasteners for standard-weight aggregate concretes or for slabs more than 4 inches thick.**

4. **Do not use powder-actuated concrete fasteners for lightweight-aggregate concretes or for slabs less than 4 inches thick.**

5. **Do not use powder-actuated concrete fasteners for seismic restraints.**

C. **Hanger Spacing: Comply with SMACNA's "HVAC Duct Construction Standards - Metal and Flexible," Table 4-1, "Rectangular Duct Hangers Minimum Size," and Table 4-2, "Minimum Hanger Sizes for Round Duct," for maximum hanger spacing; install hangers and supports within 24 inches of each elbow and within 48 inches of each branch intersection.**

D. **Hangers Exposed to View: Threaded rod and angle or channel supports.**

E. **Support vertical ducts with steel angles or channel secured to the sides of the duct with welds, bolts, sheet metal screws, or blind rivets; support at each floor and at a maximum intervals of 16 feet.**

F. **Install upper attachments to structures. Select and size upper attachments with pull-out, tension, and shear capacities appropriate for supported loads and building materials where used.**

3.6 *SEISMIC-RESTRAINT-DEVICE INSTALLATION*

A. **Install ducts with hangers and braces designed to support the duct and to restrain against seismic forces required by applicable building codes. Comply with [SMACNA's "Seismic Restraint Manual: Guidelines for Mechanical Systems."] [ASCE/SEI 7.]**

1. **Space lateral supports a maximum of [**40 feet**] <Insert dimension> o.c., and longitudinal supports a maximum of [**80 feet**] <Insert dimension> o.c.**

2. **Brace a change of direction longer than 12 feet.**

B. **Select seismic-restraint devices with capacities adequate to carry present and future static and seismic loads.**

C. **Install cables so they do not bend across edges of adjacent equipment or building structure.**

D. **Install cable restraints on ducts that are suspended with vibration isolators.**

E. **Install seismic-restraint devices using methods approved by [an evaluation service member of the ICC Evaluation Service] [the Office of Statewide Health Planning and Development for the State of California] [an agency acceptable to authorities having jurisdiction].**

F. **Attachment to Structure: If specific attachment is not indicated, anchor bracing and restraints to structure, to flanges of beams, to upper truss chords of bar joists, or to concrete members.**

G. **Drilling for and Setting Anchors:**

1. **Identify position of reinforcing steel and other embedded items prior to drilling holes for anchors. Do not damage existing reinforcement or embedded items during drilling. Notify the Architect if reinforcing steel or other embedded items are encountered during drilling. Locate and avoid prestressed tendons, electrical and telecommunications conduit, and gas lines.**

2. **Do not drill holes in concrete or masonry until concrete, mortar, or grout has achieved full design strength.**

3. **Wedge Anchors: Protect threads from damage during anchor installation. Heavy-duty sleeve anchors shall be installed with sleeve fully engaged in the structural element to which anchor is to be fastened.**

4. **Set anchors to manufacturer's recommended torque, using a torque wrench.**

5. **Install zinc-coated steel anchors for interior applications and stainless-steel anchors for applications exposed to weather.**

3.7 *CONNECTIONS*

A. **Make connections to equipment with flexible connectors complying with Division 23 Section "Air Duct Accessories."**

B. **Comply with SMACNA's "HVAC Duct Construction Standards - Metal and Flexible" for branch, outlet and inlet, and terminal unit connections.**

3.8 *DUCT CLEANING*

A. **Clean [new] [existing] [new and existing] duct system(s) before testing, adjusting, and balancing.**

B. **Use service openings for entry and inspection.**

1. **Create new openings and install access panels appropriate for duct static-pressure class if required for cleaning access. Provide insulated panels for insulated or lined duct. Patch insulation and liner as recommended by duct liner manufacturer. Comply with Division 23 Section "Air Duct Accessories" for access panels and doors.**

2. **Disconnect and reconnect flexible ducts as needed for cleaning and inspection.**

3. **Remove and reinstall ceiling to gain access during the cleaning process.**

C. **Particulate Collection and Odor Control:**

1. **When venting vacuuming system inside the building, use HEPA filtration with 99.97 percent collection efficiency for 0.3-micron-size (or larger) particles.**

2. **When venting vacuuming system to outdoors, use filter to collect debris removed from HVAC system, and locate exhaust downwind and away from air intakes and other points of entry into building.**

D. **Clean the following components by removing surface contaminants and deposits:**

1. **Air outlets and inlets (registers, grilles, and diffusers).**

2. **Supply, return, and exhaust fans including fan housings, plenums (except ceiling supply and return plenums), scrolls, blades or vanes, shafts, baffles, dampers, and drive assemblies.**

3. **Air-handling unit internal surfaces and components including mixing box, coil section, air wash systems, spray eliminators, condensate drain pans, humidifiers and dehumidifiers, filters and filter sections, and condensate collectors and drains.**

4. **Coils and related components.**

5. **Return-air ducts, dampers, actuators, and turning vanes except in ceiling plenums and mechanical equipment rooms.**

6. **Supply-air ducts, dampers, actuators, and turning vanes.**

7. **Dedicated exhaust and ventilation components and makeup air systems.**

E. **Mechanical Cleaning Methodology:**

1. **Clean metal duct systems using mechanical cleaning methods that extract contaminants from within duct systems and remove contaminants from building.**

2. **Use vacuum-collection devices that are operated continuously during cleaning. Connect vacuum device to downstream end of duct sections so areas being cleaned are under negative pressure.**

3. **Use mechanical agitation to dislodge debris adhered to interior duct surfaces without damaging integrity of metal ducts, duct liner, or duct accessories.**

4. **Clean fibrous-glass duct liner with HEPA vacuuming equipment; do not permit duct liner to get wet. Replace fibrous-glass duct liner that is damaged, deteriorated, or delaminated or that has friable material, mold, or fungus growth.**

5. **Clean coils and coil drain pans according to NADCA 1992. Keep drain pan operational. Rinse coils with clean water to remove latent residues and cleaning materials; comb and straighten fins.**

6. **Provide drainage and cleanup for wash-down procedures.**

7. **Antimicrobial Agents and Coatings: Apply EPA-registered antimicrobial agents if fungus is present. Apply antimicrobial agents according to manufacturer's written instructions after removal of surface deposits and debris.**

3.9 *START UP*

A. **Air Balance: Comply with requirements in Division 23 Section "Testing, Adjusting, and Balancing for HVAC."**

3.10 *DUCT SCHEDULE*

A. **Fabricate ducts with galvanized sheet steel except as otherwise indicated and as follows:**

1. **Underground Ducts: Concrete-encased, [galvanized sheet steel] [PVC-coated, galvanized sheet steel with thicker coating on duct exterior] [stainless steel].**

2. **<Insert requirements>.**

B. **Supply Ducts:**

1. **Ducts Connected to Fan Coil Units, Furnaces, Heat Pumps, and Terminal Units <Insert equipment>:**

a. ***Pressure Class: Positive [****1-inch wg****] [****2-inch wg****] <Insert value>.***

b. ***Minimum SMACNA Seal Class: [A] [B] [C].***

c. ***SMACNA Leakage Class for Rectangular: [12] [24] <Insert value>.***

d. ***SMACNA Leakage Class for Round and Flat Oval: [12] [24] <Insert value>.***

2. **Ducts Connected to Constant-Volume Air-Handling Units <Insert equipment>:**

a. ***Pressure Class: Positive [****2-inch wg****] [****3-inch wg****] <Insert value>.***

b. ***Minimum SMACNA Seal Class: [A] [B].***

c. ***SMACNA Leakage Class for Rectangular: [6] [12] [24] <Insert value>.***

d. ***SMACNA Leakage Class for Round and Flat Oval: [6] [12] [24] <Insert value>.***

3. **Ducts Connected to Variable-Air-Volume Air-Handling Units <Insert equipment>:**

a. ***Pressure Class: Positive [****3-inch wg****] [****4-inch wg****] <Insert value>.***

b. ***Minimum SMACNA Seal Class: [A] [B].***

c. ***SMACNA Leakage Class for Rectangular: [3] [6] <Insert value>.***

d. ***SMACNA Leakage Class for Round and Flat Oval: [3] [6] <Insert value>.***

4. **Ducts Connected to Equipment Not Listed Above:**

a. ***Pressure Class: Positive [****2-inch wg****] [****3-inch wg****] [****4-inch wg****] <Insert value>.***

b. ***Minimum SMACNA Seal Class: [A] [B].***

c. ***SMACNA Leakage Class for Rectangular: [3] [6] [12] <Insert value>.***

d. ***SMACNA Leakage Class for Round and Flat Oval: [3] [6] [12] <Insert value>.***

C. **Return Ducts:**

1. **Ducts Connected to Fan Coil Units, Furnaces, Heat Pumps, and Terminal Units <Insert equipment>:**

a. ***Pressure Class: Positive or negative [****1-inch wg****] [****2-inch wg****] <Insert value>.***

b. ***Minimum SMACNA Seal Class: [A] [B] [C].***

c. ***SMACNA Leakage Class for Rectangular: [12] [24] <Insert value>.***

d. ***SMACNA Leakage Class for Round and Flat Oval: [12] [24] <Insert value>.***

2. **Ducts Connected to Air-Handling Units <Insert equipment>:**

a. ***Pressure Class: Positive or negative [****2-inch wg****] [****3-inch wg****] <Insert value>.***

b. ***Minimum SMACNA Seal Class: [A] [B].***

c. ***SMACNA Leakage Class for Rectangular: [6] [12] [24] <Insert value>.***

d. ***SMACNA Leakage Class for Round and Flat Oval: [6] [12] [24] <Insert value>.***

3. **Ducts Connected to Equipment Not Listed Above:**

a. ***Pressure Class: Positive or negative [****2-inch wg****] [****3-inch wg****] [****4-inch wg****] <Insert value>.***

b. ***Minimum SMACNA Seal Class: [A] [B].***

c. ***SMACNA Leakage Class for Rectangular: [3] [6] [12] <Insert value>.***

d. ***SMACNA Leakage Class for Round and Flat Oval: [3] [6] [12] <Insert value>.***

D. **Exhaust Ducts:**

1. **Ducts Connected to Fans Exhausting (ASHRAE 62.1, Class 1 and 2) Air:**

a. ***Pressure Class: Negative [****1-inch wg****] [****2-inch wg****] [****3-inch wg****] <Insert value>.***

b. ***Minimum SMACNA Seal Class: [A] [B] [C] if negative pressure, and A if positive pressure.***

c. ***SMACNA Leakage Class for Rectangular: [12] [24] <Insert value>.***

d. ***SMACNA Leakage Class for Round and Flat Oval: [6] [12] [24] <Insert value>.***

2. **Ducts Connected to Air-Handling Units <Insert equipment>:**

a. ***Pressure Class: Positive or negative [****2-inch wg****] [****3-inch wg****] <Insert value>.***

b. ***Minimum SMACNA Seal Class: [A] [B] if negative pressure, and A if positive pressure.***

c. ***SMACNA Leakage Class for Rectangular: [6] [12] [24] <Insert value>.***

d. ***SMACNA Leakage Class for Round and Flat Oval: [3] [6] [12] [24] <Insert value>.***

3. **Ducts Connected to Commercial Kitchen Hoods: Comply with NFPA 96.**

a. ***Exposed to View: Type 304, stainless-steel sheet, [No. 4] [No. 3] <Insert finish> finish.***

b. ***Concealed: [Type 304, stainless-steel sheet, No. 2D finish] [Carbon-steel sheet].***

c. ***Welded seams and joints.***

d. ***Pressure Class: Positive or negative [****2-inch wg****] [****3-inch wg****] [****4-inch wg****] <Insert value>.***

e. ***Minimum SMACNA Seal Class: Welded seams, joints, and penetrations.***

f. ***SMACNA Leakage Class: 3.***

4. **Ducts Connected to Dishwasher Hoods:**

a. ***Type 304, stainless-steel sheet.***

b. ***Exposed to View: [No. 4] [No. 3] <Insert finish> finish.***

c. ***Concealed: [No. 2D] <Insert finish> finish.***

d. ***Welded seams and flanged joints with watertight EPDM gaskets.***

e. ***Pressure Class: Positive or negative [****2-inch wg****] [****3-inch wg****] <Insert value>.***

f. ***Minimum SMACNA Seal Class: Welded seams, joints, and penetrations.***

g. ***SMACNA Leakage Class: 3.***

5. **Ducts Connected to Fans Exhausting Laboratory and Process (ASHRAE 62.1, Class 3 and 4) Air:**

a. ***[Type 316] [Type 304], stainless-steel sheet.***

1) **Exposed to View: [No. 4] [No. 3] <Insert finish> finish.**

2) **Concealed: [No. 2B] [No. 2D] <Insert finish> finish.**

b. ***PVC-coated, galvanized sheet steel with thicker coating on duct interior.***

c. ***Pressure Class: Positive or negative [****3-inch wg****] [****4-inch wg****] [****6-inch wg****] <Insert value>.***

d. ***Minimum SMACNA Seal Class: [A] [Welded seams, joints, and penetrations].***

e. ***SMACNA Leakage Class: 3.***

6. **Ducts Connected to Equipment Not Listed Above:**

a. ***Pressure Class: Positive or negative [****2-inch wg****] [****3-inch wg****] [****4-inch wg****] <Insert value>.***

b. ***Minimum SMACNA Seal Class: [A] [B] if negative pressure, and A if positive pressure.***

c. ***SMACNA Leakage Class for Rectangular: [6] [12] [24] <Insert value>.***

d. ***SMACNA Leakage Class for Round and Flat Oval: [3] [6] [12] [24] <Insert value>.***

E. **Outdoor-Air (Not Filtered, Heated, or Cooled) Ducts:**

1. **Ducts Connected to Fan Coil Units, Furnaces, Heat Pumps, and Terminal Units <Insert equipment>:**

a. ***Pressure Class: Positive or negative [****1-inch wg****] [****2-inch wg****] <Insert value>.***

b. ***Minimum SMACNA Seal Class: [A] [B] [C].***

c. ***SMACNA Leakage Class for Rectangular: [12] [24] <Insert value>.***

d. ***SMACNA Leakage Class for Round and Flat Oval: [6] [12] [24] <Insert value>.***

2. **Ducts Connected to Air-Handling Units <Insert equipment>:**

a. ***Pressure Class: Positive or negative [****2-inch wg****] [****3-inch wg****] <Insert value>.***

b. ***Minimum SMACNA Seal Class: [A] [B].***

c. ***SMACNA Leakage Class for Rectangular: [6] [12] [24] <Insert value>.***

d. ***SMACNA Leakage Class for Round and Flat Oval: [3] [6] [12] [24] <Insert value>.***

3. **Ducts Connected to Equipment Not Listed Above:**

a. ***Pressure Class: Positive or negative [****2-inch wg****] [****3-inch wg****] [****4-inch wg****] <Insert value>.***

b. ***Minimum SMACNA Seal Class: [A] [B].***

c. ***SMACNA Leakage Class for Rectangular: [3] [6] [12] <Insert value>.***

d. ***SMACNA Leakage Class for Round and Flat Oval: [3] [6] [12] <Insert value>.***

F. **Intermediate Reinforcement:**

1. **Galvanized-Steel Ducts: [Galvanized steel] [Carbon steel coated with zinc-chromate primer] [Galvanized steel or carbon steel coated with zinc-chromate primer].**

2. **PVC-Coated Ducts:**

   a. ***Exposed to Airstream: Match duct material.***

   b. ***Not Exposed to Airstream: [Galvanized] [Match duct material].***

3. **Stainless-Steel Ducts:**

   a. ***Exposed to Airstream: Match duct material.***

   b. ***Not Exposed to Airstream: [Galvanized] [Match duct material].***

4. **Aluminum Ducts: [Aluminum][or galvanized sheet steel coated with zinc chromate].**

G. **Liner:**

1. **Supply Air Ducts: Fibrous glass, Type I, [**1 inch**] [**1-1/2 inches**] [**2 inches**] <Insert thickness> thick.**

2. **Return Air Ducts: Fibrous glass, Type I, [**1 inch**] [**1-1/2 inches**] [**2 inches**] <Insert thickness> thick.**

3. **Exhaust Air Ducts: Fibrous glass, Type I, [**1 inch**] <Insert thickness> thick.**

4. **Supply Fan Plenums: Fibrous glass, Type II, [**1 inch**] [**1-1/2 inches**] [**2 inches**] <Insert thickness> thick.**

5. **Return- and Exhaust-Fan Plenums: Fibrous glass, Type II, [**2 inches**] <Insert thickness> thick.**

6. **Transfer Ducts: Fibrous glass, Type I, [**1 inch**] [**1-1/2 inches**] [**2 inches**] <Insert thickness> thick.**

H. **Elbow Configuration:**

1. **Rectangular Duct: Comply with SMACNA's "HVAC Duct Construction Standards - Metal and Flexible," Figure 2-2, "Rectangular Elbows."**

a. ***Velocity 1000 fpm or Lower:***

1) **Radius Type RE 1 with minimum 0.5 radius-to-diameter ratio.**

2) **Mitered Type RE 4 without vanes.**

b. ***Velocity 1000 to 1500 fpm:***

1) **Radius Type RE 1 with minimum 1.0 radius-to-diameter ratio.**

2) **Radius Type RE 3 with minimum 0.5 radius-to-diameter ratio and two vanes.**

3) **Mitered Type RE 2 with vanes complying with SMACNA's "HVAC Duct Construction Standards - Metal and Flexible," Figure 2-3, "Vanes and Vane Runners," and Figure 2-4, "Vane Support in Elbows."**

c. ***Velocity 1500 fpm or Higher:***

1) **Radius Type RE 1 with minimum 1.5 radius-to-diameter ratio.**

2) **Radius Type RE 3 with minimum 1.0 radius-to-diameter ratio and two vanes.**

3) **Mitered Type RE 2 with vanes complying with SMACNA's "HVAC Duct Construction Standards - Metal and Flexible," Figure 2-3, "Vanes and Vane Runners," and Figure 2-4, "Vane Support in Elbows."**

2. **Rectangular Duct: Comply with SMACNA's "HVAC Duct Construction Standards - Metal and Flexible," Figure 2-2, "Rectangular Elbows."**

a. ***Radius Type RE 1 with minimum 1.5 radius-to-diameter ratio.***

b. ***Radius Type RE 3 with minimum 1.0 radius-to-diameter ratio and two vanes.***

c. ***Mitered Type RE 2 with vanes complying with SMACNA's "HVAC Duct Construction Standards - Metal and Flexible," Figure 2-3, "Vanes and Vane Runners," and Figure 2-4, "Vane Support in Elbows."***

3. **Round Duct: Comply with SMACNA's "HVAC Duct Construction Standards - Metal and Flexible," Figure 3-3, "Round Duct Elbows."**

a. ***Minimum Radius-to-Diameter Ratio and Elbow Segments: Comply with SMACNA's "HVAC Duct Construction Standards - Metal and Flexible," Table 3-1, "Mitered Elbows." Elbows with less than 90-degree change of direction have proportionately fewer segments.***

1) **Velocity 1000 fpm or Lower: 0.5 radius-to-diameter ratio and three segments for 90-degree elbow.**

2) **Velocity 1000 to 1500 fpm: 1.0 radius-to-diameter ratio and four segments for 90-degree elbow.**

3) **Velocity 1500 fpm or Higher: 1.5 radius-to-diameter ratio and five segments for 90-degree elbow.**

4) **Radius-to Diameter Ratio: 1.5.**

b. ***Round Elbows, [12 Inches] <Insert dimension> and Smaller in Diameter: Stamped or pleated.***

c. ***Round Elbows, [14 Inches] <Insert dimension> and Larger in Diameter: [Standing seam] [Welded].***

I. **Branch Configuration:**

1. **Rectangular Duct: Comply with SMACNA's "HVAC Duct Construction Standards - Metal and Flexible," Figure 2-6, "Branch Connections."**

a. ***Rectangular Main to Rectangular Branch: 45-degree entry.***

b. ***Rectangular Main to Round Branch: Spin in.***

2. **Round: Comply with SMACNA's "HVAC Duct Construction Standards - Metal and Flexible," Figure 3-4, "90 Degree Tees and Laterals," and Figure 3-5, "Conical Tees." Saddle taps are permitted in existing duct.**

   a. ***Velocity 1000 fpm or Lower: 90-degree tap.***

   b. ***Velocity 1000 to 1500 fpm: Conical tap.***

   c. ***Velocity 1500 fpm or Higher: 45-degree lateral.***

END OF SECTION 233113

SECTION 233116 - NONMETAL DUCTS

PART 1 - GENERAL

1.1 *SUMMARY*

A. Section Includes:

1. Fibrous-glass ducts and fittings.

2. Phenolic-foam ducts and fittings.

B. Related Sections:

1. Division 23 Section "Testing, Adjusting, and Balancing for HVAC" for testing, adjusting, and balancing requirements for nonmetal ducts.

2. Division 23 Section "Metal Ducts" for single- and double-wall, rectangular and round ducts.

3. Division 23 Section "HVAC Casings" for factory- and field-fabricated casings for mechanical equipment.

4. Division 23 Section "Air Duct Accessories" for dampers, duct-mounting access doors and panels, turning vanes, and flexible ducts.

1.2 *PERFORMANCE REQUIREMENTS*

A. Airstream Surfaces: Surfaces in contact with the airstream shall comply with requirements in ASHRAE 62.1-2004.

1.3 *SUBMITTALS*

A. Product Data: For each type of product indicated.

B. LEED Submittals:

1. Product Data for Prerequisite EQ 1: Documentation indicating that duct systems comply with ASHRAE 62.1-2004, Section 5 - "Systems and Equipment."

2. Product Data for Prerequisite EA 2: Documentation indicating that duct systems comply with ASHRAE/IESNA 90.1-2004, Section 6.4.4 - "HVAC System Construction and Insulation."

3. Duct-Cleaning Test Report for Prerequisite EQ 1: Documentation of work performed for compliance with ASHRAE 62.1-2004, Section 7.2.4 - "Ventilation System Start-Up."

4. Product Data for Credit EQ 4.1: For adhesives and sealants, including printed statement of VOC content.

C. Shop Drawings:

1. Fabrication, assembly, and installation, including plans, elevations, sections, components, and attachments to other work.

2. Duct layout indicating sizes and pressure classes.

3. Elevation of top of ducts.

4. Dimensions of main duct runs from building grid lines.

5. Fittings.

6. Reinforcement and spacing.

7. Seam and joint construction.

8. Penetrations through fire-rated and other partitions.

9. Equipment installation based on equipment being used on Project.

10. Hangers and supports, including methods for duct and building attachment and vibration isolation.

D. Coordination Drawings: Plans, drawn to scale, on which the following items are shown and co-ordinated with each other, using input from installers of the items involved:

1. Duct installation in congested spaces, indicating coordination with general construction, building components, and other building services. Indicate proposed changes to duct layout.

2. Suspended ceiling components.

3. Structural members to which duct will be attached.

4. Size and location of initial access modules for acoustical tile.

5. Penetrations of smoke barriers and fire-rated construction.

6. Items penetrating finished ceiling including the following:

a. *Lighting fixtures.*

b. *Air outlets and inlets.*

c. *Speakers.*

d. *Sprinklers.*

e. *Access panels.*

f. *Perimeter moldings.*

1.4 *QUALITY ASSURANCE*

A. ASHRAE Compliance: Applicable requirements in ASHRAE 62.1-2004, Section 5 - "Systems and Equipment" and Section 7 - "Construction and System Start-Up."

B. ASHRAE/IESNA Compliance: Applicable requirements in ASHRAE/IESNA 90.1-2004, Section 6.4.4 - "HVAC System Construction and Insulation."

C. NFPA Compliance:

1. NFPA 90A, "Installation of Air Conditioning and Ventilating Systems."

2. NFPA 90B, "Installation of Warm Air Heating and Air Conditioning Systems."

PART 2 - PRODUCTS

1. FIBROUS-GLASS DUCTS AND FITTINGS

B. Manufacturers: Subject to compliance with requirements, [provide products by one of the following] [available manufacturers offering products that may be incorporated into the Work include, but are not limited to, the following]:

1. CertainTeed Corporation; Insulation Group.

2. Johns Manville.

3. Knauf Insulation.

4. Owens Corning.

C. Fibrous-Glass Duct Materials: Resin-bonded fiberglass, faced on the outside surface with fire-resistive FSK vapor retarder and with a smooth fiberglass mat finish on the air-side surface.

1. Duct Board: Factory molded into rectangular boards.

2. Round Duct: Factory molded into straight round duct and smooth fittings.

3. Temperature Limits: 40 to 250 deg F inside ducts; 150 deg F ambient temperature surrounding ducts.

4. Maximum Thermal Conductivity: 0.24 Btu x in./h x sq. ft. x deg F at 75 deg F mean temperature.

5. Moisture Absorption: Not exceeding 5 percent by weight at 120 deg F and 95 percent relative humidity for 96 hours when tested according to ASTM C 1104/C 1104M.

6. Permeability: 0.02 perms maximum when tested according to ASTM E 96/E 96M, Procedure A.

7. Antimicrobial Agent: Compound shall be tested for efficacy by an NRTL, and registered by the EPA for use in HVAC systems.

8. Noise-Reduction Coefficient: 0.65 minimum when tested according to ASTM C 423, Mounting A.

9. Required Markings: EI rating, UL label, and other markings required by UL 181 on each full sheet of duct board.

D. Closure Materials:

1. Pressure-Sensitive Tape: Comply with UL 181A; imprinted by the manufacturer with the coding "181A-P," the manufacturer's name, and a date code.

   a. *Tape: Aluminum foil-scrim tape imprinted with listing information.*

   b. *Minimum Tape Width: 2-1/2 inches; 3 inches for duct board thicker than 1 inch.*

   c. *Staples: 1/2-inch outward clinching, 2 inches o.c. in tabs, one tab per joint.*

   d. *Water resistant.*

   e. *Mold and mildew resistant.*

2. Heat-Activated Tape: Comply with UL 181A; imprinted by the manufacturer with the coding "181A-H," the manufacturer's name, and a date code.

   a. *Tape: Aluminum foil-scrim tape imprinted with listing information.*

   b. *Minimum Tape Width: 3 inches.*

   c. *Heat-Sensitive Imprint: Printed indicator on tape to show proper heating during application has been achieved.*

   d. *Water resistant.*

   e. *Mold and mildew resistant.*

3. Two-Part Tape Sealing System: Comply with UL 181A; imprinted by the manufacturer with the coding "181A-M," the manufacturer's name, and a date code.

   a. *Tape: Woven glass fiber impregnated with mineral gypsum.*

   b. *Minimum Tape Width: 3 inches.*

   c. *Sealant: Modified styrene acrylic.*

   d. *Water resistant.*

   e. *Mold and mildew resistant.*

   f. *For indoor applications, use sealant that has a VOC content of 250 g/L or less when calculated according to 40 CFR 59, Subpart D (EPA Method 24).*

E. Fabrication:

1. Select joints, seams, transitions, elbows, and branch connections and fabricate according to SMACNA's "Fibrous Glass Duct Construction Standards," Chapter 2, "Specifications and Closure," and Chapter 4, "Fittings and Connections."

2. Fabricate 90-degree mitered elbows to include turning vanes.

3. Reinforcements: Comply with requirements in SMACNA's "Fibrous Glass Duct Construction Standards," Chapter 5, "Reinforcement".

4. Preformed Round Duct: Comply with NAIMA AH116, "Fibrous Glass Duct Construction Standards," Section VII, "Preformed Round Duct."

2.2 *PHENOLIC-FOAM DUCTS AND FITTINGS*

A. Manufacturers: Subject to compliance with requirements, available manufacturers offering products that may be incorporated into the Work include, but are not limited to, the following:

1. Knauf Insulation.

B. Duct Panel: CFC-free phenolic-foam bonded on both sides with factory-applied 0.001-inch-thick, aluminum foil reinforced with fiberglass scrim.

1. Maximum Temperature: 158 deg F inside ducts or ambient temperature surrounding ducts.

2. Maximum Thermal Conductivity: 0.13 Btu x in./h x sq. ft. x deg F at 75 deg F mean temperature.

3. Permeability: 0.0002 perms maximum when tested according to ASTM E 96/E 96M, Procedure A.

4. Antimicrobial Agent: Compound shall be tested for efficacy by an NRTL, and registered by the EPA for use in HVAC systems.

5. Noise-Reduction Coefficient: 0.65 minimum when tested according to ASTM C 423, Mounting A.

6. Required Markings: UL label and other markings required by UL 181 on each full sheet of duct panel; UL ratings for closure materials.

C. Closure Materials:

1. V-Groove Adhesive: Silicone.

a. *For indoor applications, use sealant that has a VOC content of 250 g/L or less when calculated according to 40 CFR 59, Subpart D (EPA Method 24).*

2. Pressure-Sensitive Tape: Comply with UL 181A; imprinted by the manufacturer with the coding "181A-P," the manufacturer's name, and a date code.

a. *Tape: Aluminum foil tape imprinted with listing information.*

b. *Minimum Tape Width: 3 inches.*

c. *Water resistant.*

d. *Mold and mildew resistant.*

3. Polymeric Sealing System:

a. *Structural Membrane: Woven glass fiber.*

b. *Minimum Tape Width: 3 inches.*

c. *Sealant: Water based.*

d. *Color: White.*

e. *Water resistant.*

f. *Mold and mildew resistant.*

g. *For indoor applications, use sealant that has a VOC content of 250 g/L or less when calculated according to 40 CFR 59, Subpart D (EPA Method 24).*

D. Fabrication:

1. Fabricate joints, seams, transitions, reinforcement, elbows, branch connections, access doors and panels, and damage repairs according to Knauf Insulation's "Knauf KoolDuct System Design Guide," Section 4, "Duct Construction," and Section 5, "Ductwork System General."

2. Fabricate 90-degree mitered elbows to include turning vanes.

2.3 *HANGERS AND SUPPORTS*

A. Hanger Rods for Noncorrosive Environments: Cadmium-plated steel rods and nuts.

B. Hanger Rods for Corrosive Environments: Electrogalvanized, all-thread rods or galvanized rods with threads painted with zinc-chromate primer after installation.

C. Strap and Rod Sizes: Comply with SMACNA's "HVAC Duct Construction Standards - Metal and Flexible," Table 4-1, "Rectangular Duct Hangers Minimum Size," and Table 4-2, "Minimum Hanger Sizes for Round Duct."

D. Steel Cables: ASTM A 603, galvanized steel with end connections made of cadmium-plated steel assemblies with brackets, swivel, and bolts designed for duct hanger service; with an automatic-locking and clamping device.

E. Duct Attachments: Sheet metal screws, blind rivets, or self-tapping metal screws; compatible with duct materials.

F. Trapeze and Riser Supports: Steel shapes complying with ASTM A 36/A 36M.

PART 3 - EXECUTION

3.1 *DUCT INSTALLATION*

A. Install ducts with fewest possible joints.

B. Unless otherwise indicated, install ducts vertically and horizontally, and parallel and perpendicular to building lines.

C. Install ducts close to walls, overhead construction, columns, and other structural and permanent enclosure elements of building.

D. Install ducts with a clearance of 1 inch, plus allowance for insulation thickness.

E. Where ducts pass through non-fire-rated interior partitions and exterior walls and are exposed to view, cover the opening between the partition and duct or duct insulation with sheet metal flanges. Overlap openings on four sides by at least 1-1/2 inches.

F. Where ducts pass through fire-rated interior partitions and exterior walls, install fire dampers. Comply with requirements in Division 23 Section "Air Duct Accessories" for fire and smoke dampers.

G. Protect duct interiors from the moisture, construction debris and dust, and other foreign materials. Comply with SMACNA's "Duct Cleanliness for New Construction Guidelines."

H. Install fibrous-glass ducts and fittings to comply with SMACNA's "Fibrous Glass Duct Construction Standards."

I. Install foam ducts and fittings to comply with Knauf Insulation's "Knauf KoolDuct System Design Guide."

3.2 *HANGER AND SUPPORT INSTALLATION*

A. Install hangers and supports for fibrous-glass ducts and fittings to comply with SMACNA's "Fibrous Glass Duct Construction Standards," Chapter 6, "Hangers and Supports."

B. Install hangers and supports for phenolic-foam ducts and fittings to comply with Knauf Insulation's "Knauf KoolDuct System Design Guide," Section 5, "Ductwork System General."

C. Building Attachments: Concrete inserts, powder-actuated fasteners, or structural-steel fasteners appropriate for construction materials to which hangers are being attached.

1. Install concrete inserts before placing concrete.

2. Install powder-actuated concrete fasteners after concrete is placed and completely cured.

3. Use powder-actuated concrete fasteners for standard-weight aggregate concretes or for slabs more than 4 inches thick.

4. Do not use powder-actuated concrete fasteners for lightweight-aggregate concretes or for slabs less than 4 inches thick.

D. Install upper attachments to structures. Select and size upper attachments with pull-out, tension, and shear capacities appropriate for supported loads and building materials where used.

3.3 *DUCT CLEANING*

A. Clean new and existing duct system(s) before testing, adjusting, and balancing.

B. Use service openings for entry and inspection.

1. Create new openings and install access panels appropriate for duct static-pressure class if required for cleaning access. Provide insulated panels for insulated or lined duct. Patch duct as recommended by duct manufacturer. Comply with Division 23 Section "Air Duct Accessories" for access panels and doors.

2. Disconnect and reconnect flexible ducts as needed for cleaning and inspection.

3. Remove and reinstall ceiling to gain access during the cleaning process.

C. Particulate Collection and Odor Control:

1. When venting vacuuming system inside the building, use HEPA filtration with 99.97 percent collection efficiency for 0.3-micron-size (or larger) particles.

2. When venting vacuuming system to outdoors, use filter to collect debris removed from HVAC system, and locate exhaust downwind and away from air intakes and other points of entry into building.

D. Clean the following components by removing surface contaminants and deposits:

1. Air outlets and inlets (registers, grilles, and diffusers).

2. Supply, return, and exhaust fans including fan housings, plenums (except ceiling supply and return plenums), scrolls, blades or vanes, shafts, baffles, dampers, and drive assemblies.

3. Air-handling unit internal surfaces and components including mixing box, coil section, air wash systems, spray eliminators, condensate drain pans, humidifiers and dehumidifiers, filters and filter sections, and condensate collectors and drains.

4. Coils and related components.

5. Return-air ducts, dampers, actuators, and turning vanes except in ceiling plenums and mechanical equipment rooms.

6. Supply-air ducts, dampers, actuators, and turning vanes.

7. Dedicated exhaust and ventilation components and makeup air systems.

E. Mechanical Cleaning Methodology:

1. Use vacuum-collection devices that are operated continuously during cleaning. Connect vacuum device to downstream end of duct sections so areas being cleaned are under negative pressure.

2. Use mechanical agitation to dislodge debris adhered to interior duct surfaces without damaging integrity of ducts or duct accessories.

3. Clean fibrous-glass duct with HEPA vacuuming equipment; do not permit duct to get wet. Replace fibrous-glass duct that is damaged, deteriorated, or delaminated or that has friable material, mold, or fungus growth.

4. Clean coils and coil drain pans according to NADCA 1992. Keep drain pan operational. Rinse coils with clean water to remove latent residues and cleaning materials; comb and straighten fins.

5. Provide drainage and cleanup for wash-down procedures.

6. Antimicrobial Agents and Coatings: Apply EPA-registered antimicrobial agents if fungus is present. Apply antimicrobial agents according to manufacturer's written instructions after removal of surface deposits and debris.

3.4 *START UP*

A. Air Balance: Comply with requirements in Division 23 Section "Testing, Adjusting, and Balancing for HVAC."

3.5 *DUCT SCHEDULE*

A. Indoor Ducts and Fittings:

1. Fibrous-Glass Rectangular Ducts and Fittings:

a. *Minimum Flexural Rigidity: EI-[475] [800] [1400].*

b. *Minimum Board Thickness*: 1-1/2 inches or 2 inches.

B. Outdoor Duct and Fittings:

1. Phenolic-Foam Rectangular Ducts and Fittings:

a. *Minimum Panel Thickness1-3/32 inches.*

b. *Aluminum Cladding: Minimum 0.032 inch thick.*

c. *Polymeric Sealing System: Coat ducts, including gang-nail couplings, grip flanges, and couplings.*

END OF SECTION 233116

PART 4 -

SECTION 233300 - AIR DUCT ACCESSORIES

PART 1 - GENERAL

1.1 *SUMMARY*

A. **Section Includes:**

1. **Backdraft and pressure relief dampers.**
2. **Manual volume dampers.**
3. **Control dampers.**
4. **Fire dampers.**
5. **Smoke dampers.**
6. **Flange connectors.**
7. **Turning vanes.**
8. **Duct-mounted access doors.**
9. **Flexible connectors.**
10. **Flexible ducts.**
11. **Duct accessory hardware.**

1.2 *SUBMITTALS*

A. **Product Data: For each type of product indicated.**

B. **LEED Submittal:**

1. **Product Data for Prerequisite EQ 1: Documentation indicating that units comply with ASHRAE 62.1-2004, Section 5 - "Systems and Equipment."**

C. **Shop Drawings: For duct accessories. Include plans, elevations, sections, details and attachments to other work.**

1. **Detail duct accessories fabrication and installation in ducts and other construction. Include dimensions, weights, loads, and required clearances; and method of field assembly into duct systems and other construction. Include the following:**

a. ***Special fittings.***

b. ***Manual volume damper installations.***

c. ***Control damper installations.***

d. ***Fire-damper and smoke-damper installations, including sleeves; and duct-mounted access doors.***

e. ***Wiring Diagrams: For power, signal, and control wiring.***

D. **Operation and maintenance data.**

1.3 *QUALITY ASSURANCE*

A. **Comply with NFPA 90A, "Installation of Air Conditioning and Ventilating Systems," and with NFPA 90B, "Installation of Warm Air Heating and Air Conditioning Systems."**

B. **Comply with AMCA 500-D testing for damper rating.**

PART 2 - PRODUCTS

2.1 *MATERIALS*

A. **Comply with SMACNA's "HVAC Duct Construction Standards - Metal and Flexible" for acceptable materials, material thicknesses, and duct construction methods unless otherwise indicated. Sheet metal materials shall be free of pitting, seam marks, roller marks, stains, discolorations, and other imperfections.**

B. **Galvanized Sheet Steel: Comply with ASTM A 653/A 653M.**

1. **Galvanized Coating Designation: [**G60**] [**G90**].**

2. **Exposed-Surface Finish: Mill phosphatized.**

C. **Stainless-Steel Sheets: Comply with ASTM A 480/A 480M, Type 304, and having a [No. 2] <Insert finish designation> finish for concealed ducts and <Insert finish designation> finish for exposed ducts.**

D. **Aluminum Sheets: Comply with ASTM B 209, Alloy 3003, Temper H14; with mill finish for concealed ducts and standard, 1-side bright finish for exposed ducts.**

E. **Extruded Aluminum: Comply with ASTM B 221, Alloy 6063, Temper T6.**

F. **Reinforcement Shapes and Plates: Galvanized-steel reinforcement where installed on galvanized sheet metal ducts; compatible materials for aluminum and stainless-steel ducts.**

G. **Tie Rods: Galvanized steel, 1/4-inch minimum diameter for lengths 36 inches or less; 3/8-inch minimum diameter for lengths longer than 36 inches.**

2.2 *BACKDRAFT AND PRESSURE RELIEF DAMPERS*

A. **Manufacturers: Subject to compliance with requirements, [provide products by one of the following] [available manufacturers offering products that may be incorporated into the Work include, but are not limited to, the following]:**

1. **Air Balance Inc.; a division of Mestek, Inc.**

2. **American Warming and Ventilating; a division of Mestek, Inc.**

3. **Cesco Products; a division of Mestek, Inc.**

4. **Duro Dyne Inc.**

5. **Greenheck Fan Corporation.**

6. **Lloyd Industries, Inc.**

7. **Nailor Industries Inc.**

8. **NCA Manufacturing, Inc.**

9. **Pottorff; a division of PCI Industries, Inc.**

10. **Ruskin Company.**

11. **SEMCO Incorporated.**

12. **Vent Products Company, Inc.**

13. **<Insert manufacturer's name>.**

B. **Description: Gravity balanced.**

C. **Maximum Air Velocity: [**2000 fpm**] [**3000 fpm**] <Insert value>.**

D. **Maximum System Pressure: [**1-inch wg**] [**2-inch wg**] <Insert value>.**

E. **Frame: [**0.052-inch- **thick, galvanized sheet steel] [**0.063-inch- **thick extruded aluminum] [**0.052-inch- **thick stainless steel], with welded corners[and mounting flange].**

F. **Blades: Multiple single-piece blades, [center-pivoted,] maximum 6-inch width, [**0.025-inch- **thick, roll-formed aluminum] [**0.050-inch- **thick aluminum sheet] [noncombustible, tear-resistant, neoprene-coated fiberglass] with sealed edges.**

G. **Blade Action: Parallel.**

H. **Blade Seals: [Felt] [Vinyl foam] [Extruded vinyl, mechanically locked] [Neoprene, mechanically locked].**

I. **Blade Axles:**

1. **Material: [Nonferrous metal] [Galvanized steel] [Plated steel] [Stainless steel] [Non-metallic] [Aluminum].**

2. **Diameter: [**0.20 inch**] <Insert value>.**

J. **Tie Bars and Brackets: [Aluminum] [Galvanized steel].**

K. **Return Spring: Adjustable tension.**

L. **Bearings: [Steel ball] [Synthetic pivot bushings] [Steel ball or synthetic pivot bushings].**

M. **Accessories:**

1. **Adjustment device to permit setting for varying differential static pressure.**

2. **Counterweights and spring-assist kits for vertical airflow installations.**

3. **Electric actuators.**

4. **Chain pulls.**

5. **Screen Mounting: Front mounted in sleeve.**

   a. ***Sleeve Thickness: 20-gage minimum.***

   b. ***Sleeve Length: 6 inches minimum.***

6. **Screen Mounting: Rear mounted.**

7. **Screen Material: [Galvanized steel] [Aluminum].**

8. **Screen Type: [Bird] [Insect].**

9. **90-degree stops.**

2.3 *MANUAL VOLUME DAMPERS*

A. **Standard, Steel, Manual Volume Dampers:**

1. **Manufacturers: Subject to compliance with requirements, [provide products by one of the following] [available manufacturers offering products that may be incorporated into the Work include, but are not limited to, the following]:**

   a. ***Air Balance Inc.; a division of Mestek, Inc.***

   b. ***American Warming and Ventilating; a division of Mestek, Inc.***

c. ***Flexmaster U.S.A., Inc.***

d. ***McGill AirFlow LLC.***

e. ***METALAIRE, Inc.***

f. ***Nailor Industries Inc.***

g. ***Pottorff; a division of PCI Industries, Inc.***

h. ***Ruskin Company.***

i. ***Trox USA Inc.***

j. ***Vent Products Company, Inc.***

k. ***<Insert manufacturer's name>.***

2. **Standard leakage rating[, with linkage outside airstream].**

3. **Suitable for horizontal or vertical applications.**

4. **Frames:**

   a. ***Hat-shaped, [galvanized] [stainless]-steel channels, 0.064-inch minimum thickness.***

   b. ***Mitered and welded corners.***

   c. ***Flanges for attaching to walls and flangeless frames for installing in ducts.***

5. **Blades:**

   a. ***Multiple or single blade.***

   b. ***Parallel- or opposed-blade design.***

   c. ***Stiffen damper blades for stability.***

   d. ***[Galvanized] [Stainless]-steel, 0.064 inch thick.***

6. **Blade Axles: [Galvanized steel] [Stainless steel] [Nonferrous metal].**

7. **Bearings:**

   a. ***[Oil-impregnated bronze] [Molded synthetic] [Stainless-steel sleeve].***

   b. ***Dampers in ducts with pressure classes of 3-inch wg or less shall have axles full length of damper blades and bearings at both ends of operating shaft.***

8. **Tie Bars and Brackets: Galvanized steel.**

B. **Standard, Aluminum, Manual Volume Dampers:**

1. **Manufacturers: Subject to compliance with requirements, [provide products by one of the following] [available manufacturers offering products that may be incorporated into the Work include, but are not limited to, the following]:**

   a. ***Air Balance Inc.; a division of Mestek, Inc.***

   b. ***American Warming and Ventilating; a division of Mestek, Inc.***

   c. ***Flexmaster U.S.A., Inc.***

   d. ***McGill AirFlow LLC.***

   e. ***METALAIRE, Inc.***

   f. ***Nailor Industries Inc.***

   g. ***Pottorff; a division of PCI Industries, Inc.***

   h. ***Ruskin Company.***

   i. ***Trox USA Inc.***

   j. ***Vent Products Company, Inc.***

   k. ***<Insert manufacturer's name>.***

2. **Standard leakage rating[, with linkage outside airstream].**

3. **Suitable for horizontal or vertical applications.**

4. **Frames: Hat-shaped, 0.10-inch- thick, aluminum sheet channels; frames with flanges for attaching to walls and flangeless frames for installing in ducts.**

5. **Blades:**

    a. ***Multiple or single blade.***

    b. ***Parallel- or opposed-blade design.***

    c. ***Stiffen damper blades for stability.***

    d. ***Roll-Formed Aluminum Blades: 0.10-inch- thick aluminum sheet.***

    e. ***Extruded-Aluminum Blades: 0.050-inch- thick extruded aluminum.***

6. **Blade Axles: [Galvanized steel] [Stainless steel] [Nonferrous metal].**

7. **Bearings:**

    a. ***[Oil-impregnated bronze] [Molded synthetic] [Stainless-steel sleeve].***

    b. ***Dampers in ducts with pressure classes of 3-inch wg or less shall have axles full length of damper blades and bearings at both ends of operating shaft.***

8. **Tie Bars and Brackets: Aluminum.**

C. **Jackshaft:**

1. **Size: 1-inch diameter.**

2. **Material: Galvanized-steel pipe rotating within pipe-bearing assembly mounted on supports at each mullion and at each end of multiple-damper assemblies.**

3. **Length and Number of Mountings: As required to connect linkage of each damper in multiple-damper assembly.**

D. **Damper Hardware:**

1. **Zinc-plated, die-cast core with dial and handle made of 3/32-inch-thick zinc-plated steel, and a 3/4-inch hexagon locking nut.**

2. **Include center hole to suit damper operating-rod size.**

3. **Include elevated platform for insulated duct mounting.**

2.4 *CONTROL DAMPERS*

A. **Manufacturers: Subject to compliance with requirements, [provide products by one of the following] [available manufacturers offering products that may be incorporated into the Work include, but are not limited to, the following]:**

1. **American Warming and Ventilating; a division of Mestek, Inc.**

2. **Arrow United Industries; a division of Mestek, Inc.**

3. **Cesco Products; a division of Mestek, Inc.**

4. **Duro Dyne Inc.**

5. **Flexmaster U.S.A., Inc.**

6. **Greenheck Fan Corporation.**

7. **Lloyd Industries, Inc.**

8. **M&I Air Systems Engineering; Division of M&I Heat Transfer Products Ltd.**

9. **McGill AirFlow LLC.**

10. **METALAIRE, Inc.**

11. **Metal Form Manufacturing, Inc.**

12. **Nailor Industries Inc.**

13. **NCA Manufacturing, Inc.**

14. **Ruskin Company.**

15. **Vent Products Company, Inc.**

16. **Young Regulator Company.**

17. **<Insert manufacturer's name>.**

B. **Frames:**

1. **[Hat] [U] [Angle] shaped.**

2. **[Galvanized] [Stainless]-steel channels, 0.064 inch thick.**

3. **Mitered and welded corners.**

C. **Blades:**

1. **Multiple blade with maximum blade width of 8 inches.**

2. **[Parallel] [Parallel- and opposed] [Opposed]-blade design.**

3. **[Galvanized] [Stainless] steel.**

4. **0.064 inch thick.**

5. **Blade Edging: Closed-cell neoprene edging.**

6. **Blade Edging: Inflatable seal blade edging, or replaceable rubber seals.**

D. **Blade Axles: 1/2-inch- diameter; [galvanized steel] [stainless steel] [nonferrous metal]; blade-linkage hardware of zinc-plated steel and brass; ends sealed against blade bearings.**

1. **Operating Temperature Range: From minus 40 to plus 200 deg F.**

E. **Bearings:**

1. **[Oil-impregnated bronze] [Molded synthetic] [Stainless-steel sleeve].**

2. **Dampers in ducts with pressure classes of 3-inch wg or less shall have axles full length of damper blades and bearings at both ends of operating shaft.**

3. **Thrust bearings at each end of every blade.**

2.5 *FIRE DAMPERS*

A. **Manufacturers: Subject to compliance with requirements, [provide products by one of the following] [available manufacturers offering products that may be incorporated into the Work include, but are not limited to, the following]:**

1. **Air Balance Inc.; a division of Mestek, Inc.**

2. **Arrow United Industries; a division of Mestek, Inc.**

3. **Cesco Products; a division of Mestek, Inc.**

4. **Greenheck Fan Corporation.**

5. **McGill AirFlow LLC.**

6. **METALAIRE, Inc.**

7. **Nailor Industries Inc.**

8. **NCA Manufacturing, Inc.**

9. **PHL, Inc.**

10. **Pottorff; a division of PCI Industries, Inc.**

11. **Prefco; Perfect Air Control, Inc.**

12. **Ruskin Company.**

13. **Vent Products Company, Inc.**

14. **Ward Industries, Inc.; a division of Hart & Cooley, Inc.**

15. **<Insert manufacturer's name>.**

B. **Type: [Static] [Dynamic] [Static and dynamic]; rated and labeled according to UL 555 by an NRTL.**

C. **Closing rating in ducts up to [**4-inch wg**] <Insert value> static pressure class and minimum [**4000-fpm**] <Insert value> velocity.**

D. **Fire Rating: [1-1/2] [and] [3] hours.**

E. **Frame: [Curtain type with blades inside airstream] [Curtain type with blades outside airstream] [Multiple-blade type] [Curtain type with blades outside airstream except when located behind grille where blades may be inside airstream]; fabricated with roll-formed, 0.034-inch- thick galvanized steel; with mitered and interlocking corners.**

F. **Mounting Sleeve: Factory- or field-installed, galvanized sheet steel.**

1. **Minimum Thickness: 0.052 or 0.138 inch thick, as indicated, and of length to suit application.**

2. **Exception: Omit sleeve where damper-frame width permits direct attachment of perimeter mounting angles on each side of wall or floor; thickness of damper frame must comply with sleeve requirements.**

G. **Mounting Orientation: Vertical or horizontal as indicated.**

H. **Blades: Roll-formed, interlocking, 0.034-inch- thick, galvanized sheet steel. In place of interlocking blades, use full-length, 0.034-inch- thick, galvanized-steel blade connectors.**

I. **Horizontal Dampers: Include blade lock and stainless-steel closure spring.**

J. **Heat-Responsive Device: Replaceable, [**165 deg F**] [**212 deg F**] <Insert temperature> rated, fusible links.**

K. **Heat-Responsive Device: [Electric] [Pneumatic] resettable link and switch package, factory installed, [**165 deg F**] [and] [**212 deg F**] <Insert temperature> rated.**

2.6 *SMOKE DAMPERS*

A. **Manufacturers: Subject to compliance with requirements, [provide products by one of the following] [available manufacturers offering products that may be incorporated into the Work include, but are not limited to, the following]:**

1. **Air Balance Inc.; a division of Mestek, Inc.**
2. **Cesco Products; a division of Mestek, Inc.**
3. **Greenheck Fan Corporation.**
4. **Nailor Industries Inc.**
5. **PHL, Inc.**
6. **Ruskin Company.**
7. **<Insert manufacturer's name>.**

B. **General Requirements: Label according to UL 555S by an NRTL.**

C. **Smoke Detector: Integral, factory wired for single-point connection.**

D. **Frame: [Curtain type with blades inside airstream] [Curtain type with blades outside airstream] [Multiple-blade type] [Curtain type with blades outside airstream except when located behind grille where blades may be inside airstream]; fabricated with roll-formed, 0.034-inch- thick galvanized steel; with mitered and interlocking corners.**

E. **Blades: Roll-formed, horizontal, interlocking, 0.034-inch- thick, galvanized sheet steel. In place of interlocking blades, use full-length, 0.034-inch- thick, galvanized-steel blade connectors.**

F. **Leakage: [Class I] [Class II] <Insert class>.**

G. **Rated pressure and velocity to exceed design airflow conditions.**

H. **Mounting Sleeve: Factory-installed, 0.052-inch- thick, galvanized sheet steel; length to suit wall or floor application[with factory-furnished silicone calking].**

I. **Damper Motors: [Modulating] [or] [two-position] action.**

J. **Comply with NEMA designation, temperature rating, service factor, enclosure type, and efficiency requirements for motors specified in Division 23 Section "Common Motor Requirements for HVAC Equipment."**

1. **Motor Sizes: Minimum size as indicated. If not indicated, large enough so driven load will not require motor to operate in service factor range above 1.0.**

2. **Controllers, Electrical Devices, and Wiring: Comply with requirements for electrical devices and connections specified in [Division 23 Section "Instrumentation and Control for HVAC."] [Division 26 Sections.]**

3. **Permanent-Split-Capacitor or Shaded-Pole Motors: With oil-immersed and sealed gear trains.**

4. **Spring-Return Motors: Equip with an integral spiral-spring mechanism where indicated. Enclose entire spring mechanism in a removable housing designed for service or adjustments. Size for running torque rating of 150 in. x lbf and breakaway torque rating of 150 in. x lbf.**

5. **Outdoor Motors and Motors in Outdoor-Air Intakes: Equip with O-ring gaskets designed to make motors weatherproof. Equip motors with internal heaters to permit normal operation at minus 40 deg F.**

6. **Nonspring-Return Motors: For dampers larger than 25 sq. ft., size motor for running torque rating of 150 in. x lbf and breakaway torque rating of 300 in. x lbf.**

7. **Electrical Connection: [115 V, single phase, 60 Hz] <Insert values>.**

K. **Accessories:**

1. **Auxiliary switches for [signaling] [fan control] [or] [position indication].**

2. **[Momentary test switch] [Test and reset switches], [damper] [remote] mounted.**

2.7 *FLANGE CONNECTORS*

A. **Manufacturers: Subject to compliance with requirements, [provide products by one of the following] [available manufacturers offering products that may be incorporated into the Work include, but are not limited to, the following]:**

1. **Ductmate Industries, Inc.**

2. **Nexus PDQ; Division of Shilco Holdings Inc.**

3. **Ward Industries, Inc.; a division of Hart & Cooley, Inc.**

4. **<Insert manufacturer's name>.**

B. **Description: [Add-on] [or] [roll-formed], factory-fabricated, slide-on transverse flange connectors, gaskets, and components.**

C. **Material: Galvanized steel.**

D. **Gage and Shape: Match connecting ductwork.**

2.8 *TURNING VANES*

A. **Manufacturers: Subject to compliance with requirements, [provide products by one of the following] [available manufacturers offering products that may be incorporated into the Work include, but are not limited to, the following]:**

1. **Ductmate Industries, Inc.**

2. **Duro Dyne Inc.**

3. **METALAIRE, Inc.**

4. **SEMCO Incorporated.**

5. **Ward Industries, Inc.; a division of Hart & Cooley, Inc.**

6. **<Insert manufacturer's name>.**

B. **Manufactured Turning Vanes for Metal Ducts: Curved blades of galvanized sheet steel; support with bars perpendicular to blades set; set into vane runners suitable for duct mounting.**

1. **Acoustic Turning Vanes: Fabricate airfoil-shaped aluminum extrusions with perforated faces and fibrous-glass fill.**

C. **Manufactured Turning Vanes for Nonmetal Ducts: Fabricate curved blades of resin-bonded fiberglass with acrylic polymer coating; support with bars perpendicular to blades set; set into vane runners suitable for duct mounting.**

D. **General Requirements: Comply with SMACNA's "HVAC Duct Construction Standards - Metal and Flexible"; Figures 2-3, "Vanes and Vane Runners," and 2-4, "Vane Support in Elbows."**

E. **Vane Construction: [Single] [Double] wall.**

F. **Vane Construction: Single wall for ducts up to [**48 inches**] <Insert dimension> wide and double wall for larger dimensions.**

2.9 *DUCT-MOUNTED ACCESS DOORS*

A. **Manufacturers: Subject to compliance with requirements, [provide products by one of the following] [available manufacturers offering products that may be incorporated into the Work include, but are not limited to, the following]:**

1. **American Warming and Ventilating; a division of Mestek, Inc.**

2. **Cesco Products; a division of Mestek, Inc.**

3. **Ductmate Industries, Inc.**

4. **Flexmaster U.S.A., Inc.**

5. **Greenheck Fan Corporation.**

6. **McGill AirFlow LLC.**

7. **Nailor Industries Inc.**

8. **Pottorff; a division of PCI Industries, Inc.**

9. **Ventfabrics, Inc.**

10. **Ward Industries, Inc.; a division of Hart & Cooley, Inc.**

11. **<Insert manufacturer's name>.**

B. **Duct-Mounted Access Doors: Fabricate access panels according to SMACNA's "HVAC Duct Construction Standards - Metal and Flexible"; Figures 2-10, "Duct Access Doors and Panels," and 2-11, "Access Panels - Round Duct."**

1. **Door:**

   a. ***Double wall, rectangular.***

   b. ***Galvanized sheet metal with insulation fill and thickness as indicated for duct pressure class.***

   c. ***Vision panel.***

   d. ***Hinges and Latches: 1-by-1-inch butt or piano hinge and cam latches.***

   e. ***Fabricate doors airtight and suitable for duct pressure class.***

2. **Frame: Galvanized sheet steel, with bend-over tabs and foam gaskets.**

3. **Number of Hinges and Locks:**

a. ***Access Doors Less Than 12 Inches Square: No hinges and two sash locks.***

b. ***Access Doors up to 18 Inches Square: Two hinges and two sash locks.***

c. ***Access Doors up to 24 by 48 Inches: Three hinges and two compression latches[with outside and inside handles].***

d. ***Access Doors Larger Than 24 by 48 Inches: Four hinges and two compression latches with outside and inside handles.***

C. **Pressure Relief Access Door:**

1. **Door and Frame Material: Galvanized sheet steel.**

2. **Door: [Single wall] [Double wall with insulation fill] with metal thickness applicable for duct pressure class.**

3. **Operation: Open outward for positive-pressure ducts and inward for negative-pressure ducts.**

4. **Factory set at [**10-inch wg**] <Insert pressure>.**

5. **Doors close when pressures are within set-point range.**

6. **Hinge: Continuous piano.**

7. **Latches: Cam.**

8. **Seal: Neoprene or foam rubber.**

9. **Insulation Fill: 1-inch- thick, fibrous-glass or polystyrene-foam board.**

2.10 *DUCT ACCESS PANEL ASSEMBLIES*

A. **Manufacturers: Subject to compliance with requirements, [provide products by one of the following] [available manufacturers offering products that may be incorporated into the Work include, but are not limited to, the following]:**

1. **Ductmate Industries, Inc.**

2. **Flame Gard, Inc.**

3. **3M.**

4. **<Insert manufacturer's name>.**

B. **Labeled according to UL 1978 by an NRTL.**

C. **Panel and Frame: Minimum thickness [**0.0528-inch **carbon] [**0.0428-inch **stainless] steel.**

D. **Fasteners: [Carbon] [Stainless] steel. Panel fasteners shall not penetrate duct wall.**

E. **Gasket: Comply with NFPA 96; grease-tight, high-temperature ceramic fiber, rated for minimum 2000 deg F.**

F. **Minimum Pressure Rating: 10-inch wg, positive or negative.**

2.11 *FLEXIBLE CONNECTORS*

A. **Manufacturers: Subject to compliance with requirements, [provide products by one of the following] [available manufacturers offering products that may be incorporated into the Work include, but are not limited to, the following]:**

1. **Ductmate Industries, Inc.**

2. **Duro Dyne Inc.**

3. **Ventfabrics, Inc.**

4. **Ward Industries, Inc.; a division of Hart & Cooley, Inc.**

5. **<Insert manufacturer's name>.**

B. **Materials: Flame-retardant or noncombustible fabrics.**

C. **Coatings and Adhesives: Comply with UL 181, Class 1.**

D. **Metal-Edged Connectors: Factory fabricated with a fabric strip [**3-1/2 inches**] [**5-3/4 inches**] wide attached to 2 strips of 2-3/4-inch- wide, 0.028-inch- thick, galvanized sheet steel or 0.032-inch- thick aluminum sheets. Provide metal compatible with connected ducts.**

E. **Indoor System, Flexible Connector Fabric: Glass fabric double coated with neoprene.**

1. **Minimum Weight: 26 oz./sq. yd..**

2. **Tensile Strength: 480 lbf/inch in the warp and 360 lbf/inch in the filling.**

3. **Service Temperature: Minus 40 to plus 200 deg F.**

F. **Outdoor System, Flexible Connector Fabric: Glass fabric double coated with weatherproof, synthetic rubber resistant to UV rays and ozone.**

1. **Minimum Weight: 24 oz./sq. yd..**

2. **Minimum Tensile Strength: 500 lbf/inch in the warp and 440 lbf/inch in the filling.**

3. **Service Temperature: Minus 50 to plus 250 deg F.**

G. **Thrust Limits: Combination coil spring and elastomeric insert with spring and insert in compression, and with a load stop. Include rod and angle-iron brackets for attaching to fan discharge and duct.**

1. **Frame: Steel, fabricated for connection to threaded rods and to allow for a maximum of 30 degrees of angular rod misalignment without binding or reducing isolation efficiency.**

2. **Outdoor Spring Diameter: Not less than 80 percent of the compressed height of the spring at rated load.**

3. **Minimum Additional Travel: 50 percent of the required deflection at rated load.**

4. **Lateral Stiffness: More than 80 percent of rated vertical stiffness.**

5. **Overload Capacity: Support 200 percent of rated load, fully compressed, without deformation or failure.**

6. **Elastomeric Element: Molded, oil-resistant rubber or neoprene.**

7. **Coil Spring: Factory set and field adjustable for a maximum of 1/4-inch movement at start and stop.**

2.12 *FLEXIBLE DUCTS*

A. **Manufacturers: Subject to compliance with requirements, [provide products by one of the following] [available manufacturers offering products that may be incorporated into the Work include, but are not limited to, the following]:**

1. **Flexmaster U.S.A., Inc.**

2. **McGill AirFlow LLC.**

3. **Ward Industries, Inc.; a division of Hart & Cooley, Inc.**

4. **<Insert manufacturer's name>.**

B. **Noninsulated, Flexible Duct: UL 181, Class 1, 2-ply vinyl film supported by helically wound, spring-steel wire.**

1. **Pressure Rating: 10-inch wg positive and 1.0-inch wg negative.**

2. **Maximum Air Velocity: 4000 fpm.**

3. **Temperature Range: Minus 10 to plus 160 deg F.**

C. **Noninsulated, Flexible Duct: UL 181, Class 1, black polymer film supported by helically wound, spring-steel wire.**

1. **Pressure Rating: 4-inch wg positive and 0.5-inch wg negative.**

2. **Maximum Air Velocity: 4000 fpm.**

3. **Temperature Range: Minus 20 to plus 175 deg F.**

D. **Noninsulated, Flexible Duct: UL 181, Class 1, multiple layers of aluminum laminate supported by helically wound, spring-steel wire.**

1. **Pressure Rating: 10-inch wg positive and 1.0-inch wg negative.**

2. **Maximum Air Velocity: 4000 fpm.**

3. **Temperature Range: Minus 20 to plus 210 deg F.**

E. **Noninsulated, Flexible Duct: UL 181, Class 1, aluminum laminate and polyester film with latex adhesive supported by helically wound, spring-steel wire.**

1. **Pressure Rating: 10-inch wg positive and 1.0-inch wg negative.**

2. **Maximum Air Velocity: 4000 fpm.**

3. **Temperature Range: Minus 20 to plus 210 deg F.**

F. **Noninsulated, Flexible Duct: UL 181, Class 0, interlocking spiral of aluminum foil.**

1. **Pressure Rating: 8-inch wg positive or negative.**

2. **Maximum Air Velocity: 5000 fpm.**

3. **Temperature Range: Minus 100 to plus 435 deg F.**

G. **Insulated, Flexible Duct: UL 181, Class 1, 2-ply vinyl film supported by helically wound, spring-steel wire; fibrous-glass insulation; [polyethylene] [aluminized] vapor-barrier film.**

1. **Pressure Rating: 10-inch wg positive and 1.0-inch wg negative.**

2. **Maximum Air Velocity: 4000 fpm.**

3. **Temperature Range: Minus 10 to plus 160 deg F.**

4. **Insulation R-value: [Comply with ASHRAE/IESNA 90.1-2004] <Insert value>.**

H. **Insulated, Flexible Duct: UL 181, Class 1, black polymer film supported by helically wound, spring-steel wire; fibrous-glass insulation; [polyethylene] [aluminized] vapor-barrier film.**

1. **Pressure Rating: 4-inch wg positive and 0.5-inch wg negative.**

2. **Maximum Air Velocity: 4000 fpm.**

3. **Temperature Range: Minus 20 to plus 175 deg F.**

4. **Insulation R-Value: [Comply with ASHRAE/IESNA 90.1-2004] <Insert value>.**

I. **Insulated, Flexible Duct: UL 181, Class 1, multiple layers of aluminum laminate supported by helically wound, spring-steel wire; fibrous-glass insulation; [polyethylene] [aluminized] vapor-barrier film.**

1. **Pressure Rating: 10-inch wg positive and 1.0-inch wg negative.**

2. **Maximum Air Velocity: 4000 fpm.**

3. **Temperature Range: Minus 20 to plus 210 deg F.**

4. **Insulation R-value: [Comply with ASHRAE/IESNA 90.1-2004] <Insert value>.**

J. **Insulated, Flexible Duct: UL 181, Class 1, aluminum laminate and polyester film with latex adhesive supported by helically wound, spring-steel wire; fibrous-glass insulation; [polyethylene] [aluminized] vapor-barrier film.**

1. **Pressure Rating: 10-inch wg positive and 1.0-inch wg negative.**

2. **Maximum Air Velocity: 4000 fpm.**

3. **Temperature Range: Minus 20 to plus 210 deg F.**

4. **Insulation R-value: [Comply with ASHRAE/IESNA 90.1-2004] <Insert value>.**

K. **Insulated, Flexible Duct: UL 181, Class 0, interlocking spiral of aluminum foil; fibrous-glass insulation; [polyethylene] [aluminized] vapor-barrier film.**

1. **Pressure Rating: 8-inch wg positive or negative.**

2. **Maximum Air Velocity: 5000 fpm.**

3. **Temperature Range: Minus 20 to plus 250 deg F.**

4. **Insulation R-value: [Comply with ASHRAE/IESNA 90.1-2004] <Insert value>.**

L. **Flexible Duct Connectors:**

1. **Clamps: [Stainless-steel band with cadmium-plated hex screw to tighten band with a worm-gear action] [Nylon strap] in sizes 3 through 18 inches, to suit duct size.**

2. **Non-Clamp Connectors: [Adhesive] [Liquid adhesive plus tape] [Adhesive plus sheet metal screws].**

2.13 *DUCT ACCESSORY HARDWARE*

A. **Instrument Test Holes: Cast iron or cast aluminum to suit duct material, including screw cap and gasket. Size to allow insertion of pitot tube and other testing instruments and of length to suit duct-insulation thickness.**

B. **Adhesives: High strength, quick setting, neoprene based, waterproof, and resistant to gasoline and grease.**

PART 3 - EXECUTION

3.1 *INSTALLATION*

A. **Install duct accessories according to applicable details in SMACNA's "HVAC Duct Construction Standards - Metal and Flexible" for metal ducts and in NAIMA AH116, "Fibrous Glass Duct Construction Standards," for fibrous-glass ducts.**

B. **Install duct accessories of materials suited to duct materials; use galvanized-steel accessories in galvanized-steel and fibrous-glass ducts, stainless-steel accessories in stainless-steel ducts, and aluminum accessories in aluminum ducts.**

C. **Install [backdraft] [control] dampers at inlet of exhaust fans or exhaust ducts as close as possible to exhaust fan unless otherwise indicated.**

D. **Install volume dampers at points on supply, return, and exhaust systems where branches extend from larger ducts. Where dampers are installed in ducts having duct liner, install dampers with hat channels of same depth as liner, and terminate liner with nosing at hat channel.**

1. **Install steel volume dampers in steel ducts.**

2. **Install aluminum volume dampers in aluminum ducts.**

E. **Set dampers to fully open position before testing, adjusting, and balancing.**

F. **Install test holes at fan inlets and outlets and elsewhere as indicated.**

G. **Install fire[and smoke] dampers according to UL listing.**

H. **Install duct access doors on sides of ducts to allow for inspecting, adjusting, and maintaining accessories and equipment at the following locations:**

1. **On both sides of duct coils.**

2. **Upstream[and downstream] from duct filters.**

3. **At outdoor-air intakes and mixed-air plenums.**

4. **At drain pans and seals.**

5. **Downstream from manual volume dampers, control dampers, backdraft dampers, and equipment.**

6. **Adjacent to and close enough to fire or smoke dampers, to reset or reinstall fusible links. Access doors for access to fire or smoke dampers having fusible links shall be pressure relief access doors; and shall be outward operation for access doors installed upstream from dampers and inward operation for access doors installed downstream from dampers.**

7. **At each change in direction and at maximum 50-foot spacing.**

8. **Upstream[and downstream] from turning vanes.**

9. **Control devices requiring inspection.**

10. **Elsewhere as indicated.**

I. **Install access doors with swing against duct static pressure.**

J. **Access Door Sizes:**

1. **One-Hand or Inspection Access: 8 by 5 inches.**

2. **Two-Hand Access: 12 by 6 inches.**

3. **Head and Hand Access: 18 by 10 inches.**

4. **Head and Shoulders Access: 21 by 14 inches.**

5. **Body Access: 25 by 14 inches.**

6. **Body plus Ladder Access: 25 by 17 inches.**

K. **Label access doors according to Division 23 Section "Identification for HVAC Piping and Equipment" to indicate the purpose of access door.**

L. **Install flexible connectors to connect ducts to equipment.**

M. **For fans developing static pressures of 5-inch wg and more, cover flexible connectors with loaded vinyl sheet held in place with metal straps.**

N. **Connect terminal units to supply ducts[directly or] with maximum [**12-inch**] <Insert value> lengths of flexible duct. Do not use flexible ducts to change directions.**

O. **Connect diffusers or light troffer boots to ducts[directly or] with maximum [**60-inch**] <Insert value> lengths of flexible duct clamped or strapped in place.**

P. **Connect flexible ducts to metal ducts with [adhesive] [liquid adhesive plus tape] [draw bands] [adhesive plus sheet metal screws].**

Q. **Install duct test holes where required for testing and balancing purposes.**

R. **Install thrust limits at centerline of thrust, symmetrical on both sides of equipment. Attach thrust limits at centerline of thrust and adjust to a maximum of 1/4-inch movement during start and stop of fans.**

3.2 *FIELD QUALITY CONTROL*

A. **Tests and Inspections:**

1. **Operate dampers to verify full range of movement.**

2. **Inspect locations of access doors and verify that purpose of access door can be performed.**

3. **Operate fire and smoke dampers to verify full range of movement and verify that proper heat-response device is installed.**

4. **Inspect turning vanes for proper and secure installation.**

END OF SECTION 233300

SECTION 233416 - CENTRIFUGAL HVAC FANS

PART 1 - GENERAL

1.1 *SUMMARY*

A. **This Section includes the following:**

1. **Backward-inclined centrifugal fans.**

2. **Forward-curved centrifugal fans.**

1.2 *SUBMITTALS*

A. **Product Data: Include rated capacities, furnished specialties, and accessories for each type of product indicated.**

B. **Shop Drawings: Detail equipment assemblies and indicate dimensions, weights, loads, required clearances, method of field assembly, components, and location and size of each field connection.**

C. **Field quality-control test reports.**

D. **Operation and maintenance data.**

1.3 *QUALITY ASSURANCE*

A. **Electrical Components, Devices, and Accessories: Listed and labeled as defined in NFPA 70, Article 100, by a testing agency acceptable to authorities having jurisdiction, and marked for intended use.**

B. **AMCA Compliance: Products shall comply with performance requirements and shall be licensed to use the AMCA-Certified Ratings Seal.**

C. **NEMA Compliance: Motors and electrical accessories shall comply with NEMA 1.**

PART 2 - PRODUCTS

2.1 *BACKWARD-INCLINED CENTRIFUGAL FANS*

A. **Available Manufacturers: Subject to compliance with requirements, manufacturers offering products that may be incorporated into the Work include, but are not limited to, the following:**

B. **Manufacturers: Subject to compliance with requirements, provide products by one of the following:**

C. **Basis-of-Design Product: Subject to compliance with requirements, provide [the product indicated on Drawings] <Insert manufacturer's name; product name or designation> or a comparable product by one of the following:**

1. **ABB Fan Group North America.**
2. **Acme Engineering & Mfg. Corp.**
3. **Aerovent; a Twin City Fan Company.**
4. **Airmaster Fan Co.**
5. **Ammerman; General Resource Corp.**
6. **Bayley Fans; a division of Lau Industries, Inc.**
7. **Carrier Corporation.**
8. **Central Blower Company.**
9. **Chicago Blower Corporation.**
10. **Cincinnati Fan.**
11. **CML Northern Blower Inc.**
12. **Howden Fan Co.**
13. **Industrial Air; a division of Lau Industries, Inc.**
14. **Loren Cook Company.**

15. **Madison Manufacturing.**

16. **New Philadelphia Fan Co.**

17. **New York Blower Company (The).**

18. **Trane.**

19. **<Insert manufacturer's name.>**

D. **Description: Factory-fabricated, -assembled, -tested, and -finished, belt-driven centrifugal fans consisting of housing, wheel, fan shaft, bearings, motor [and disconnect switch], drive assembly, and support structure.**

E. **Housings: Formed panels to make curved-scroll housings with shaped cutoff; with doors or panels to allow access to internal parts and components.**

2.2 ***Panel Bracing: Steel angle- or channel-iron member supports for mounting and supporting fan scroll, wheel, motor, and accessories.***

2.3 ***Spun inlet cone with flange.***

1. **Outlet flange.**

B. **Backward-Inclined Wheels: Single-width-single-inlet and double-width-double-inlet construction with curved inlet flange, backplate, backward-inclined blades[welded or riveted to flange and backplate; cast-iron or cast-steel hub riveted to backplate] and fastened to shaft with set screws.**

C. **Shafts: Statically and dynamically balanced and selected for continuous operation at maximum rated fan speed and motor horsepower, with final alignment and belt adjustment made after installation.**

1. **Turned, ground, and polished hot-rolled steel with keyway. Ship with a protective coating of lubricating oil.**

2. **Designed to operate at no more than 70 percent of first critical speed at top of fan's speed range.**

D. **Prelubricated and Sealed Shaft Bearings: Self-aligning, pillow-block-type ball bearings.**

1. **Ball-Bearing Rating Life: ABMA 9, Ll0 at [50,000 hours] [120,000 hours] <Insert hours>.**

2. **Roller-Bearing Rating Life: ABMA 11, Ll0 at [50,000 hours] [120,000 hours] <Insert hours>.**

E. **Belt Drives: Factory mounted, with final alignment and belt adjustment made after installation.**

1. **Service Factor Based on Fan Motor Size: [1.5] [1.4] [1.3] [1.2].**

2. **Fan Pulleys: Cast iron or cast steel with split, tapered bushing; dynamically balanced at factory.**

3. **Motor Pulleys: Adjustable pitch for use with motors through 5 hp; fixed pitch for use with larger motors. Select pulley so pitch adjustment is at the middle of adjustment range at fan design conditions.**

4. **Belts: Oil resistant, nonsparking, and nonstatic; matched sets for multiple belt drives.**

5. **Belt Guards: Fabricate to comply with OSHA and SMACNA requirements of diamond-mesh wire screen welded to steel angle frame or equivalent, prime coated. Secure to fan or fan supports without short circuiting vibration isolation. Include provisions for adjustment of belt tension, lubrication, and use of tachometer with guard in place.**

6. **Motor Mount: Adjustable for belt tensioning.**

F. **Accessories:**

1. **Scroll Access Doors: Shaped to conform to scroll, with quick-opening latches and gaskets.**

2. **Scroll Drain Connection: NPS 1 steel pipe coupling welded to low point of fan scroll.**

3. **Companion Flanges: Rolled flanges for duct connections of same material as housing.**

4. **Variable Inlet Vanes: With blades supported at both ends with two permanently lubricated bearings of same material as housing. Variable mechanism terminating in single control lever with control shaft for double-width fans.**

5. **Discharge Dampers: Assembly with [parallel] [opposed] blades constructed of two plates formed around and to shaft, channel frame, and sealed ball bearings; with blades linked outside of airstream to single control lever of same material as housing.**

6. **Inlet Screens: Grid screen of same material as housing.**

7. **Spark-Resistant Construction: AMCA 99.**

8. **Shaft Seals: Airtight seals installed around shaft on drive side of single-width fans.**

9. **Weather Cover: Enameled-steel sheet with ventilation slots, bolted to housing.**

G. **Motors: Comply with requirements in Division 23 Section "Common Motor Requirements for HVAC Equipment."**

1. **Enclosure Type: Totally enclosed, fan cooled.**

2.4 *FORWARD-CURVED CENTRIFUGAL FANS*

A. **Available Manufacturers: Subject to compliance with requirements, manufacturers offering products that may be incorporated into the Work include, but are not limited to, the following:**

B. **Manufacturers: Subject to compliance with requirements, provide products by one of the following:**

C. **Basis-of-Design Product: Subject to compliance with requirements, provide [the product indicated on Drawings] <Insert manufacturer's name; product name or designation> or a comparable product by one of the following:**

1. **ABB Fan Group North America.**
2. **Acme Engineering & Mfg. Corp.**
3. **Aerovent; a Twin City Fan Company.**
4. **Airmaster Fan Co.**
5. **Ammerman; General Resource Corp.**
6. **Bayley Fans; a division of Lau Industries, Inc.**
7. **Carrier Corporation.**
8. **Central Blower Corporation.**
9. **Chicago Blower Corporation.**
10. **Cincinnati Fan.**
11. **CML Northern Blower Inc.**
12. **Howden Fan Co.**
13. **Industrial Air; a division of Lau Industries, Inc.**
14. **Loren Cook Company.**
15. **Madison Manufacturing.**
16. **New Philadelphia Fan Co.**
17. **New York Blower Company (The).**
18. **Trane.**

19. **<Insert manufacturer's name.>**

D. **Description: Factory-fabricated, -assembled, -tested, and -finished, belt-driven centrifugal fans consisting of housing, wheel, fan shaft, bearings, motor [and disconnect switch], drive assembly, and support structure.**

E. **Housings: Formed panels to make curved-scroll housings with shaped cutoff; with doors or panels to allow access to internal parts and components.**

1. **Panel Bracing: Steel angle- or channel-iron member supports for mounting and supporting fan scroll, wheel, motor, and accessories.**

2. **Spun inlet cone with flange.**

3. **Outlet flange.**

F. **Forward-Curved Wheels: Black-enameled or galvanized steel construction with inlet flange, backplate, shallow blades with inlet and tip curved forward in direction of airflow, mechanically secured to flange and backplate; cast-steel hub swaged to backplate and fastened to shaft with set screws.**

G. **Shafts: Statically and dynamically balanced and selected for continuous operation at maximum rated fan speed and motor horsepower, with final alignment and belt adjustment made after installation.**

1. **Turned, ground, and polished hot-rolled steel with keyway. Ship with protective coating of lubricating oil.**

2. **Designed to operate at no more than 70 percent of first critical speed at top of fan's speed range.**

H. **Prelubricated and Sealed Shaft Bearings: Self-aligning, pillow-block-type ball bearings.**

I. **Belt Drives: Factory mounted, with final alignment and belt adjustment made after installation.**

1. **Service Factor Based on Fan Motor Size: 1.5.**

2. **Fan Pulleys: Cast iron or cast steel with split, tapered bushing; dynamically balanced at factory.**

3. **Motor Pulleys: Adjustable pitch for use with motors through 5 hp; fixed pitch for use with larger motors. Select pulley so pitch adjustment is at the middle of adjustment range at fan design conditions.**

4. **Belts: Oil resistant, nonsparking, and nonstatic; matched sets for multiple belt drives.**

5. **Belt Guards: Fabricate to comply with OSHA and SMACNA requirements of diamond-mesh wire screen welded to steel angle frame or equivalent, prime coated. Secure to fan or fan supports without short circuiting vibration isolation. Include provisions for adjustment of belt tension, lubrication, and use of tachometer with guard in place.**

6. **Motor Mount: Adjustable for belt tensioning.**

J. **Accessories:**

1. **Scroll Access Doors: Shaped to conform to scroll, with quick-opening latches and gaskets.**

2. **Scroll Drain Connection: NPS 1 steel pipe coupling welded to low point of fan scroll.**

3. **Companion Flanges: Rolled flanges for duct connections of same material as housing.**

4. **Variable Inlet Vanes: With blades supported at both ends with two permanently lubricated bearings of same material as housing. Variable mechanism terminating in single control lever with control shaft for double-width fans.**

5. **Discharge Dampers: Assembly with [parallel] [opposed] blades constructed of two plates formed around and to shaft, channel**

frame, and sealed ball bearings; with blades linked outside of air-stream to single control lever of same material as housing.

6. **Inlet Screens: Grid screen of same material as housing.**

7. **Shaft Seals: Airtight seals installed around shaft on drive side of single-width fans.**

8. **Weather Cover: Enameled-steel sheet with ventilation slots, bolted to housing.**

K. **Motors: Comply with requirements in Division 23 Section "Common Motor Requirements for HVAC Equipment."**

1. **Enclosure Type: Totally enclosed, fan cooled.**

2.5 *SOURCE QUALITY CONTROL*

A. **Sound-Power Level Ratings: Comply with AMCA 301, "Methods for Calculating Fan Sound Ratings from Laboratory Test Data." Factory test fans according to AMCA 300, "Reverberant Room Method for Sound Testing of Fans." Label fans with the AMCA-Certified Ratings Seal.**

B. **Fan Performance Ratings: Establish flow rate, pressure, power, air density, speed of rotation, and efficiency by factory tests and ratings according to AMCA 210, "Laboratory Methods of Testing Fans for Rating."**

PART 3 - EXECUTION

3.1 *INSTALLATION*

A. **Install centrifugal fans level and plumb.**

B. **Support floor-mounting units using [spring isolators] [restrained spring isolators] <Insert device> having a static deflection of [**1 inch**] <Insert deflection>. Vibration- and seismic-control devices are specified in Division 23 Section "Vibration and Seismic Controls for HVAC Piping and Equipment."**

1. **Secure vibration and seismic controls to concrete bases using anchor bolts cast in concrete base.**

C. **Install floor-mounting units on concrete bases. Concrete, reinforcement, and formwork requirements are specified in Division 03 Section "Cast-in-Place Concrete."**

D. **Install floor-mounting units on concrete bases designed to withstand, without damage to equipment, the seismic force required by authorities having jurisdiction. Concrete, reinforcement, and formwork requirements are specified in Division 03 Section "Cast-in-Place Concrete."**

E. **Support suspended units from structure using threaded steel rods and [elastomeric hangers] [spring hangers] [spring hangers with vertical-limit stops] <Insert device> having a static deflection of [**1 inch**] <Insert deflection>. Vibration-control devices are specified in Division 23 Section "Vibration and Seismic Controls for HVAC Piping and Equipment."**

F. **Install units with clearances for service and maintenance.**

G. **Label fans according to requirements specified in Division 23 Section "Identification for HVAC Piping and Equipment."**

3.2 *CONNECTIONS*

A. **Duct installation and connection requirements are specified in other Division 23 Sections. Drawings indicate general arrangement of ducts and duct accessories. Make final duct connections with flexible connectors. Flexible connectors are specified in Division 23 Section "Air Duct Accessories."**

B. **Install ducts adjacent to fans to allow service and maintenance.**

C. **Install line-sized piping from scroll drain connection, with trap with seal equal to 1.5 times specified static pressure, to nearest floor drain.**

D. **Ground equipment according to Division 26 Section "Grounding and Bonding for Electrical Systems."**

E. **Connect wiring according to Division 26 Section "Low-Voltage Electrical Power Conductors and Cables."**

3.3 *FIELD QUALITY CONTROL*

A. **Perform the following field tests and inspections and prepare test reports:**

1. **Verify that shipping, blocking, and bracing are removed.**

2. **Verify that unit is secure on mountings and supporting devices and that connections to ducts and electrical components are complete. Verify that proper thermal-overload protection is installed in motors, starters, and disconnect switches.**

3. **Verify that cleaning and adjusting are complete.**

4. **Disconnect fan drive from motor, verify proper motor rotation direction, and verify fan wheel free rotation and smooth bearing operation. Reconnect fan drive system, align and adjust belts, and install belt guards.**

5. **Adjust belt tension.**

6. **Adjust damper linkages for proper damper operation.**

7. **Verify lubrication for bearings and other moving parts.**

8. **Verify that manual and automatic volume control and fire and smoke dampers in connected ductwork systems are in fully open position.**

9. **Refer to Division 23 Section "Testing, Adjusting, and Balancing for HVAC" for testing, adjusting, and balancing procedures.**

10. **Remove and replace malfunctioning units and retest as specified above.**

B. **Test and adjust controls and safeties. Replace damaged and malfunctioning controls and equipment.**

END OF SECTION 233416

SECTION 233423 - HVAC POWER VENTILATORS

PART 1 - GENERAL

1.1 *SUMMARY*

A. **This Section includes the following:**

1. **Centrifugal roof ventilators.**
2. **Centrifugal wall ventilators.**
3. **Ceiling-mounting ventilators.**
4. **In-line centrifugal fans.**

1.2 *SUBMITTALS*

A. **Product Data: Include rated capacities, furnished specialties, and accessories for each type of product indicated and include the following:**

B. **Shop Drawings: Detail equipment assemblies and indicate dimensions, weights, loads, required clearances, method of field assembly, components, and location and size of each field connection.**

C. **Field quality-control test reports.**

D. **Operation and maintenance data.**

1.3 *QUALITY ASSURANCE*

A. **Electrical Components, Devices, and Accessories: Listed and labeled as defined in NFPA 70, Article 100, by a testing agency acceptable to authorities having jurisdiction, and marked for intended use.**

B. **NEMA Compliance: Motors and electrical accessories shall comply with NEMA standards.**

C. **UL Standard: Power ventilators shall comply with UL 705.**

PART 2 - PRODUCTS

2.1 *CENTRIFUGAL ROOF VENTILATORS*

A. **Available Manufacturers: Subject to compliance with requirements, manufacturers offering products that may be incorporated into the Work include, but are not limited to, the following:**

B. **Manufacturers: Subject to compliance with requirements, provide products by one of the following:**

C. **Basis-of-Design Product: Subject to compliance with requirements, provide [the product indicated on Drawings] <Insert manufacturer's name; product name or designation> or a comparable product by one of the following:**

1. **Acme Engineering & Mfg. Corp.**
2. **Aerovent; a Twin City Fan Company.**
3. **American Coolair Corp.**
4. **Ammerman; General Resource Corp.**
5. **Breidert Air Products.**
6. **Broan Mfg. Co., Inc.**
7. **Carnes Company HVAC.**
8. **Central Blower Co.**
9. **Dayton Electric Manufacturing Co.; a division of W. W. Grainger, Inc.**
10. **Delhi Industries Inc.**
11. **Greenheck.**
12. **Hartzell Fan, Inc.**

13. **JencoFan; Div. of Breidert Air Products.**

14. **Loren Cook Company.**

15. **NuTone Inc.**

16. **Penn Ventilation.**

17. **Quietaire Corporation.**

18. **<Insert manufacturer's name.>**

D. **Description: Direct- or belt-driven centrifugal fans consisting of housing, wheel, fan shaft, bearings, motor and disconnect switch, drive assembly, curb base, and accessories.**

E. **Housing: Removable, [spun-aluminum, dome top and outlet baffle] [extruded-aluminum, rectangular top] [galvanized steel, mushroom-domed top]; square, one-piece, aluminum base with venturi inlet cone.**

1. **Hinged Subbase: Galvanized-steel hinged arrangement permitting service and maintenance.**

F. **Fan Wheels: Aluminum hub and wheel with backward-inclined blades.**

G. **Belt-Driven Drive Assembly: Resiliently mounted to housing, with the following features:**

1. **Fan Shaft: Turned, ground, and polished steel; keyed to wheel hub.**

2. **Shaft Bearings: Permanently lubricated, permanently sealed, self-aligning ball bearings.**

3. **Pulleys: Cast-iron, adjustable-pitch motor pulley.**

4. **Fan and motor isolated from exhaust airstream.**

H. **Accessories:**

1. **Disconnect Switch: Nonfusible type, with thermal-overload protection mounted [inside] [outside] fan housing, factory wired through an internal aluminum conduit.**

2. **Bird Screens: Removable, 1/2-inch mesh, aluminum or brass wire.**

3. **Dampers: Counterbalanced, parallel-blade, backdraft dampers mounted in curb base; factory set to close when fan stops.**

4. **Motorized Dampers: Parallel-blade dampers mounted in curb base with electric actuator; wired to close when fan stops.**

I. **Roof Curbs: Galvanized steel; mitered and welded corners; 1-1/2-inch-) thick, rigid, fiberglass insulation adhered to inside walls; and 1-1/2-inch wood nailer. Size as required to suit roof opening and fan base.**

1. **Configuration: [Self-flashing without a cant strip, with mounting flange] [Built-in cant and mounting flange] [Built-in raised cant and mounting flange].**

2. **Overall Height: [**8 inches**] [**9-1/2 inches**] [**12 inches**] [**16 inches**] [**18 inches**].**

3. **Sound Curb: Curb with sound-absorbing insulation matrix.**

4. **Pitch Mounting: Manufacture curb for roof slope.**

5. **Metal Liner: Galvanized steel.**

6. **Burglar Bars: [**1/2-inch-**] [**5/8-inch-**] [**3/4-inch-**] thick steel bars welded in place to form 6-inch squares.**

7. **Mounting Pedestal: Galvanized steel with removable access panel.**

8. **Vented Curb: Unlined with louvered vents in vertical sides.**

2.2 *CENTRIFUGAL WALL VENTILATORS*

A. **Available Manufacturers: Subject to compliance with requirements, manufacturers offering products that may be incorporated into the Work include, but are not limited to, the following:**

B. **Manufacturers: Subject to compliance with requirements, provide products by one of the following:**

C. **Basis-of-Design Product: Subject to compliance with requirements, provide [the product indicated on Drawings] <Insert manufacturer's name; product name or designation> or a comparable product by one of the following:**

1. **Acme Engineering & Mfg. Corp.**

2. **Aerovent; a Twin City Fan Company.**

3. **American Coolair Corp.**

4. **Ammerman; General Resource Corp.**

5. **Breidert Air Products.**

6. **Broan Mfg. Co., Inc.**

7. **Carnes Company HVAC.**

8. **Dayton Electric Manufacturing Co.; a division of W. W. Grainger, Inc.**

9. **Greenheck.**

10. **Hartzell Fan, Inc.**

11. **JencoFan; Div. of Breidert Air Products.**

12. **Loren Cook Company.**

13. **NuTone Inc.**

14. **Penn Ventilation.**

15. **<Insert manufacturer's name.>**

D. **Description: Direct- or belt-driven centrifugal fans consisting of housing, wheel, fan shaft, bearings, motor and disconnect switch, drive assembly, and accessories.**

E. **Housing: Heavy-gage, removable, spun-aluminum, dome top and outlet baffle; venturi inlet cone.**

F. **Fan Wheel: Aluminum hub and wheel with backward-inclined blades.**

G. **Belt-Driven Drive Assembly: Resiliently mounted to housing, with the following features:**

1. **Fan Shaft: Turned, ground, and polished steel; keyed to wheel hub.**

2. **Shaft Bearings: Permanently lubricated, permanently sealed, self-aligning ball bearings.**

3. **Pulleys: Cast-iron, adjustable-pitch motor pulley.**

4. **Fan and motor isolated from exhaust airstream.**

H. **Accessories:**

1. **Disconnect Switch: Nonfusible type, with thermal-overload protection mounted inside fan housing, factory wired through internal aluminum conduit.**

2. **Bird Screens: Removable, 1/2-inch mesh, aluminum or brass wire.**

3. **Wall Grille: Ring type for flush mounting.**

4. **Dampers: Counterbalanced, parallel-blade, backdraft dampers mounted in wall sleeve; factory set to close when fan stops.**

5. **Motorized Dampers: Parallel-blade dampers mounted in curb base with electric actuator; wired to close when fan stops.**

2.3 *CEILING-MOUNTING VENTILATORS*

A. **Available Manufacturers: Subject to compliance with requirements, manufacturers offering products that may be incorporated into the Work include, but are not limited to, the following:**

B. **Manufacturers: Subject to compliance with requirements, provide products by one of the following:**

C. **Basis-of-Design Product: Subject to compliance with requirements, provide [the product indicated on Drawings] <Insert manufacturer's name; product name or designation> or a comparable product by one of the following:**

1. **American Coolair Corp.**

2. **Ammerman; General Resource Corp.**

3. **Breidert Air Products.**

4. **Broan Mfg. Co., Inc.**

5. **Carnes Company HVAC.**

6. **Dayton Electric Manufacturing Co.; a division of W. W. Grainger, Inc.**

7. **FloAire.**

8. **Greenheck.**

9. **JencoFan; Div. of Breidert Air Products.**

10. **Loren Cook Company.**

11. **NuTone Inc.**

12. **Penn Ventilation.**

13. **<Insert manufacturer's name.>**

D. **Description: Centrifugal fans designed for installing in ceiling or wall or for concealed in-line applications.**

E. **Housing: Steel, lined with acoustical insulation.**

F. **Fan Wheel: Centrifugal wheels directly mounted on motor shaft. Fan shrouds, motor, and fan wheel shall be removable for service.**

G. **Grille: [Plastic] [Stainless steel] [Aluminum] [Painted aluminum], louvered grille with flange on intake and thumbscrew attachment to fan housing.**

H. **Electrical Requirements: Junction box for electrical connection on housing and receptacle for motor plug-in.**

I. **Accessories:**

1. **Manual Starter Switch: Single-pole rocker switch assembly with cover and pilot light.**

2. **Time-Delay Switch: Assembly with single-pole rocker switch, timer, and cover plate.**

3. **Motion Sensor: Motion detector with adjustable shutoff timer.**

4. **Ceiling Radiation Damper: Fire-rated assembly with ceramic blanket, stainless-steel springs, and fusible link.**

5. **Filter: Washable aluminum to fit between fan and grille.**

6. **Isolation: Rubber-in-shear vibration isolators.**

7. **Manufacturer's standard roof jack or wall cap, and transition fittings.**

2.4 *IN-LINE CENTRIFUGAL FANS*

A. **Available Manufacturers: Subject to compliance with requirements, manufacturers offering products that may be incorporated into the Work include, but are not limited to, the following:**

B. **Manufacturers: Subject to compliance with requirements, provide products by one of the following:**

C. **Basis-of-Design Product: Subject to compliance with requirements, provide [the product indicated on Drawings] <Insert manufacturer's name; product name or designation> or a comparable product by one of the following:**

1. **Acme Engineering & Mfg. Corp.**
2. **American Coolair Corp.**
3. **Ammerman; General Resource Corp.**
4. **Bayley Fans; a division of Lau Industries, Inc.**
5. **Breidert Air Products.**
6. **Carnes Company HVAC.**
7. **FloAire.**
8. **Greenheck.**
9. **Hartzell Fan, Inc.**
10. **JencoFan; Div. of Breidert Air Products.**
11. **Loren Cook Company.**
12. **Madison Manufacturing.**
13. **Penn Ventilation.**
14. **Quietaire Corporation.**
15. **<Insert manufacturer's name.>**

D. **Description: In-line, [direct] [belt]-driven centrifugal fans consisting of housing, wheel, outlet guide vanes, fan shaft, bearings, motor and disconnect switch, drive assembly, mounting brackets, and accessories.**

E. **Housing: Split, spun aluminum with aluminum straightening vanes, inlet and outlet flanges, and support bracket adaptable to floor, side wall, or ceiling mounting.**

F. **Direct-Driven Units: Motor mounted in airstream, factory wired to disconnect switch located on outside of fan housing[; with wheel, inlet cone, and motor on swing-out service door].**

G. **Belt-Driven Units: Motor mounted on adjustable base, with adjustable sheaves, enclosure around belts within fan housing, and lubricating tubes from fan bearings extended to outside of fan housing.**

H. **Fan Wheels: Aluminum, airfoil blades welded to aluminum hub.**

I. **Accessories:**

1. **Volume-Control Damper: Manually operated with quadrant lock, located in fan outlet.**

2. **Companion Flanges: For inlet and outlet duct connections.**

3. **Fan Guards: 1/2- by 1-inch mesh of galvanized steel in removable frame. Provide guard for inlet or outlet for units not connected to ductwork.**

4. **Motor and Drive Cover (Belt Guard): Epoxy-coated steel.**

2.5 *MOTORS*

A. **Comply with requirements in Division 23 Section "Common Motor Requirements for HVAC Equipment."**

B. **Enclosure Type: Totally enclosed, fan cooled.**

PART 3 - EXECUTION

3.1 *INSTALLATION*

A. **Install power ventilators level and plumb.**

B. **Support units using [elastomeric mounts] [restrained elastomeric mounts] [spring isolators] [restrained spring isolators] <Insert de-**

vice> having a static deflection of [1 inch**] <Insert deflection>. Vibration- and seismic-control devices are specified in Division 23 Section "Vibration and Seismic Controls for HVAC Piping and Equipment."**

1. **Secure vibration and seismic controls to concrete bases using anchor bolts cast in concrete base.**

C. **Install floor-mounting units on concrete bases. Concrete, reinforcement, and formwork requirements are specified in Division 03 Section "Cast-in-Place Concrete."**

D. **Secure roof-mounting fans to roof curbs with cadmium-plated hardware. Refer to Division 07 Section "Roof Accessories" for installation of roof curbs.**

E. **Ceiling Units: Suspend units from structure; use steel wire or metal straps.**

F. **Support suspended units from structure using threaded steel rods and [elastomeric hangers] [spring hangers] [spring hangers with vertical-limit stops] <Insert device> having a static deflection of [**1 inch**] <Insert deflection>. Vibration-control devices are specified in Division 23 Section "Vibration and Seismic Controls for HVAC Piping and Equipment."**

G. **Install units with clearances for service and maintenance.**

H. **Label units according to requirements specified in Division 23 Section "Identification for HVAC Piping and Equipment."**

I. **Duct installation and connection requirements are specified in other Division 23 Sections. Drawings indicate general arrangement of ducts and duct accessories. Make final duct connections with flexible connectors. Flexible connectors are specified in Division 23 Section "Air Duct Accessories."**

J. **Install ducts adjacent to power ventilators to allow service and maintenance.**

K. **Ground equipment according to Division 26 Section "Grounding and Bonding for Electrical Systems."**

L. **Connect wiring according to Division 26 Section "Low-Voltage Electrical Power Conductors and Cables."**

3.2 *FIELD QUALITY CONTROL*

A. **Perform the following field tests and inspections and prepare test reports:**

1. **Verify that shipping, blocking, and bracing are removed.**

2. **Verify that unit is secure on mountings and supporting devices and that connections to ducts and electrical components are complete. Verify that proper thermal-overload protection is installed in motors, starters, and disconnect switches.**

3. **Verify that cleaning and adjusting are complete.**

4. **Disconnect fan drive from motor, verify proper motor rotation direction, and verify fan wheel free rotation and smooth bearing operation. Reconnect fan drive system, align and adjust belts, and install belt guards.**

5. **Adjust belt tension.**

6. **Adjust damper linkages for proper damper operation.**

7. **Verify lubrication for bearings and other moving parts.**

8. **Verify that manual and automatic volume control and fire and smoke dampers in connected ductwork systems are in fully open position.**

9. **Disable automatic temperature-control operators, energize motor and adjust fan to indicated rpm, and measure and record motor voltage and amperage.**

10. **Shut unit down and reconnect automatic temperature-control operators.**

11. **Remove and replace malfunctioning units and retest as specified above.**

B. **Test and adjust controls and safeties. Replace damaged and malfunctioning controls and equipment.**

END OF SECTION 233423

SECTION 233713 - DIFFUSERS, REGISTERS, AND GRILLES

PART 1 - GENERAL

1.1 *SUMMARY*

A. **Section Includes:**

1. **Round ceiling diffusers.**
2. **Rectangular and square ceiling diffusers.**
3. **Perforated diffusers.**
4. **Louver face diffusers.**
5. **Linear bar diffusers.**
6. **Linear slot diffusers.**
7. **Adjustable bar [registers] [grilles] [registers and grilles].**
8. **Fixed face [registers] [grilles] [registers and grilles].**
9. **Linear bar grilles.**

B. **Related Sections:**

1. **Division 08 Section "Louvers and Vents" for fixed and adjustable louvers and wall vents, whether or not they are connected to ducts.**
2. **Division 23 Section "Air Duct Accessories" for fire and smoke dampers and volume-control dampers not integral to diffusers, registers, and grilles.**

1.2 *SUBMITTALS*

A. **Product Data: For each type of product indicated, include the following:**

1. **Data Sheet: Indicate materials of construction, finish, and mounting details; and performance data including throw and drop, static-pressure drop, and noise ratings.**

2. **Diffuser, Register, and Grille Schedule: Indicate drawing designation, room location, quantity, model number, size, and accessories furnished.**

B. **Samples: For each exposed product and for each color and texture specified.**

PART 2 - PRODUCTS

2.1 *CEILING DIFFUSERS*

A. **Round Ceiling Diffuser <Insert drawing designation>:**

1. **Manufacturers: Subject to compliance with requirements, [provide products by one of the following] [available manufacturers offering products that may be incorporated into the Work include, but are not limited to, the following]:**

2. **Basis-of-Design Product: Subject to compliance with requirements, provide [product indicated on Drawings] <Insert manufacturer's name; product name or designation> or comparable product by one of the following:**

   a. ***Anemostat Products; a Mestek company.***

   b. ***Carnes.***

   c. ***Hart & Cooley Inc.***

   d. ***METALAIRE, Inc.***

   e. ***Nailor Industries Inc.***

   f. ***Price Industries.***

   g. ***Titus.***

h. ***Tuttle & Bailey.***

i. ***<Insert manufacturer's name>.***

3. **Devices shall be specifically designed for variable-air-volume flows.**

4. **Material: [Steel] [Aluminum].**

5. **Finish: [Baked enamel, white] [Baked enamel, color selected by Architect] [Anodized aluminum] <Insert finish>.**

6. **Face Style: [Four] [Three] [Two] cone.**

7. **Mounting: Duct connection.**

8. **Pattern: [Fully adjustable] [Two-position horizontal].**

9. **Dampers: [Radial opposed blade] [Butterfly] [Combination damper and grid].**

10. **Accessories:**

    a. ***Equalizing grid.***

    b. ***Plaster ring.***

    c. ***Safety chain.***

    d. ***Wire guard.***

    e. ***Sectorizing baffles.***

    f. ***Operating rod extension.***

B. **Rectangular and Square Ceiling Diffusers <Insert drawing designation>:**

1. **Manufacturers: Subject to compliance with requirements, [provide products by one of the following] [available manufacturers offering products that may be incorporated into the Work include, but are not limited to, the following]:**

2. **Basis-of-Design Product: Subject to compliance with requirements, provide [product indicated on Drawings] <Insert manufacturer's name; product name or designation> or comparable product by one of the following:**

   a. ***A-J Manufacturing Co., Inc.***

   b. ***Anemostat Products; a Mestek company.***

   c. ***Carnes.***

   d. ***Hart & Cooley Inc.***

   e. ***Krueger.***

   f. ***METALAIRE, Inc.***

   g. ***Nailor Industries Inc.***

   h. ***Price Industries.***

   i. ***Titus.***

   j. ***Tuttle & Bailey.***

   k. ***<Insert manufacturer's name>.***

3. **Devices shall be specifically designed for variable-air-volume flows.**

4. **Material: [Steel] [Aluminum].**

5. **Finish: [Baked enamel, white] [Baked enamel, color selected by Architect] [Anodized aluminum] <Insert finish>.**

6. **Face Size: [**24 by 24 inches**] [**20 by 20 inches**] [**12 by 12 inches**] <Insert dimensions>.**

7. **Face Style: [Three cone] [Four cone] [Plaque].**

8. **Mounting: [Surface] [T-bar] [Snap in] [Spline] [Mounting panel].**

9. **Pattern: [Fixed] [Two position] [Adjustable].**

10. **Dampers: [Radial opposed blade] [Butterfly] [Combination damper and grid].**

11. **Accessories:**

    a. ***Equalizing grid.***

    b. ***Plaster ring.***

    c. ***Safety chain.***

    d. ***Wire guard.***

    e. ***Sectorizing baffles.***

    f. ***Operating rod extension.***

C. **Perforated Diffuser <Insert drawing designation>:**

1. **Manufacturers: Subject to compliance with requirements, [provide products by one of the following] [available manufacturers offering products that may be incorporated into the Work include, but are not limited to, the following]:**

2. **Basis-of-Design Product: Subject to compliance with requirements, provide [product indicated on Drawings] <Insert manufacturer's name; product name or designation> or comparable product by one of the following:**

    a. ***Air Research Diffuser Products, Inc.***

    b. ***A-J Manufacturing Co., Inc.***

    c. ***Anemostat Products; a Mestek company.***

    d. ***Carnes.***

    e. ***Hart & Cooley Inc.***

    f. ***Krueger.***

g. ***METALAIRE, Inc.***

h. ***Nailor Industries Inc.***

i. ***Price Industries.***

j. ***Titus.***

k. ***Tuttle & Bailey.***

l. ***Warren Technology.***

m. ***<Insert manufacturer's name>.***

3. **Devices shall be specifically designed for variable-air-volume flows.**

4. **Material: Steel backpan and pattern controllers, with [steel] [aluminum] face.**

5. **Finish: [Baked enamel, white] [Baked enamel, color selected by Architect] [Anodized aluminum] <Insert finish>.**

6. **Face Size: [**12 by 12 inches**] [**24 by 12 inches**] [**36 by 12 inches**] [**48 by 12 inches**] [**16 by 16 inches**] [**20 by 20 inches**] [**24 by 24 inches**] [**36 by 24 inches**] [**48 by 24 inches**] <Insert dimensions>.**

7. **Duct Inlet: [Round] [Square].**

8. **Face Style: [Flush] [Drop extended].**

9. **Mounting: [Surface] [T-bar] [Snap in] [Spline] [Mounting panel].**

10. **Pattern Controller: [Four louvered deflector patches] [Fixed with curved blades at inlet] [Adjustable with louvered pattern modules at inlet] [None].**

11. **Dampers: [Opposed blade] [Radial opposed blade] [Butterfly] [Combination damper and grid] [Combination volume and fire].**

12. **Accessories:**

a. ***Equalizing grid.***

b. ***Plaster ring.***

c. ***Safety chain.***

d. ***Wire guard.***

e. ***Sectorizing baffles.***

f. ***Operating rod extension.***

D. **Louver Face Diffuser <Insert drawing designation>:**

1. **Manufacturers: Subject to compliance with requirements, [provide products by one of the following] [available manufacturers offering products that may be incorporated into the Work include, but are not limited to, the following]:**

2. **Basis-of-Design Product: Subject to compliance with requirements, provide [product indicated on Drawings] <Insert manufacturer's name; product name or designation> or comparable product by one of the following:**

a. ***A-J Manufacturing Co., Inc.***

b. ***Anemostat Products; a Mestek company.***

c. ***Carnes.***

d. ***METALAIRE, Inc.***

e. ***Nailor Industries Inc.***

f. ***Price Industries.***

g. ***Titus.***

h. ***Tuttle & Bailey.***

i. ***<Insert manufacturer's name>.***

3. **Devices shall be specifically designed for variable-air-volume flows.**

4. **Material: [Steel] [Aluminum].**

5. **Finish: [Baked enamel, white] [Baked enamel, color selected by Architect] [Anodized aluminum] <Insert finish>.**

6. **Face Size: <Insert** inches**>.**

7. **Mounting: [Surface] [Surface with beveled frame] [T-bar] [Snap in] [Spline] [Mounting panel].**

8. **Pattern: [One-way] [Two-way] [Two-way corner] [Three-way] [Four-way] [Adjustable] <Insert pattern> core style.**

9. **Dampers: [Radial opposed blade] [Butterfly] [Combination damper and grid].**

10. **Accessories:**

    a. ***Square to round neck adaptor.***

    b. ***Adjustable pattern vanes.***

    c. ***Throw reducing vanes.***

    d. ***Equalizing grid.***

    e. ***Plaster ring.***

    f. ***Safety chain.***

    g. ***Wire guard.***

    h. ***Sectorizing baffles.***

    i. ***Operating rod extension.***

2.2 *CEILING LINEAR SLOT OUTLETS*

A. Linear Bar Diffuser <Insert drawing designation>:

1. **Manufacturers: Subject to compliance with requirements, [provide products by one of the following] [available manufacturers offering products that may be incorporated into the Work include, but are not limited to, the following]:**

2. **Basis-of-Design Product: Subject to compliance with requirements, provide [product indicated on Drawings] <Insert manufacturer's name; product name or designation> or comparable product by one of the following:**

    a. ***Air Research Diffuser Products, Inc.***

    b. ***Anemostat Products; a Mestek company.***

    c. ***Carnes.***

    d. ***Dayus Register & Grille Inc.***

    e. ***Hart & Cooley Inc.***

    f. ***Krueger.***

    g. ***METALAIRE, Inc.***

    h. ***Nailor Industries Inc.***

    i. ***Price Industries.***

    j. ***Titus.***

    k. ***Tuttle & Bailey.***

    l. ***<Insert manufacturer's name>.***

3. **Devices shall be specifically designed for variable-air-volume flows.**

4. **Material: [Steel] [Aluminum] [Stainless steel].**

5. **Finish: [Baked enamel, white] [Baked enamel, color selected by Architect] <Insert finish>.**

6. **Narrow Core Spacing Arrangement: 1/8-inch- thick blades spaced 1/4 inch apart, [zero] [15]-degree deflection.**

7. **Wide Core Spacing Arrangement: 1/8-inch- thick blades spaced 1/2 inch apart, [zero] [15]-degree deflection.**

8. **Wide Core Spacing Arrangement: 3/16-inch- thick blades spaced 1/2 inch apart, [zero] [15] [30]-degree deflection.**

9. **Pencil-Proof Core Spacing Arrangement: 3/16-inch- thick blades spaced 7/16 inch) apart, [zero] [15] [30]-degree deflection.**

10. **[One] [Two]-Way Deflection Vanes: Extruded construction fixed louvers with removable core.**

11. **Frame: [**1-1/4 inches**] [**1 inch**] [**3/4 inch**] [**1/2 inch**] [**3/16 inch**] wide.**

12. **Mounting Frame: [Filter] <Insert frame size and style>.**

13. **Mounting: [Countersunk screw] [Concealed bracket] [Spring clip].**

14. **Damper Type: [Adjustable opposed-blade assembly] [Hinged single blade].**

15. **Accessories: [Plaster frame] [Directional vanes] [Alignment pins] [Core clips] [Blank-off strips].**

B. **Linear Slot Diffuser <Insert drawing designation>:**

1. **Manufacturers: Subject to compliance with requirements, [provide products by one of the following] [available manufacturers offering products that may be incorporated into the Work include, but are not limited to, the following]:**

2. **Basis-of-Design Product: Subject to compliance with requirements, provide [product indicated on Drawings] <Insert manufacturer's name; product name or designation> or comparable product by one of the following:**

   a. ***Air Research Diffuser Products, Inc.***

b. ***Anemostat Products; a Mestek company.***

c. ***Carnes.***

d. ***Hart & Cooley Inc.***

e. ***Krueger.***

f. ***METALAIRE, Inc.***

g. ***Nailor Industries Inc.***

h. ***Price Industries.***

i. ***Titus.***

j. ***Tuttle & Bailey.***

k. ***<Insert manufacturer's name>.***

3. **Devices shall be specifically designed for variable-air-volume flows.**

4. **Material - Shell: [Steel] [Aluminum], [insulated] [noninsulated].**

5. **Material - Pattern Controller and Tees: Aluminum.**

6. **Finish - Face and Shell: [Baked enamel, black] <Insert finish>.**

7. **Finish - Pattern Controller: [Baked enamel, black] <Insert finish>.**

8. **Finish - Tees: [Baked enamel, white] [Baked enamel, color selected by Architect] <Insert finish>.**

9. **Slot Width: [**1/2 inch**] [**3/4 inch**] [**1 inch**] [**1-1/2 inches**].**

10. **Number of Slots: [One] [Two] [Three] [Four] <Insert number>.**

11. **Length: [**24 inches**] [**30 inches**] [**36 inches**] [**48 inches**] [**60 inches**].**

12. **Accessories: [Plaster frame] [T-bar slot] [Center notch] [T-bar on inlet side] [T-bar on both sides] [T-bar clip on one side] [T-bar clips on both sides].**

2.3 *REGISTERS AND GRILLES*

A. Adjustable Bar Register <Insert drawing designation>:

1. **Manufacturers: Subject to compliance with requirements, [provide products by one of the following] [available manufacturers offering products that may be incorporated into the Work include, but are not limited to, the following]:**

2. **Basis-of-Design Product: Subject to compliance with requirements, provide [product indicated on Drawings] <Insert manufacturer's name; product name or designation> or comparable product by one of the following:**

   a. ***A-J Manufacturing Co., Inc.***

   b. ***Anemostat Products; a Mestek company.***

   c. ***Carnes.***

   d. ***Dayus Register & Grille Inc.***

   e. ***Hart & Cooley Inc.***

   f. ***Krueger.***

   g. ***METALAIRE, Inc.***

   h. ***Nailor Industries Inc.***

   i. ***Price Industries.***

   j. ***Titus.***

   k. ***Tuttle & Bailey.***

   l. ***<Insert manufacturer's name>.***

3. **Material: [Steel] [Aluminum] [Stainless steel].**

4. **Finish: [Baked enamel, white] [Baked enamel, color selected by Architect] <Insert finish>.**

5. **Face Blade Arrangement: [Horizontal] [Vertical] spaced [**3 inches**] [**1-1/2 inches**] [**3/4 inch**] [**1/2 inch**] apart.**

6. **Core Construction: [Integral] [Removable].**

7. **Rear-Blade Arrangement: [Horizontal] [Vertical] spaced [**3/4 inch**] [**1/2 inch**] apart.**

8. **Frame: [**1-1/4 inches**] [**1 inch**] wide.**

9. **Mounting Frame: [Filter] <Insert frame size and style>.**

10. **Mounting: [Countersunk screw] [Concealed] [Lay in].**

11. **Damper Type: [Adjustable opposed blade] [NRTL listed, opposed blade, spring closing, and with fusible link for** 160 deg F**].**

12. **Accessories:**

    a. ***[Front] [Rear]-blade gang operator.***

    b. ***Filter.***

B. **Adjustable Bar Grille <Insert drawing designation>:**

1. **Manufacturers: Subject to compliance with requirements, [provide products by one of the following] [available manufacturers offering products that may be incorporated into the Work include, but are not limited to, the following]:**

2. **Basis-of-Design Product: Subject to compliance with requirements, provide [product indicated on Drawings] <Insert manufacturer's name; product name or designation> or comparable product by one of the following:**

    a. ***A-J Manufacturing Co., Inc.***

b. ***Anemostat Products; a Mestek company.***

c. ***Carnes.***

d. ***Dayus Register & Grille Inc.***

e. ***Hart & Cooley Inc.***

f. ***Krueger.***

g. ***METALAIRE, Inc.***

h. ***Nailor Industries Inc.***

i. ***Price Industries.***

j. ***Titus.***

k. ***Tuttle & Bailey.***

l. ***<Insert manufacturer's name>.***

3. **Material: [Steel] [Aluminum] [Stainless steel].**

4. **Finish: [Baked enamel, white] [Baked enamel, color selected by Architect] <Insert finish>.**

5. **Face Blade Arrangement: [Horizontal] [Vertical] spaced [**3 inches**] [**1-1/2 inches**] [**3/4 inch**] [**1/2 inch**] apart.**

6. **Core Construction: [Integral] [Removable].**

7. **Rear-Blade Arrangement: [Horizontal] [Vertical] spaced [**3/4 inch**] [**1/2 inch**] apart.**

8. **Frame: [**1-1/4 inches**] [**1 inch**] wide.**

9. **Mounting Frame: [Filter] <Insert frame size and style>.**

10. **Mounting: [Countersunk screw] [Concealed] [Lay in].**

C. **Fixed Face Register <Insert drawing designation>:**

1. **Manufacturers: Subject to compliance with requirements, [provide products by one of the following] [available manufacturers offering products that may be incorporated into the Work include, but are not limited to, the following]:**

2. **Basis-of-Design Product: Subject to compliance with requirements, provide [product indicated on Drawings] <Insert manufacturer's name; product name or designation> or comparable product by one of the following:**

   a. ***A-J Manufacturing Co., Inc.***

   b. ***Anemostat Products; a Mestek company.***

   c. ***Carnes.***

   d. ***Dayus Register & Grille Inc.***

   e. ***Hart & Cooley Inc.***

   f. ***Krueger.***

   g. ***Nailor Industries Inc.***

   h. ***Price Industries.***

   i. ***Titus.***

   j. ***Tuttle & Bailey.***

   k. ***<Insert manufacturer's name>.***

3. **Material: [Steel] [Aluminum].**

4. **Finish: [Baked enamel, white] [Baked enamel, color selected by Architect] <Insert finish>.**

5. **Face Arrangement: [**1/2-by-1/2-by-1/2-inch **grid] [Perforated] core.**

6. **Core Construction: [Integral] [Removable].**

7. **Frame: [**1-1/4 inches**] [**1 inch**] wide.**

8. **Mounting Frame: [Filter] <Insert frame size and style>.**

9. **Mounting: [Countersunk screw] [Concealed] [Lay in].**

10. **Damper Type: [Adjustable opposed blade] [NRTL listed, opposed blade, spring closing, and with fusible link for** 160 deg F**].**

11. **Accessory: Filter.**

D. **Fixed Face Grille <Insert drawing designation>:**

1. **Manufacturers: Subject to compliance with requirements, [provide products by one of the following] [available manufacturers offering products that may be incorporated into the Work include, but are not limited to, the following]:**

2. **Basis-of-Design Product: Subject to compliance with requirements, provide [product indicated on Drawings] <Insert manufacturer's name; product name or designation> or comparable product by one of the following:**

   a. ***A-J Manufacturing Co., Inc.***

   b. ***Anemostat Products; a Mestek company.***

   c. ***Carnes.***

   d. ***Dayus Register & Grille Inc.***

   e. ***Hart & Cooley Inc.***

   f. ***Krueger.***

   g. ***Nailor Industries Inc.***

   h. ***Price Industries.***

   i. ***Titus.***

   j. ***Tuttle & Bailey.***

k. ***<Insert manufacturer's name>.***

3. **Material: [Steel] [Aluminum].**

4. **Finish: [Baked enamel, white] [Baked enamel, color selected by Architect] <Insert finish>.**

5. **Face Arrangement: [**1/2-by-1/2-by-1/2-inch **grid] [Perforated] core.**

6. **Core Construction: [Integral] [Removable].**

7. **Frame: [**1-1/4 inches**] [**1 inch**] wide.**

8. **Mounting Frame: [Filter] <Insert frame size and style>.**

9. **Mounting: [Countersunk screw] [Concealed] [Lay in].**

10. **Accessory: Filter.**

E. **Linear Bar Grille <Insert drawing designation>:**

1. **Manufacturers: Subject to compliance with requirements, [provide products by one of the following] [available manufacturers offering products that may be incorporated into the Work include, but are not limited to, the following]:**

2. **Basis-of-Design Product: Subject to compliance with requirements, provide [product indicated on Drawings] <Insert manufacturer's name; product name or designation> or comparable product by one of the following:**

   a. ***A-J Manufacturing Co., Inc.***

   b. ***Anemostat Products; a Mestek company.***

   c. ***Carnes.***

   d. ***Dayus Register & Grille Inc.***

   e. ***Hart & Cooley Inc.***

f. ***Krueger.***

g. ***Nailor Industries Inc.***

h. ***Price Industries.***

i. ***Titus.***

j. ***Tuttle & Bailey.***

k. ***<Insert manufacturer's name>.***

3. **Material: [Steel] [Aluminum].**

4. **Finish: [Baked enamel, white] [Baked enamel, color selected by Architect] <Insert finish>.**

5. **Face Arrangement: [**1/2-by-1/2-by-1/2-inch **grid] [Perforated] core.**

6. **Distribution plenum.**

   a. ***Internal insulation.***

   b. ***Inlet damper.***

7. **Frame: [**1-1/4 inches**] [**1 inch**] wide.**

8. **Mounting Frame: [Filter] <Insert frame size and style>.**

9. **Mounting: [Countersunk screw] [Concealed] [Lay in].**

10. **Damper Type: [Adjustable opposed blade] [NRTL listed, opposed blade, spring closing, and with fusible link for** 160 deg F**].**

2.4 *SOURCE QUALITY CONTROL*

A. **Verification of Performance: Rate diffusers, registers, and grilles according to ASHRAE 70, "Method of Testing for Rating the Performance of Air Outlets and Inlets."**

PART 3 - EXECUTION

3.1 *INSTALLATION*

A. **Install diffusers, registers, and grilles level and plumb.**

B. **Ceiling-Mounted Outlets and Inlets: Drawings indicate general arrangement of ducts, fittings, and accessories. Air outlet and inlet locations have been indicated to achieve design requirements for air volume, noise criteria, airflow pattern, throw, and pressure drop. Make final locations where indicated, as much as practical. For units installed in lay-in ceiling panels, locate units in the center of panel. Where architectural features or other items conflict with installation, notify Architect for a determination of final location.**

C. **Install diffusers, registers, and grilles with airtight connections to ducts and to allow service and maintenance of dampers, air extractors, and fire dampers.**

3.2 *ADJUSTING*

A. **After installation, adjust diffusers, registers, and grilles to air patterns indicated, or as directed, before starting air balancing.**

END OF SECTION 233713

SECTION 236200 - PACKAGED COMPRESSOR AND CONDENSER UNITS

PART 1 - GENERAL

1.1 *SUMMARY*

A. **This Section includes air-cooled condensing units.**

1.2 *SUBMITTALS*

A. **Product Data: For each type of product indicated.**

B. **Wiring diagrams.**

C. **Operation and maintenance data.**

D. **LEED Submittal:**

1. **Product Data for Credit EA 4: Documentation required by Credit EA 4 indicating that equipment and refrigerants comply.**

1.3 *QUALITY ASSURANCE*

A. **Electrical Components, Devices, and Accessories: Listed and labeled as defined in NFPA 70, Article 100, by a testing agency acceptable to authorities having jurisdiction, and marked for intended use.**

B. **Fabricate and label refrigeration system according to ASHRAE 15, "Safety Code for Mechanical Refrigeration."**

C. **ASHRAE/IESNA 90.1-2004 Compliance: Applicable requirements in ASHRAE/IESNA 90.1-2004, Section 6 - "Heating, Ventilating, and Air-Conditioning."**

1.4 *WARRANTY*

A. **Special Warranty: Manufacturer's standard form in which manufacturer agrees to repair or replace components of condensing units**

that fail in materials or workmanship within specified warranty period.

1. **Warranty Period (Compressor Only): [Five] [10] <Insert number> years from date of Substantial Completion.**

2. **Warranty Period (Condenser Coil Only): [Five] <Insert number> years from date of Substantial Completion.**

PART 2 - PRODUCTS

2.1 *MANUFACTURERS*

A. **In other Part 2 articles where titles below introduce lists, the following requirements apply to product selection:**

1. **Available Manufacturers: Subject to compliance with requirements, manufacturers offering products that may be incorporated into the Work include, but are not limited to, manufacturers specified.**

2. **Manufacturers: Subject to compliance with requirements, provide products by one of the manufacturers specified.**

2.2 *CONDENSING UNITS, AIR COOLED, 1 TO 5 TONS (3.5 TO 17.6 kW)*

A. **[Available]Manufacturers:**

1. **Carrier Corporation; Carrier Air Conditioning Div.**

2. **Lennox Industries Inc.**

3. **Rheem Manufacturing Air Conditioning Div.**

4. **Trane Co. (The); Worldwide Applied Systems Group.**

5. **Weatherking Air Conditioning Div.**

6. **York International Corp.**

7. **<Insert manufacturer's name.>**

B. **Description: Factory assembled and tested, consisting of compressor, condenser coil, fan, motors, refrigerant reservoir, and operating controls.**

C. **Compressor: Scroll, hermetically sealed, with rubber vibration isolators.**

1. **Motor: [Single] [Two] speed, and includes thermal- and current-sensitive overload devices, start capacitor, relay, and contactor.**

2. **Two-Speed Compressor: Include manual-reset, high-pressure switch and automatic-reset, low-pressure switch.**

3. **Accumulator: Suction tube.**

4. **Refrigerant Charge: [R-407C] [R-410A] <Insert type>.**

5. **Refrigerant: R-407C or R-410A.**

D. **Condenser Coil: Seamless copper-tube, aluminum-fin coil; circuited for integral liquid subcooler, with removable drain pan and brass service valves with service ports.**

E. **Condenser Fan: Direct-drive, aluminum propeller fan; with permanently lubricated, totally enclosed fan motor with thermal-overload protection[and ball bearings].**

F. **Accessories:**

1. **Coastal Filter: Mesh screen to protect condenser coil from salt damage.**

2. **Crankcase heater.**

3. **Cycle Protector: Automatic-reset timer to prevent rapid compressor cycling.**

4. **Electronic programmable thermostat to control condensing unit and evaporator fan.**

5. **Evaporator Freeze Thermostat: Temperature-actuated switch that stops unit when evaporator reaches freezing temperature.**

6. **Filter-dryer.**

7. **High-Pressure Switch: Automatic-reset switch cycles compressor off on high refrigerant pressure.**

8. **Liquid-line solenoid.**

9. **Low Ambient Controller: Cycles condenser fan to permit operation down to 0 deg F (minus 18 deg C).**

10. **Low-Pressure Switch: Automatic-reset switch cycles compressor off on low refrigerant pressure.**

11. **PE mounting base to provide a permanent foundation.**

12. **Precharged and insulated suction and liquid tubing.**

13. **Sound Hood: Wraps around sound attenuation cover for compressor.**

14. **Thermostatic expansion valve.**

15. **Time-Delay Relay: Continues operation of evaporator fan after compressor shuts off.**

16. **<Insert accessories.>**

G. **Unit Casing: Galvanized steel, finished with baked enamel; with removable panels for access to controls, weep holes for water drainage, and mounting holes in base. Mount service valves, fittings, and gage ports on exterior of casing.**

H. **Verification of Performance: Rate condensing units according to ARI 210/240.**

2.3 *CONDENSING UNITS, AIR COOLED, 6 TO 120 TONS (21 TO 422 kW)*

A. **[Available]Manufacturers:**

1. **Carrier Corporation; Carrier Air Conditioning Div.**

2. **Continental Products.**

3. **Engineered Air.**

4. **Lennox Industries Inc.**

5. **McQuay International.**

6. **Rheem Manufacturing Air Conditioning Div.**

7. **Trane Co. (The); Worldwide Applied Systems Group.**

8. **York International Corp.**

9. **<Insert manufacturer's name.>**

B. **Description: Factory assembled and tested, air cooled; consisting of casing, compressors, condenser coils, condenser fans and motors, and unit controls.**

C. **Compressor: Hermetic or semihermetic compressor designed for service with crankcase sight glass, crankcase heater, and backseating service access valves on suction and discharge ports.**

1. **Capacity Control: [Cylinder unloading] [Hot-gas bypass].**

2. **Refrigerant Charge: [R-407C] [R-410A] [HFC-134a] <Insert type>.**

3. **Refrigerant: R-134a, R-407C, or R-410A.**

D. **Condenser Coil: Seamless copper-tube, aluminum-fin coil, including subcooling circuit and backseating liquid-line service access valve. Factory pressure test coils, then dehydrate by drawing a vacuum and fill with a holding charge of nitrogen or refrigerant.**

E. **Condenser Fans: Propeller-type vertical discharge; either directly or belt driven. Include the following:**

1. **Permanently lubricated ball-bearing motors.**

2. **Separate motor for each fan.**

3. **Dynamically and statically balanced fan assemblies.**

F. **Operating and safety controls include the following:**

1. **Manual-reset, high-pressure cutout switches.**

2. **Automatic-reset, low-pressure cutout switches.**

3. **Low oil pressure cutout switch.**

4. **Compressor-winding thermostat cutout switch.**

5. **Three-leg, compressor-overload protection.**

6. **Control transformer.**

7. **Magnetic contactors for compressor and condenser fan motors.**

8. **Timer to prevent excessive compressor cycling.**

G. **Accessories:**

1. **Electronic programmable thermostat to control condensing unit and evaporator fan.**

2. **Low Ambient Controller: Cycles condenser fan to permit operation down to 0 deg F (minus 18 deg C).**

3. **Gage Panel: Package with refrigerant circuit suction and discharge gages.**

4. **Hot-gas bypass kit.**

5. **Part-winding-start timing relay, circuit breakers, and contactors.**

6. **<Insert accessories.>**

H. **Unit Casings: Designed for outdoor installation with weather protection for components and controls and with removable panels for required access to compressors, controls, condenser fans, motors, and drives. Additional features include the following:**

1. **Steel, galvanized or zinc coated, for exposed casing surfaces; treated and finished with manufacturer's standard paint coating.**

2. **Perimeter base rail with forklift slots and lifting holes to facilitate rigging.**

3. **Gasketed control panel door.**

4. **Nonfused disconnect switch, factory mounted and wired, for single external electrical power connection.**

5. **Condenser coil hail guard to protect coil from physical damage.**

I. **Verification of Performance: Rate condensing units according to ARI 340/360.**

2.4 *SOURCE QUALITY CONTROL*

A. **Verification of Performance: Rate condensing units according to ARI 210/240, ARI 340/360, or ARI 365.**

1. **Energy Efficiency: Equal to or greater than prescribed by ASHRAE/IESNA 90.1-2004, "Energy Efficient Design of New Buildings except Low-Rise Residential Buildings."**

B. **Testing Requirements: Factory test sound-power-level ratings according to ARI 270.**

PART 3 - EXECUTION

3.1 *INSTALLATION*

A. **Install units level and plumb, firmly anchored in locations indicated; maintain manufacturer's recommended clearances.**

B. **Install condensing units on concrete base. Concrete base is specified in Division 23 Section "Common Work Results for HVAC," and**

concrete materials and installation requirements are specified in Division 03.

C. **Install roof-mounting units on equipment supports specified in Division 07.**

D. **Vibration Isolation: Mount condensing units on restrained spring isolators with a minimum deflection of <Insert measurement>. Vibration isolation devices and installation requirements are specified in Division 23 Section "Vibration and Seismic Controls for HVAC Piping and Equipment."**

E. **Maintain manufacturer's recommended clearances for service and maintenance.**

F. **Connect precharged refrigerant tubing to unit's quick-connect fittings. Install tubing so it does not interfere with access to unit. Install furnished accessories.**

G. **Connect refrigerant piping to air-cooled condensing units; maintain required access to unit. Install furnished field-mounted accessories. Refrigerant piping and specialties are specified in Division 23 Section "Refrigerant Piping."**

3.2 *FIELD QUALITY CONTROL*

A. **Perform the following field tests and inspections and prepare test reports:**

1. **Perform electrical test and visual and mechanical inspection.**

2. **Leak Test: After installation, charge systems with refrigerant and oil and test for leaks. Repair leaks, replace lost refrigerant and oil, and retest until no leaks exist.**

3. **Operational Test: After electrical circuitry has been energized, start units to confirm proper operation, product capability, and compliance with requirements.**

4. **Test and adjust controls and safeties. Replace damaged and malfunctioning controls and equipment.**

5. **Verify proper airflow over coils.**

B. **Verify that vibration isolation and flexible connections properly dampen vibration transmission to structure.**

C. **Remove and replace malfunctioning condensing units and retest as specified above.**

END OF SECTION 236200

SECTION 238126 - SPLIT-SYSTEM AIR-CONDITIONERS

PART 1 - GENERAL

1.1 *SUMMARY*

A. **This Section includes split-system air-conditioning and heat pump units consisting of separate evaporator-fan and compressor-condenser components. Units are designed for exposed or concealed mounting, and may be connected to ducts.**

1.2 *SUBMITTALS*

A. **Product Data: For each unit indicated. Include performance data in terms of capacities, outlet velocities, static pressures, sound power characteristics, motor requirements, and electrical characteristics.**

B. **LEED Submittals:**

1. **Product Data for Credit EA 4: Documentation required by Credit EA 4 indicating that equipment and refrigerants comply.**

2. **Product Data for Prerequisite EQ 1: Documentation indicating that units comply with ASHRAE 62.1-2004, Section 5 - "Systems and Equipment."**

C. **Operation and maintenance data.**

1.3 *QUALITY ASSURANCE*

A. **Electrical Components, Devices, and Accessories: Listed and labeled as defined in NFPA 70, Article 100, by a testing agency acceptable to authorities having jurisdiction, and marked for intended use.**

B. **ASHRAE Compliance: Applicable requirements in ASHRAE 62.1-2004, Section 5 - "Systems and Equipment" and Section 7 - "Construction and Startup."**

C. **ASHRAE/IESNA 90.1-2004 Compliance: Applicable requirements in ASHRAE/IESNA 90.1-2004, Section 6 - "Heating, Ventilating, and Air-Conditioning."**

1.4 *WARRANTY*

A. **Special Warranty: Manufacturer's standard form in which manufacturer agrees to repair or replace split-system air-conditioning units that fail in materials and workmanship within [five] <Insert number> years from date of Substantial Completion.**

PART 2 - PRODUCTS

2.1 *MANUFACTURERS*

A. **Available Manufacturers: Subject to compliance with requirements, manufacturers offering products that may be incorporated into the Work include, but are not limited to, the following:**

B. **Manufacturers: Subject to compliance with requirements, provide products by one of the following:**

1. **Carrier Air Conditioning; Div. of Carrier Corp.**
2. **Evcon Industries, Inc.**
3. **First Co.**
4. **Friedrich Air Conditioning Company.**
5. **Koldwave, Inc.**
6. **Lennox Industries Inc.**
7. **Mitsubishi Electric Sales Canada, Inc.**
8. **Mitsubishi Electronics America, Inc.; HVAC Division.**
9. **Mitsubishi Heavy Industries America, Inc.; Air-Conditioning & Refrigeration Division, Inc.**
10. **Sanyo Fisher (U.S.A.) Corp.**

11. **Tadiran Electronic Industries Inc.; Appliance Division.**

12. **Trane Co. (The); Unitary Products Group.**

13. **York International Corp.**

14. **<Insert manufacturer's name.>**

2.2 *EVAPORATOR-FAN UNIT*

A. **Concealed Unit Chassis: Galvanized steel with flanged edges, removable panels for servicing, and insulation on back of panel.**

1. **Insulation: Faced, glass-fiber duct liner.**

2. **Drain Pans: Galvanized steel, with connection for drain; insulated[and complying with ASHRAE 62.1-2004].**

3. **Airstream Surfaces: Surfaces in contact with the airstream shall comply with requirements in ASHRAE 62.1-2004.**

B. **Floor-Mounting, Unit Cabinet: Enameled steel with removable panels on front and ends.**

1. **Discharge Grille: [Steel with surface-mounted frame] [Welded steel bars forming a linear grille and welded into supporting panel].**

2. **Insulation: Faced, glass-fiber, duct liner.**

3. **Drain Pans: Galvanized steel, with connection for drain; insulated[and complying with ASHRAE 62.1-2004].**

4. **Airstream Surfaces: Surfaces in contact with the airstream shall comply with requirements in ASHRAE 62.1-2004.**

C. **Refrigerant Coil: Copper tube, with mechanically bonded aluminum fins, complying with ARI 210/240, and with thermal-expansion valve.**

D. **Water Coil: Copper-tube water coil, with mechanically bonded aluminum fins spaced no closer than 0.1 inch; leak tested to 300 psig underwater; and having a 2-position control valve.**

E. **Electric Coil: Helical, nickel-chrome, electric-resistance heating elements with refractory ceramic support bushings; automatic-reset thermal cutout; built-in magnetic contactors; manual-reset thermal cutout; airflow proving device; and one-time fuses in terminal box for overcurrent protection.**

F. **Evaporator Fan: Forward-curved, double-width wheel of galvanized steel; directly connected to motor.**

G. **Fan Motor: Multispeed.**

H. **Filters: [**1 inch **thick, in fiberboard frames] [Permanent, cleanable] [with ASHRAE 52.2 MERV rating of 6 or higher].**

2.3 *AIR-COOLED, COMPRESSOR-CONDENSER UNIT*

A. **Casing steel, finished with baked enamel, with removable panels for access to controls, weep holes for water drainage, and mounting holes in base. Provide brass service valves, fittings, and gage ports on exterior of casing.**

B. **Compressor: Hermetically sealed [reciprocating] [scroll] type with crankcase heater and mounted on vibration isolation. Compressor motor shall have thermal- and current-sensitive overload devices, start capacitor, relay, and contactor.[Two-speed compressor motor with manual-reset high-pressure switch and automatic-reset low-pressure switch].**

1. **Refrigerant: [R-22] [R-407C] [R-410A] <Insert type>.**

2. **Refrigerant: R-407C or R-410A.**

C. **Refrigerant Coil: Copper tube, with mechanically bonded aluminum fins, complying with ARI 210/240, and with liquid subcooler.**

D. **Heat Pump Components: Reversing valve and low-temperature air cut-off thermostat.**

E. **Fan: Aluminum-propeller type, directly connected to motor.**

F. **Motor: Permanently lubricated, with integral thermal-overload protection.**

G. **Low Ambient Kit: Permits operation down to 45 deg F.**

H. **Mounting Base: Polyethylene.**

I. **Minimum Energy Efficiency: Comply with ASHRAE/IESNA 90.1-2004, "Energy Standard for Buildings except Low-Rise Residential Buildings."**

2.4 *ACCESSORIES*

A. **Thermostat: Low voltage with subbase to control compressor and evaporator fan.**

B. **Refrigerant Line Kits: Soft-annealed copper suction and liquid lines factory cleaned, dried, pressurized, and sealed; factory-insulated suction line with flared fittings at both ends.**

1. **Minimum Insulation Thickness: [**1/2 inch**] [**1 inch**] <Insert thickness> thick.**

PART 3 - EXECUTION

3.1 *INSTALLATION*

A. **Install evaporator-fan components using manufacturer's standard mounting devices securely fastened to building structure.**

B. **Install ground-mounted, compressor-condenser components on 4-inch- thick, reinforced concrete base; 4 inches larger on each side than unit. Concrete, reinforcement, and formwork are specified in Division 03 Section "Cast-in-Place Concrete." Coordinate anchor installation with concrete base.**

C. **Install ground-mounted, compressor-condenser components on polyethylene mounting base.**

D. **Install roof-mounted, compressor-condenser components on equipment supports specified in Division 07 Section "[Roof Acces-**

sories] <Insert Section title>." Anchor units to supports with removable, cadmium-plated fasteners.

E. **Install compressor-condenser components on restrained, spring isolators with a minimum static deflection of 1 inch. Refer to Division 23 Section "[Vibration and Seismic Controls for HVAC Piping and Equipment] <Insert Section title>."**

3.2 ***CONNECTIONS***

A. **Connect precharged refrigerant tubing to component's quick-connect fittings. Install tubing to allow access to unit.**

B. **Connect supply and return water coil with shutoff-duty valve and union or flange on the supply connection and with throttling-duty valve and union or flange on the return connection.**

C. **Connect supply and return condenser connections with shutoff-duty valve and union or flange on the supply connection and with throttling-duty valve and union or flange on the return connection.**

D. **Install piping adjacent to unit to allow service and maintenance.**

3.3 ***FIELD QUALITY CONTROL***

A. **Manufacturer's Field Service: Engage a factory-authorized service representative to inspect[, test, and adjust] field-assembled components and equipment installation, including connections[, and to assist in field testing]. Report results in writing.**

B. **Leak Test: After installation, charge system and test for leaks. Repair leaks and retest until no leaks exist.**

C. **Operational Test: After electrical circuitry has been energized, start units to confirm proper motor rotation and unit operation. Remove malfunctioning units, replace with new components, and retest.**

D. **Test and adjust controls and safeties. Replace damaged and malfunctioning controls and equipment.**

END OF SECTION 238126

SECTION 238239 - UNIT HEATERS

PART 1 - GENERAL

1.1 *SUMMARY*

A. **Section Includes:**

1. **Cabinet unit heaters with centrifugal fans and [hot-water] [electric-resistance heating] coils.**

2. **Propeller unit heaters with [hot-water] [electric-resistance heating] coils.**

3. **Wall and ceiling heaters with propeller fans and electric-resistance heating coils.**

1.2 *SUBMITTALS*

A. **Product Data: Include rated capacities, operating characteristics, furnished specialties, and accessories for each product indicated.**

B. **LEED Submittal:**

1. **Product Data for Prerequisite EQ 1: Documentation indicating that units comply with ASHRAE 62.1-2004, Section 5 - "Systems and Equipment."**

C. **Shop Drawings: Detail equipment assemblies and indicate dimensions, weights, loads, required clearances, method of field assembly, components, and location and size of each field connection.**

1. **Plans, elevations, sections, and details.**

2. **Location and size of each field connection.**

3. **Equipment schedules to include rated capacities, furnished specialties, and accessories.**

D. **Field quality-control test reports.**

E. **Operation and maintenance data.**

1.3 *QUALITY ASSURANCE*

A. **Electrical Components, Devices, and Accessories: Listed and labeled as defined in NFPA 70, Article 100, by a testing agency acceptable to authorities having jurisdiction, and marked for intended use.**

B. **ASHRAE Compliance: Applicable requirements in ASHRAE 62.1-2004, Section 5 - "Systems and Equipment" and Section 7 - "Construction and Startup."**

C. **ASHRAE/IESNA 90.1-2004 Compliance: Applicable requirements in ASHRAE/IESNA 90.1-2004, Section 6 - "Heating, Ventilating, and Air-Conditioning."**

PART 2 - PRODUCTS

2.1 *CABINET UNIT HEATERS*

A. **Available Manufacturers: Subject to compliance with requirements, manufacturers offering products that may be incorporated into the Work include, but are not limited to, the following:**

B. **Manufacturers: Subject to compliance with requirements, provide products by one of the following:**

C. **Basis-of-Design Product: Subject to compliance with requirements, provide [the product indicated on Drawings] <Insert manufacturer's name; product name or designation> or a comparable product by one of the following:**

1. **Airtherm; a Mestek Company.**

2. **Berko Electric Heating; a division of Marley Engineered Products.**

3. **Carrier Corporation.**

4. **Chromalox, Inc.; a division of Emerson Electric Company.**

5. **Dunham-Bush, Inc.**

6. **Engineered Air Ltd.**

7. **Indeeco.**

8. **International Environmental Corporation.**

9. **Markel Products; a division of TPI Corporation.**

10. **Marley Electric Heating; a division of Marley Engineered Products.**

11. **McQuay International.**

12. **Ouellet Canada Inc.**

13. **QMark Electric Heating; a division of Marley Engineered Products.**

14. **Rosemex Products.**

15. **Trane.**

16. **USA Coil & Air.**

17. **<Insert manufacturer's name.>**

D. **Description: A factory-assembled and -tested unit complying with ARI 440.**

1. **Comply with UL 2021.**

E. **Coil Section Insulation: Glass-fiber insulation; surfaces exposed to airstream shall be [aluminum-foil facing] [erosion-resistant coating] to prevent erosion of glass fibers.**

1. **Thickness: [**1/2 inch**] [**1 inch**] [**1-1/2 inches**].**

2. **Thermal Conductivity (k-Value): 0.26 Btu x in./h x sq. ft. at 75 deg F mean temperature.**

3. **Fire-Hazard Classification: Maximum flame-spread index of 25 and smoke-developed index of 50 when tested according to ASTM E 84.**

4. **Adhesive: Comply with ASTM C 916 and with NFPA 90A or NFPA 90B.**

5. **Airstream Surfaces: Surfaces in contact with the airstream shall comply with requirements in ASHRAE 62.1-2004.**

F. **Cabinet: Steel with [factory prime coating, ready for field painting] [baked-enamel finish with manufacturer's standard paint, in color selected by Architect] [baked-enamel finish with manufacturer's custom paint, in color selected by Architect].**

1. **Vertical Unit, Exposed Front Panels: Minimum [**0.0528-inch-**] [**0.0677-inch-**] thick, [galvanized,] sheet steel, removable panels with channel-formed edges secured with tamperproof cam fasteners.**

2. **Horizontal Unit, Exposed Bottom Panels: Minimum [**0.0528-inch-**] [**0.0677-inch-**] thick, [galvanized,] sheet steel, removable panels secured with tamperproof cam fasteners and safety chain.**

3. **Recessing Flanges: Steel, finished to match cabinet.**

4. **Control Access Door: Key operated.**

5. **Base: Minimum 0.0528-inch- thick steel, finished to match cabinet, [**4 inches**] [**6 inches**] <Insert dimension> high with leveling bolts.**

6. **Extended Piping Compartment: [**8-inch-**] <Insert dimension> wide piping end pocket.**

7. **False Back: Minimum 0.0428-inch- thick steel, finished to match cabinet.**

G. **Filters: Minimum arrestance according to ASHRAE 52.1 and a minimum efficiency reporting value (MERV) according to ASHRAE 52.2.**

1. **Washable Foam: 70 percent arrestance and 3 MERV.**

2. **Glass Fiber Treated with Adhesive: 80 percent arrestance and 5 MERV.**

3. **Pleated: 90 percent arrestance and 7 MERV.**

H. **Hot-Water Coil: Copper tube, with mechanically bonded aluminum fins spaced no closer than 0.1 inch and rated for a minimum working pressure of 200 psig and a maximum entering-water temperature of 220 deg F. Include manual air vent and drain.**

I. **Electric-Resistance Heating Coil: Nickel-chromium heating wire, free from expansion noise and hum, mounted in ceramic inserts in a galvanized-steel housing; with fuses in terminal box for overcurrent protection and limit controls for high-temperature protection. Terminate elements in stainless-steel machine-staked terminals secured with stainless-steel hardware.**

J. **Fan and Motor Board: Removable.**

1. **Fan: Forward curved, [high static,]double width, centrifugal; directly connected to motor. Thermoplastic or painted-steel wheels, and aluminum, painted-steel, or galvanized-steel fan scrolls.**

2. **Motor: Permanently lubricated, multispeed; resiliently mounted on motor board. Comply with requirements in Division 23 Section "Common Motor Requirements for HVAC Equipment."**

3. **Wiring Terminations: Connect motor to chassis wiring with plug connection.**

K. **Factory, Hot-Water Piping Package: [**ASTM B 88, Type L**] [**ASTM B 88, Type M**] copper tube with wrought-copper fittings and brazed joints. Label piping to indicate service, inlet and outlet.**

1. **Hose Kits: Minimum 400-psig working pressure, and operating temperatures from 33 to 211 deg F. Tag hose kits to equipment designations.**

a. ***Length: [****24 inches****] [****36 inches****] <Insert dimension>.***

b. ***Minimum Diameter: Equal to cabinet unit heater connection size.***

2. **Two-Piece, Ball Valves: Bronze body with full-port, chrome-plated bronze ball; PTFE or TFE seats; and 600-psig0-kPa) minimum CWP rating and blowout-proof stem.**

3. **Calibrated-Orifice Balancing Valves: Bronze body, ball type, 125-psig working pressure, 250 deg F maximum operating temperature; with calibrated orifice or venture, connection for portable differential pressure meter with integral seals, threaded ends, and equipped with a memory stop to retain set position.**

4. **Y-Pattern, Hot-Water Strainers: Cast-iron body (ASTM A 126, Class B); 125-psig minimum working pressure; with threaded connections, bolted cover, perforated stainless-steel basket, and bottom drain connection. Include minimum NPS 1/2 threaded pipe and full-port ball valve in strainer drain connection.**

5. **Wrought-Copper Unions: ASME B16.22.**

L. **Control devices and operational sequences are specified in Division 23 Sections "Instrumentation and Control for HVAC" and "Sequence of Operations for HVAC Controls."**

M. **Basic Unit Controls:**

1. **Control voltage transformer.**

2. **[Wall-mounting] [Unit-mounted] thermostat with the following features.**

a. ***Heat-off switch.***

b. ***Fan on-auto switch.***

c. ***Manual fan speed switch.***

d. ***Adjustable deadband.***

e. ***[Concealed] [Exposed] set point.***

f. ***[Concealed] [Exposed] indication.***

g. ***Deg F indication.***

3. **[Wall-mounting] [Unit-mounted] temperature sensor.**

4. **Unoccupied period override push button.**

5. **Data entry and access port.**

a. ***Input data includes room temperature, and occupied and unoccupied periods.***

b. ***Output data includes room temperature, supply-air temperature, entering-water temperature, operating mode, and status.***

N. **[DDC]Terminal Controller:**

1. **Scheduled Operation: Occupied and unoccupied periods on seven-day clock with a minimum of four programmable periods per day.**

2. **Unoccupied Period Override: [Two] <Insert number> hours.**

3. **Unit Supply-Air Fan Operations:**

a. ***Occupied Periods: Fan runs continuously.***

b. ***Unoccupied Periods: Fan cycles to maintain setback room temperature.***

4. **Heating Coil Operations:**

a. ***Occupied Periods: [Open control valve] [Modulate control valve] [Energize electric-resistance coil] to provide heating if room temperature falls below thermostat set point.***

b. ***Unoccupied Periods: Start fan and [open control valve] [modulate control valve] [energize electric-resistance coil] if room temperature falls below setback temperature.***

5. **Controller shall have volatile-memory backup.**

O. **Electrical Connection: Factory wire motors and controls for a single field connection.**

P. **Capacities and Characteristics:**

1. **Cabinet:**

a. ***Vertical, Surface Mounted: Upflow.***

1) **Top: [Flat] [Sloped] [Flat or sloped].**

2) **Air Inlet: [Open bottom] [Front, punched louver grille] [Front, extruded-aluminum bar grille].**

3) **Air Outlet: [Front] [Top] [Front or top], [quad louver] [punched louver] [extruded-aluminum bar grille].**

b. ***Vertical, Surface Mounted: Downflow.***

1) **Top: [Flat] [Sloped] [Flat or sloped].**

2) **Air Inlet: [Front] [Top] [Front or top], [punched louver] [extruded-aluminum bar grille].**

3) **Air Outlet: Front, [quad louver] [punched louver] [extruded-aluminum bar grille].**

c. ***Vertical, Semirecessed: Upflow.***

1) **Air Inlet: [Open bottom] [Front, punched louver grille] [Front, extruded-aluminum bar grille].**

2) **Air Outlet: [Front] [Top] [Front or top], [quad louver] [punched louver] [extruded-aluminum bar grille].**

d. ***Vertical, Semirecessed: Downflow.***

1) **Air Inlet: [Front] [Top] [Front or top], [punched louver] [extruded-aluminum bar grille].**

2) **Air Outlet: Front, [quad louver] [punched louver] [extruded-aluminum bar grille].**

e. ***Vertical, Fully Recessed: [Upflow] [Downflow].***

1) **Air Inlet and Outlet: Front, [punched louver] [extruded-aluminum bar grille] inlet and [quad louver] [punched louver] [extruded-aluminum bar grille] outlet.**

2) **Air Inlet: [Front] [Duct connection], [punched louver] [extruded-aluminum bar grille].**

3) **Air Outlet: [Front] [Duct connection], [quad louver] [punched louver] [extruded-aluminum bar grille].**

f. ***Horizontal, Surface Mounted:***

1) **Air Inlet: [Bottom] [Front] [Bottom or front], [punched louver] [extruded-aluminum bar grille].**

2) **Air Outlet: [Front] [Top] [Front or top], [quad louver] [punched louver] [extruded-aluminum bar grille].**

g. ***Horizontal, Semirecessed:***

1) **Air Inlet: [Bottom] [Front] [Bottom or front], [punched louver] [extruded-aluminum bar grille].**

2) **Air Outlet: [Front] [Top] [Front or top], [quad louver] [punched louver] [extruded-aluminum bar grille].**

h. ***Horizontal, Fully Recessed:***

1) **Air Inlet and Outlet: Front, [punched louver] [extruded-aluminum bar grille] inlet and [quad louver] [punched louver] [extruded-aluminum bar grille] outlet.**

2) **Air Inlet: [Front] [Duct connection], [punched louver] [extruded-aluminum bar grille].**

3) **Air Outlet: [Front] [Duct connection], [quad louver] [punched louver] [extruded-aluminum bar grille].**

2. **Fan:**

a. ***Airflow: <Insert** cfm.>*

b. ***External Static Pressure: <Insert** inches wg.>*

c. ***Fan Speed: <Insert rpm.>***

d. ***Motor Horsepower: <Insert value.>***

3. **Heating Capacity:**

a. ***Output: <Insert** Btu/h.>*

b. ***Entering-Air Temperature: <Insert** deg F.>*

c. ***Air-Temperature Rise: <Insert** deg F.>*

4. **Hot-Water Heating Coil:**

a. ***Water Flow: <Insert** gpm.>*

b. ***Water-Side Pressure Loss: <Insert** feet wg.>*

c. ***Entering-Water Temperature: <Insert** deg F.>*

5. **Electric-Resistance Heating Coil:**

a. ***Capacity: <Insert kW.>***

b. ***Number of Steps: <Insert number.>***

6. **Filters:**

a. ***Face Area: <Insert** sq. ft..>*

b. ***Thickness: [**1/2 inch**] [**1 inch**] <Insert thickness>.***

7. **Electrical Characteristics for Single-Point Connection:**

a. ***Volts: <Insert value.>***

b. ***Phase: <Insert value.>***

c. ***Hertz: <Insert value.>***

d. ***Full-Load Amperes: <Insert value.>***

e. ***Minimum Circuit Ampacity: <Insert value.>***

f. ***Maximum Overcurrent Protection: <Insert value.>***

2.2 *PROPELLER UNIT HEATERS*

A. **Available Manufacturers: Subject to compliance with requirements, manufacturers offering products that may be incorporated into the Work include, but are not limited to, the following:**

B. **Manufacturers: Subject to compliance with requirements, provide products by one of the following:**

1. **Airtherm; a Mestek Company.**

2. **Engineered Air Ltd.**

3. **McQuay International.**

4. **Rosemex Products.**

5. **Ruffneck Heaters; a division of Lexa Corporation.**

6. **Trane.**

7. **<Insert manufacturer's name.>**

C. **Description: An assembly including casing, coil, fan, and motor in [vertical] [and] [horizontal] discharge configuration with adjustable discharge louvers.**

D. **Comply with UL 2021.**

E. **Cabinet: Removable panels for maintenance access to controls.**

F. **Cabinet Finish: Manufacturer's [standard] [custom] baked enamel applied to factory-assembled and -tested propeller unit heater before shipping.**

G. **Airstream Surfaces: Surfaces in contact with the airstream shall comply with requirements in ASHRAE 62.1-2004.**

H. **Discharge Louver: Adjustable fin diffuser for horizontal units and conical diffuser for vertical units.**

I. **Hot-Water Coil: Test and rate hot-water propeller unit heater coils according to ASHRAE 33. Copper tube, minimum 0.025-inch wall thickness, with mechanically bonded aluminum fins spaced no closer than 0.1 inch and rated for a minimum working pressure of 200 psig and a maximum entering-water temperature of 325 deg F, with manual air vent. Test for leaks to 350 psig underwater.**

J. **Electric-Resistance Heating Elements: Nickel-chromium heating wire, free from expansion noise and 60-Hz hum, embedded in magnesium oxide refractory and sealed in steel or corrosion-resistant metallic sheath with fins no closer than 0.16 inch. Element ends shall be enclosed in terminal box. Fin surface temperature shall not exceed 550 deg F at any point during normal operation.**

1. **Circuit Protection: One-time fuses in terminal box for overcurrent protection and limit controls for high-temperature protection of heaters.**

2. **Wiring Terminations: Stainless-steel or corrosion-resistant material.**

K. **Fan: Propeller type with aluminum wheel directly mounted on motor shaft in the fan venturi.**

L. **Fan Motors: Comply with requirements in"" Division 23 Section "Common Motor Requirements for HVAC Equipment."**

1. **Motor Type: Permanently lubricated.**

M. **Control Devices: [Unit-mounted] [Wall-mounting] thermostat.**

N. **Capacities and Characteristics:**

1. **Heating Capacity:**

a. ***Heat Output: <Insert** Btu/h.>*

b. ***Length of Throw: <Insert** feet.>*

c. ***Mounting Height: <Insert** feet.>*

2. **Water Coil:**

a. ***Entering-Water Temperature: <Insert** deg F.>*

b. ***Temperature Difference: <Insert** deg F.>*

c. ***Water Flow: <Insert** gpm.>*

d. ***Water-Side Pressure Drop: <Insert** feet.>*

3. **Electric Coil:**

a. ***Heating Capacity: <Insert kW.>***

b. ***Number of Steps: <Insert number.>***

4. **Supply Air:**

a. ***Airflow: <Insert** cfm.>*

b. ***Leaving-Air Temperature: <Insert** deg F.>*

c. ***Entering-Air Temperature: <Insert** deg F.>*

5. **Fan Motor:**

a. ***High Speed: <Insert rpm.>***

b. ***Motor Size: <Insert hp.>***

6. **Electrical Characteristics for Single-Point Connection:**

a. ***Volts/Phase/Hertz: <Insert values.>***

b. ***Full-Load Amperes: <Insert value.>***

c. ***Minimum Circuit Amperes: <Insert value.>***

d. ***Maximum Overcurrent Protection: <Insert value.>***

2.3 *WALL AND CEILING HEATERS*

A. **Available Manufacturers: Subject to compliance with requirements, manufacturers offering products that may be incorporated into the Work include, but are not limited to, the following:**

B. **Manufacturers: Subject to compliance with requirements, provide products by one of the following:**

C. **Basis-of-Design Product: Subject to compliance with requirements, provide [the product indicated on Drawings] <Insert manufacturer's name; product name or designation> or a comparable product by one of the following:**

1. **Berko Electric Heating; a division of Marley Engineered Products.**

2. **Chromalox, Inc.; a division of Emerson Electric Company.**

3. **Indeeco.**

4. **Markel Products; a division of TPI Corporation.**

5. **Marley Electric Heating; a division of Marley Engineered Products.**

6. **Ouellet Canada Inc.**

7. **QMark Electric Heating; a division of Marley Engineered Products.**

8. **Trane.**

9. **<Insert manufacturer's name.>**

D. **Description: An assembly including chassis, electric heating coil, fan, motor, and controls. Comply with UL 2021.**

E. **Cabinet:**

1. **Front Panel: [Stamped-steel louver] [Extruded-aluminum bar grille], with removable panels fastened with tamperproof fasteners.**

2. **Finish: Baked enamel over baked-on primer with manufacturer's [standard] [custom] color selected by Architect, applied to factory-assembled and -tested wall and ceiling heaters before shipping.**

3. **Airstream Surfaces: Surfaces in contact with the airstream shall comply with requirements in ASHRAE 62.1-2004.**

F. **Surface-Mounting Cabinet Enclosure: Steel with finish to match cabinet.**

G. **Electric-Resistance Heating Coil: Nickel-chromium heating wire, free from expansion noise and hum, embedded in magnesium oxide refractory and sealed in corrosion-resistant metallic sheath. Terminate elements in stainless-steel, machine-staked terminals secured with stainless-steel hardware, and limit controls for high temperature protection.[Provide integral circuit breaker for overcurrent protection.]**

H. **Fan: Aluminum propeller directly connected to motor.**

1. **Motor: Permanently lubricated[, multispeed]. Comply with requirements in Division 23 Section "Common Motor Requirements for HVAC Equipment."**

I. **Controls: Unit-mounted thermostat.[Low-voltage relay with transformer kit.]**

J. **Electrical Connection: Factory wire motors and controls for a single field connection[with disconnect switch].**

K. **Capacities and Characteristics:**

1. **Airflow: <Insert** cfm**.>**

2. **Fan Speed: <Insert rpm.>**

3. **Heating Coil: <Insert kW.>**

4. **Electrical Characteristics for Single-Point Connection:**

a. ***Volts: <Insert value.>***

b. ***Phase: <Insert value.>***

c. ***Hertz: <Insert value.>***

d. ***Full-Load Amperes: <Insert value.>***

e. ***Minimum Circuit Ampacity: <Insert value.>***

f. ***Maximum Overcurrent Protection: <Insert value.>***

PART 3 - EXECUTION

3.1 *INSTALLATION*

A. **Install unit heaters to comply with NFPA 90A.**

B. **Suspend cabinet unit heaters from structure with elastomeric hangers[and seismic restraints]. Vibration isolators[and seismic restraints] are specified in Division 23 Section "Vibration and Seismic Controls for HVAC Piping and Equipment."**

C. **Suspend propeller unit heaters from structure with all-thread hanger rods and [elastomeric hangers] [spring hangers] [spring hangers with vertical-limit stop]. Hanger rods and attachments to structure are specified in Division 23 Section "Hangers and Supports for HVAC Piping and Equipment." Vibration hangers are specified in Division 23 Section "Vibration and Seismic Controls for HVAC Piping and Equipment."**

D. **Install wall-mounting thermostats and switch controls in electrical outlet boxes at heights to match lighting controls. Verify location of thermostats and other exposed control sensors with Drawings and room details before installation.**

E. **Unless otherwise indicated, install union and gate or ball valve on supply-water connection and union and calibrated balancing valve on return-water connection of unit heater.**

F. **Install new filters in each fan-coil unit within two weeks of Substantial Completion.**

G. **Piping installation requirements are specified in other Division 23 Sections. Drawings indicate general arrangement of piping, fittings, and specialties.**

H. **Install piping adjacent to machine to allow service and maintenance.**

I. **Connect piping to cabinet unit heater's factory, hot-water piping package. Install the piping package if shipped loose.**

J. **Connect supply and return ducts to cabinet unit heaters with flexible duct connectors specified in Division 23 Section "Air Duct Accessories."**

K. **Comply with safety requirements in UL 1995.**

L. **Ground equipment according to Division 26 Section "Grounding and Bonding for Electrical Systems."**

M. **Connect wiring according to Division 26 Section "Low-Voltage Electrical Power Conductors and Cables."**

3.2 *FIELD QUALITY CONTROL*

A. **Perform the following field tests and inspections and prepare test reports:**

1. **Operational Test: After electrical circuitry has been energized, start units to confirm proper motor rotation and unit operation.**

2. **Operate electric heating elements through each stage to verify proper operation and electrical connections.**

3. **Test and adjust controls and safety devices. Replace damaged and malfunctioning controls and equipment.**

B. **Remove and replace malfunctioning units and retest as specified above.**

END OF SECTION 238239

SECTION 260500 - COMMON WORK RESULTS FOR ELECTRICAL

PART 1 GENERAL

1.01 REFERENCE TO OTHER SECTIONS

1.02 General Conditions: Refer to the GENERAL CONDITIONS and GENERAL REQUIREMENTS for items that affect the work or administration of the work under DIVISION 26 - ELECTRICAL.

1.03 General Provisions: Electrical GENERAL PROVISIONS - specified herein-apply to all Sections of DIVISION 26 - ELECTRICAL.

1.04 DEFINITIONS

A Terms:

1. The following definitions of terms supplement those of the GENERAL CONDITIONS and are applicable to DIVISION 26 - ELECTRICAL:

a. "Provide" shall mean "furnish, install and connect complete".

b. "Wiring" shall mean "wire or cable, installed in raceway with all required boxes, fittings, connectors and accessories; completely installed".

c. "Work" shall be understood to mean "the materials completely installed, including the labor involved".

d. "Plans" shall be understood to mean "the complete set, including all trades".

e. "Specifications" shall be understood to mean "the complete documents, including all sections, addenda items, etc."

f. "Review of Shop Drawings": The Architect's and Engineer's review shall not change the requirements of the contract documents nor shall this review relieve the Contractor of errors in shop drawings. In the event there are deviations between the shop drawings and the contract documents, the contract documents shall apply.

1.05 Drawings:

A The contractor shall specifically note that the electrical drawings are intended to indicate only the extent diagrammatically, general character and location of work included. Work intended but having minor details obviously omitted or not shown shall be furnished and installed complete to perform the required function. The equipment, conduit and device locations are approximate and any changes necessary to clear obstructions shall be made as approved by the Owner and at no additional cost to the Owner.

B For building details, the architectural drawings and specifications shall be followed and the work of the electrical drawings and specifications shall be coordinated and fitted thereto.

C It shall be the responsibility of the contractor to obtain a copy of the Interior Work drawings for location of furniture, counters, etc., for the locating of electrical convenience. Any outlets not located properly will be relocated to the complete satisfaction of the Architect at no additional cost to the Owner. Any questions arising as to locations, etc., will be directed to the Architect.

D The contractor shall review the drawings and specifications and should he find discrepancies, conflicts or omissions in the documents or be in doubt as to the intent thereof, he shall immediately obtain clarification from the Architect/Engineer prior to submitting his proposal for work in this Division.

1.06 Materials:

A All materials used in this work shall be new and shall bear the inspection label of Underwriters Laboratories, Inc.

B The published standards and requirements of the National Electrical Manufacturers Association, the American National Standard Institute, the Institute of Electrical and Electronic Engineers and the American Society of Testing Materials, are made a part of this Specification and shall apply wherever applicable.

C Catalog numbers and trade names in these Specifications and noted on the drawings are intended to describe the materials, devices or apparatus required. Within thirty days after the contract has been awarded or as otherwise directed, forward to the Engineer a complete list of all materials and equipment proposed for installation. List shall include sufficient information to permit ready and complete identification.

1.07 CODES, PERMITS AND ORDINANCES

A Code:

(1) The installation included under this DIVISION shall comply with the latest amended editions of the National Electrical Code, the Electrical Code of the Municipality having jurisdiction and State and Federal laws and regulations.

(2) Referenced Codes and regulations are minimum standards. Where the requirements of these Specifications and the accompanying drawings exceed those of the codes and regulations, the drawings and specifications shall be followed.

(3) The contractor shall obtain permits and licenses required for the installation of the work and shall pay all fees therefore.

(4) At the completion of the work, the contractor shall obtain from the Local Building Authority a Certificate of Approval. This certificate shall be turned over to the Owner at the close of job.

1.08 In preparing his bid, the contractor shall carefully check the plans and specifications for compliance with applicable codes and other legal requirements. He shall inform the engineer, in writing, of any non-conformance before he submits his bid.

1.09 VISIT TO SITE

A All bidders shall visit the site and carefully examine the existing conditions before submitting bids, as no allowance will be made for lack of knowledge of existing conditions, where such conditions may reasonably be determined by observation.

1.10 SUBMITTALS

1.11 Procedure: Refer to the GENERAL CONDITIONS and supplements thereto for submittal procedure of items called for in the Contract Documents.

1.12 Shop Drawings:

A Shop drawings shall be submitted in accordance with the following:

(1) All shop drawings shall be submitted after being checked and certified by the contractor that they comply with drawings and specifications in one single package. It is the intent to have the contractor submit the shop drawings in a face to face meeting, in the engineer's office in Atlanta, so that the various systems may be discussed and questions answered which will expedite the process and hopefully eliminate any confusion. Specific systems to be discussed will be emergency generator, switchboard, panelboards and power monitoring & control system.

(2) The contractor shall be responsible for all dimensions and quantities.

(3) Contractor's submittal shall include a list of the manufacturers of the principal items of material: Wire, raceways, devices, boxes, panelboards, connectors, etc. Full information shall be furnished on products of manufacturers not named in the Specifications.

(4) Submittals shall be detailed in technical content to allow for adequate review. Information shall be furnished for all accessories and options required for a complete installation.

(5) Submittals which are prepared by manufacturers or vendors shall be completed by the contractor to include any additional materials or work required to complete the installation. Lighting fixtures shall have complete information on the type, wattage, color and manufacturer for each lamp required. The term "by others" or "by Contractor" shall not be included in any submittal.

(6) Submittals which do not comply with all of the requirements of this Section will be returned without review.

1.13 Shop Drawings List:

A Submit detailed shop drawings and/or catalog data for the following equipment for review:

(1) Circuit breakers

(2) Panelboards

B Lighting Fixtures

C Lighting Control System

1.14 The following items of equipment and materials shall be submitted for approval by reference to the manufacturer and specific catalog and model number:

A Safety switches
B Receptacles, switches, plates and devices
C Large junction boxes
D Lamps
E Fuses

1.15 WORKMANSHIP AND APPROVAL

A Work under this Section shall be performed by skilled and qualified electricians. Work shall be subject to constant inspection and final approval by the Architect. Any inspections or approvals shall not relieve the contractor of responsibility for compliance with any and all requirements of the Contract documents.

1.16 GUARANTEE, CORRECTION OF WORK AFTER ACCEPTANCE

1.17 Specific attention is called to DIVISION 1 - GENERAL CONDITIONS on these subjects.

1.18 RECORD DRAWING PRINTS

A Shall be submitted to the Architect at completion of the work.

B Shall be one blueline print of the Contract Drawings on which have been marked in red all additions of outlets and equipment to the original design and all relocations of outlets, raceways and equipment.

1.19 MAINTENANCE DATA

A Furnish and deliver at final inspection complete copies of all data prepared by manufacturers detailing operation and maintenance instructions on all equipment requiring maintenance.

1.20 PAINTING

A Equipment and materials not provided with factory-applied finish shall be painted as described in another Division of these Specifications. Electrical work which will be job-painted shall be clean of dirt, grease, rust, cement and plaster.

B Equipment with a factory-applied finish shall have scratches, discoloration, chips, etc., repaired and refinished to the satisfaction of the Architect.

PART 2 PRODUCTS

2.01 MATERIAL

A All material, apparatus and equipment shall be new and shall bear the label of the Underwriters Laboratories, Inc., where such labels are available.

2.02 MOTOR HORSEPOWER

A The horsepower of motors indicated on the plans is the estimated horsepower requirements of equipment furnished under other sections of the specifications. All wiring, feeder protection devices and disconnect devices shall be of the size and ampacity for the horsepower of the respective motor actually installed. However, in no case shall these items be of smaller capacity than those indicated on the drawings. The contractor shall coordinate with the other trades and provide suitable equipment so that the above requirements shall be met without any additions to the contract price.

2.03 PROTECTION OF MATERIALS

A Keep all conduit and other openings protected to prevent entry of foreign matter. Cover fixtures, equipment and apparatus for protection against dirt, water, chemical or mechanical damage before and during construction. The original finish, including shop coat of paint on fixtures, apparatus or equipment that has been damaged shall be restored prior to final acceptance.

2.04 UNIT RESPONSIBILITY

A All distribution, lighting and appliance panelboards shall be the unit responsibility of one manufacturer. All component parts of the above listed items shall be of the same manufacturer, except where a written request for a deviation from this requirement has been approved prior to bid date.

2.05 DEVIATIONS

A No deviations from the plans and specifications shall be made without the full knowledge and consent of the Architect.

B Should the Contractor find, at any time during the progress of the work, that, in his judgment, existing conditions make desirable a modification in requirements covering any particular item or items, he shall report such items promptly to the Architect for his decision and instructions.

2.06 REJECTION OF MATERIALS

A The Architect shall have the authority to reject any material, equipment or workmanship not complying with these Specifications; and the Contractor shall replace defective work or materials immediately upon notification of rejection. Any material so rejected shall be removed from the job within 24 hours of such rejection; otherwise, the Architect may have same removed at the Contractor's expense.

End

SECTION 260501 - SCOPE OF THE WORK - ELECTRICAL

SECTION 260501 - SCOPE OF THE WORK - ELECTRICAL

PART 1 GENERAL

1.01 WORK INCLUDED

A Work under this Section shall include the furnishing of all articles, materials, labor, supervision and services required for the installation of electrical systems in this project.

B All systems and equipment shall be installed complete and fully operative.

C Electrical connections and power supplies shall be provided to all Division 22 & 23 equipment and other equipment or equipment furnished by Owner. Subcontractor shall be responsible for reviewing the Architectural, Mechanical and Plumbing Drawings and Specifications to identify all equipment.

1.02 TEMPORARY FACILITIES

A Provide and pay costs for the installation of temporary electric service and lighting a stated in DIVISION 1 - GENERAL CONDITIONS.

1.03 CONNECTIONS TO MECHANICAL EQUIPMENT

A All air conditioning, plumbing and heating equipment requiring electrical power shall be fully connected electrically and ready for operation. All power wiring for air conditioning, plumbing and heating equipment shall be furnished and installed under DIVISION 26 of the work.

B Air conditioning control and interlock wiring will be furnished and installed as part of DIVISION 23 work, unless hereinafter specified or indicated on the Electrical Drawings.

C Motor control in designated air conditioning units will be factory installed and wired. Connect indicated power circuits to terminals provided in units through disconnect switches mounted at units.

D All other motor control will be individual devices furnished under DIVISION 23 unless specifically shown on the electrical drawings; installed and wired under DIVISION 26.

E Wire to exhaust fan unit terminals through firestats and motorized shutters or dampers furnished and mounted as DIVISION 23 work, unless specifically shown on Div 26 drawings.

F Individual protective devices (circuit breakers and fusible switches) not factory installed in mechanical equipment shall be furnished and installed as DIVISION 26 work.

G Disconnect switches shall be furnished and installed as DIVISION 26 work, as indicated and as required by codes.

H Capacities indicated for mechanical equipment and branch circuits and feeders for same indicated on the drawings are based on information furnished on equipment specified. All equipment characteristics shall be verified as indicated and capacities increased accordingly where required.

1.04 IDENTIFICATION

A Install, as hereinafter specified, an engraved laminated white core nameplate engraved with usage or identification of the device or equipment.

B Affix nameplates with rustproof screws or epoxy cement.

C Nameplates on normal panels shall be “black” and “red” for emergency.

D Embossed tape strips shall not be used.

E Panelboard directory identification cards shall be typed to indicate loads served. Spare breakers shall be noted in pencil.

F Junction boxes for feeders or multi-wire branch circuit shall all be identified with the circuits. Label normal circuits with “black” marker and “red” for emergency.

1.05 COORDINATION

A Before any piping, raceway, ductwork, outlets, equipment or lighting fixtures are located in any area, coordinate the space requirements of all trades. Such shall be arranged so that space conditions will allow all trades to install their work and will also permit access for future maintenance and repair.

B Piping, ductwork, raceways and equipment installed at variance with the above requirements shall be relocated and/or revised to conform to those requirements at no added cost to the Owner.

C Space conditions and conflict problems which cannot be resolved by the Contractor shall be referred to the Architect.

D The electrical installation shall proceed as fast as the remainder of the construction will permit. Schedule the electrical work so that completion of the Project will not be delayed.

End

SECTION 260502 - BASIC MATERIALS AND METHODS

PART 1 GENERAL

1.01 DESCRIPTION

A Description of Systems: This Section encompasses products, assemblies and methods which are required by more than one of the project systems encompassed by the Sections of DIVISION 26.

B Other items of basic materials and methods are specified in the following Sections:

(1)	"RACEWAYS"	SECTION 26 0533
(2)	"CONDUCTORS"	SECTION 26 0519
(3)	"OUTLET BOXES"	SECTION 26 0534
(4)	"WIRING DEVICES"	SECTION 26 2726
(5)	"DISCONNECTS"	SECTION 26 2817
(6)	"SUPPORTING DEVICES"	SECTION 26 0529

1.02 QUALITY ASSURANCE

A Design Criteria:

1. All apparatus for the various systems shall be of proper rating for the voltage of the systems.

2. All equipment components shall be of such physical size to be easily introduced into the space available in the building.

3. All equipment shall readily fit in the spaces indicated on the drawings. If any equipment proposed is of larger size than the design selection or involves larger controls or any contingent difference which requires additional space, its use is not permitted.

PART 2 - PRODUCTS

1.03 WOOD BACKBOARDS

A Wood: Backboards shall be made of 3/4" Grade B-C plywood.

B Paint: Backboards shall be painted with two (2) coats of fire inhibiting gray finish.

1.04 NAMEPLATES

A Provide laminated black, whitecore bakelite nameplates for all devices. Letters on nameplates shall be block style, of height as specified herein.

B The following letter size shall be provided for each piece of the following equipment:

(1) Service Switchboard
(2) Designation: 1/2"

(3)	Voltage:	1/4"
(4)	Switches in Switchboard:	1/4"
(5)	Branch Circuit Panelboards -	
(6)	Designation:	1/2"
(7)	Voltage:	1/4"
(8)	Safety Switches:	1/4"
(9)	Enclosed Circuit Breakers:	1/4"
(10)	Starters:	1/4"

1.05 SPARE FUSES

A 25% of each type and rating shall be provided for spares with a minimum of two and a maximum of six for each type and rating.

B Fuses shall be turned over to Owner at completion of job.

PART 3 - EXECUTION

1.06 CUTTING AND REPAIRING

A Refer to the DIVISION 1 - GENERAL CONDITIONS.

B Provide all sleeves required for proper installation of work included under this heading.

1.07 EXCAVATION AND BACKFILLING

A Do all trenching, excavation and backfilling required for the electrical work indicated on the Drawings, including repairing, shoring, bracing and pumping.

B Backfilling shall be done in layers of 12" fill, wetted down and tamped for each consecutive layer to grade. Refer to another Division for compaction requirements.

C Repairing shall be comparable to work cut and shall have final approval of authorities having jurisdiction.

D Contractor shall locate and avoid any existing facilities during excavation and shall give written notification of any unforeseen conditions.

1.08 NAMEPLATES

A Starters and Controllers: Provide nameplates for each individually enclosed circuit breaker, safety switch and for each starter or controller. The usage of each switch and starter shall be etched on the plate and the plate mounted on the switch and starter cover after all painting has been completed.

B Service Switchboard and Branch Circuit Panelboards: Provide nameplates for the service switchboard and branch circuit panelboards with the designation shown on the drawings etched on the plate along with the supply voltage rating to the equipment mains. Provide nameplates on the service switchboard indicating the usage for each fusible switch and/or circuit breaker.

C Sheet metal screws or epoxy shall be used as the means of affixing nameplates to their respective devices.

1.09 WOOD BACKBOARDS

A Telephone Equipment: Provided by Division 17000.

B Power Backboards: Provide as required for power equipment. Mount starters, breakers, gutters or other apparatus indicated on the backboards.

C Wiring on wood backboards shall be done in screw-cover wireways and rigid galvanized steel conduit.

D Fasten to wall with 1/4 inch or larger toggle bolts on concrete block walls or with bolts in expansion shields or preset inserts, in poured concrete walls with 1/2" spacers between wall and board.

1.10 APPARATUS CONNECTIONS

A Where connection is to be made to an item of equipment, such as a motor, which is not located near a wall or column, a vertical conduit attached to the floor and ceiling shall be installed and the wiring brought out of this conduit by means of condulets.

B Connections to vibrating equipment, such as motors, duct heaters, etc., shall be made with a short length of liquid tight flexible conduit eighteen (18) inches minimum and thirty six (36) inches maximum, in length.

1.11 FINAL TESTS

A Extent of Testing: Upon completion of the work, test the individual systems, including all feeders, service, branches, outlets, lighting motors, apparatus and appliances.

B Equipment: Provide all instruments, labor and materials required for any essential intermediate and final tests designated.

C Results: Tests shall indicate full compliance with specifications, drawings and applicable codes. All tests will be observed by the Owner's representative.

End

SECTION 260519 - CONDUCTORS

PART 1 GENERAL

1.01 DESCRIPTION

A Description of System: Provide a complete system of wiring with all feeders and branches as shown on the drawings. The wiring system shall be complete to each and every outlet and apparatus shown on the drawings which requires electrical connections.

1.02 QUALITY ASSURANCE

A Acceptable Manufacturers: Wire shall be Crescent, General Cable, Rome, Triangle, Okonite, Pirelli or Southwire.

B Standards: Specified conductor gauge sizes refer to American Wire Gauge.

PART 2 PRODUCTS

2.01 CONDUCTORS

A Conductor Material: Conductors shall be copper, 98.5% conductivity. Unless otherwise noted.

B All new wire and cable routed in conduits shall have copper conductors and shall have 600 volts NEC Type THWN or THHN insulation for branch circuits and Type XHHW for feeders. Unless otherwise noted.

C Any aluminum conductors indicated on drawings shall be compact type.

D All branch circuits for lighting, receptacles and PTAC units will utilize THHN" type cable with grounding conductor.

E Wire #8 AWG and larger shall have stranded conductors. Wire #10 AWG and smaller shall be solid conductor type.

F No wire shall be smaller than #12 AWG, unless otherwise specified.

G Branch circuit wiring which supplies more than one fluorescent fixture through the wiring of other fixtures shall be 90°C, insulation Type THHN or TFFN.

H Cable pulling compound shall be the type manufactured for use with plastic insulated wires. Yellow #77 or equal.

2.02 ACCESSORIES

A Wire Joints: T & B "Sta-Kon", "Scotchlock Type R", Ideal #452 or 454, Buchanan "B-Cap".

B Cable Connectors: Solder less type, O.Z. "circular clamp type" or T & B "lock-tite" appropriate for the particular application involved. Two-way

connectors and "T-Taps" shall have molded thermoplastic covers.

PART 3 EXECUTION

3.01 PREPARATION

A Lubricant: No grease, oil or lubricant other than powdered soapstone, or approved pulling compound, shall be used to facilitate the pulling of wires.

B Raceway: Raceways shall be free of concrete, moisture or other foreign matter. Raceways shall be swabbed as necessary before pulling wire.

3.02 INSTALLATION

A Complete electrical systems shall be provided as shown on the drawings and/or as specified herein.

B Wires shall be pulled without excessive strain to prevent damage to conductor or insulation.

C Each raceway or cable indicated by symbol on drawings shall contain #12 AWG wires as indicated.

D Branch circuit designations, as shown on the plans, are arbitrary and each circuit of multi-circuit home run shall be connected to a different phase of the distribution panel to balance the load within 10%.

E Cable pulling compound shall be used in raceways.

F No wire shall be smaller than #12, unless otherwise specified.

G At each fixture or device outlet a loop or end of wire not less than eight inches long shall be left for connection to fixture or device.

H Wire in capped outlets shall have ends taped.

I Splices, taps and connections shall be made up as follows:

1. Wire sizes #8 AWG and smaller with mechanical connectors.

2. Wire and cable of sizes #6 AWG and larger, with mechanical or indent connectors. Indent connectors are preferred on 350 MCM and 500 MCM sizes.

J Joints shall be covered with 7 mil thick electrical tape on branch circuit wiring connections and 10 mil thick electrical tape on mechanical and indent connectors on larger cables.

K All wire shall be color coded to indicate the various phases and neutral. Where color coding is impractical, approved 3/4" wide tape bands, corresponding to Color Code, N.E.C. SECTION 210.5, shall be provided.

End

SECTION 260526 - GROUNDING AND BONDING

SECTION 260526 - GROUNDING AND BONDING

PART 1 GENERAL

1.01 DESCRIPTION

A This Section specifies the requirements for supplemental ground fields, system grounds and equipment grounds.

1.02 REGULATIONS

A Minimum requirements for grounding shall be the National and Local Electrical Codes.

PART 2 PRODUCTS

2.01 GROUND CONDUCTORS

A Provide all conduits with a separate green insulated grounding conductor for feeders and branch circuits. Unless otherwise specified or indicated, the ground conductor shall be a #12 AWG "THWN" as a minimum.

B Unless otherwise indicated, all other ground leads shall be 600 volt N.E.C. Type "THWN".

2.02 CONNECTIONS

A Connections in the supplemental ground field shall be made using a thermoweld process (Cadweld, or equal).

B Other grounding connections shall be made with bonding clamps approved for the purpose.

PART 3 EXECUTION

3.01 GROUNDING SYSTEM

A A building grounding system, consisting of driven ground rods and interconnecting copper wiring, with bonding connections to cold water entrance pipe and ground bus in service switchboard, shall be provided as indicated on the drawings.

B A supplemental ground field, as required by Art. 250.80, N.E.C., shall be bonded to the ground bus in the main Service Switchboard.

3.02 EQUIPMENT AND SYSTEM GROUNDS

A All electrical equipment enclosures and conductor enclosures shall be grounded. All locknut connections to cabinets, pull boxes, junction boxes, etc., shall be wrenchtight, with locknut projection driven into the opposing metal surfaces.

B A bonding jumper shall be installed inside of each flexible conduit on motor and mechanical equipment circuits. Jumper shall bond from outlet box at origin of flexible conduit to outlet box or equipment at its termination. It shall be sized

according to Table 250.102, N.E.C.

C Provide a grounding conductor (#6 AWG) for each telephone and television backboard to the nearest accessible effectively grounded cold water pipe or service ground for Telephone Company's ground.

End

SECTION 260529 - SUPPORTING DEVICES

SECTION 260529 - SUPPORTING DEVICES

PART 1 GENERAL

1.01 DESCRIPTION

A This Section specifies the requirements for supporting or mounting of work installed under this Division.

1.02 QUALITY ASSURANCE

A Design Criteria: Materials employed for support shall be of a type manufactured and approved for the intended application.

B Published Data: Upon request, furnish data published by the manufacturer indicating load-bearing capacity and approved usage of the support.

PART 2 PRODUCTS

2.01 CONCRETE INSERTS

A Eaton B-Line (Grinnell) "CB-Universal" or Hohmann & Barnard, Inc “HA” (or larger).

2.02 CONCRETE ANCHORS

A Phillips “Red Head” or USM Corporation "Molly Parabolt".

2.03 STEEL FRAMING

A Kindorf or Unistrut steel channel or angle, with accessory fittings.

2.04 Cable Clamps: Russell Stoll or O.Z. Gedney.

PART 3 EXECUTION

3.01 GENERAL

A Locate and install all inserts in the new construction before slabs are poured.

B Spacing of support and sizes of supports shall be governed by the load to be supported.

C Working load of supports shall be based on a safety factor not less than 4:1.

D Spacing intervals shall not exceed those required by the National Electrical Code.

E Exterior building walls below grade shall not be pierced by hanger bolts.

3.02 CONDUIT SUPPORT

A Individual conduits shall be hung using Kindorf 6H conduit straps with threaded rods or stud anchors.

B Multiple conduits shall be installed on gang hangers using channel iron with Kindorf C-105 straps.

3.03 CABLE SUPPORTS

A Install cable supports in vertical conduit risers at intervals prescribed by the National Electrical Code.

B Lace up cables to supports in switchboards using "Ty-wraps".

3.04 WOOD BACKBOARDS

A Mount wood backboards on walls using 1/4" or larger toggle bolts or anchors and 1/2" spacers between wall and board.

3.05 OTHER EQUIPMENT

A Mount other equipment as required using inserts or anchors of adequate size and spacing.

B Comply with manufacturer's recommended mounting method.

3.06 GROUTING

A Fill any voids left in inserts with grout.

End

SECTION 260533 - RACEWAYS

SECTION 260533 - RACEWAYS

PART 1 - GENERAL

1.01 DESCRIPTIONS

A Description of System: Provide raceways and conduit indicated on the drawings, complete with all required accessories, hangers, supports, connections and fittings necessary to make the system complete. All raceways must be concealed, except in electrical/mechanical rooms.

B This contractor is responsible for all conduit, including Division 27, 28 & 29, coordinate with other subcontractors.

C Definitions:

1. Concealed Conduit: Conduit installed above suspended ceilings or within columns, slabs or walls.

2. Exposed Conduit: Conduit exposed to view.

1.02 QUALITY ASSURANCE

A Acceptable Manufacturers:

(1) Metallic Conduit: Triangle, Allied, Wheatland, Pittsburgh Standard, Jones and Laughlin, Youngstown or Wheeling-Pittsburgh.

(2) Non-Metallic Conduit: Carlon.

(3) Surface Metal Raceways: Walkerduct, Wiremold or Airey-Thompson.

(4) Flexible Metal Conduit:

a. Greenfield (flexible metal conduit with no cover)

b. Anaconda (liquid-tight conduit with PVC cover)

1.03 JOB CONDITIONS

A Protection: Secure conduits in place and protect where necessary to prevent damage to the work during construction. Plug ends of all conduit runs with cork or oakum to avoid filling with mortar, etc.

B Sequencing, Scheduling: The layout of conduit is diagrammatic only and where changes are necessary due to structural conditions, other apparatus or other causes, such changes shall be made as approved by the Architect and without any additional cost to the Owner.

PART 2 PRODUCTS

2.01 METALLIC CONDUIT

A Material: Conduit shall be of best quality steel, of standard pipe size, smooth inside and out and shall be hot dipped galvanized or sherardized.

B Rigid Steel Conduit:

(1) Fittings and couplings shall be hot dipped galvanized or sherardized. Aluminum alloy fittings shall not be used.

(2) Make threaded joints in exposed conduit with anti-seize compound applied to the male threads only.

(3) Use Bakelite, insulated bushings with separate locknuts on all rigid conduits entering panel cabinets, outlet boxes, etc.

(4) All connections in areas exposed to weather shall be made using watertight hubs.

C Thinwall Steel Conduit (Electrical Metallic Tubing):

(1) All E.M.T. entering panel cabinets, outlet boxes, etc., shall be provided with an all-steel insulated throat connector.

(2) Connectors, couplings and fittings for electrical metallic tubing shall be UL approved as raintight and concrete tight, of the interlocking compression-ring type. Each connector shall have a factory-installed insulated throat bushing.

D Flexible Conduit: Flexible conduit shall be single strip, shall have bonding jumper installed inside all flexible conduits and shall be bonded beyond each end of the flexible conduit to provide ground continuity.

E Liquidtight Flexible Conduit: Anaconda "Sealtite," Type "EF," PVC jacketed flexible metal conduit.

F Expansion Fittings: Provide expansion fittings with bonding jumpers in conduit at building expansion joints.

G NON-METALLIC CONDUIT

(1) Material: Carlon Type 40 heavy wall rigid "PV-Duit" polyvinyl chloride conduit.

(2) Accessories: Fittings, couplings, bends, etc., shall be Carlon manufacturer.

2.02 SMOKE AND FIRE-STOP METHODS

A Openings in floor slabs or fire rated walls and ceilings through which cables, conduits or piping must pass shall be sealed by U.L. recognized fire barrier assembly with a rating equal to or greater than the rating of the wall, floor or ceiling which is penetrated. Such penetrations are not specifically indicated on the drawings and shall be located and verified by the Contractor.

B The method utilized for construction and installation of fire stops and barriers shall be in strict accordance with details and directives described in the U.L. Building Materials Directory, 1984.

C The materials utilized for construction of fire stopping and barriers shall be commercially manufactured caulks, wrapping, foams or strips, installed specifically per the manufacturers U.L. approved instructions. Materials shall be by 3M, Chase Technologies Corporation or Dow Corning.

D Only E.M.T. or rigid steel conduit or I.M.C. shall be used for any penetration of fire rated construction, except as noted on drawings.

E Interiors of large empty raceways for computer cables shall be filled with a fire sealant foam which remains soft, pliable and self-sealing throughout its life.

PART 3 EXECUTION

3.01 LOCATION

A Layout: In general, the conduit installation shall follow the layout indicated on the drawings.

B Conduits will be utilized only as indicated on plans.

a. Conduit sleeves shall be used thru fire walls.

b. Conduit will be used for vertical runs in blocks in cells of stair wells and elevator shaft.

c. Conduit will be utilized for circuits that have large size conductors (individual) in lieu of "NM" cable.

C Generally, all conduits shall be concealed, unless otherwise directed or indicated on the drawings.

D Offsets in conduits are not indicated and must be furnished as required.

E Schedule:

(1) Metal conduit shall be used as a raceway system only as indicated for all wiring, except as specified otherwise herein or otherwise shown on drawings.

(2) Non-metallic conduit shall be used where non-metallic conduit or plastic conduit (PVC) is specified herein or shown on the drawings. At the Contractor's option, raceways installed underground or below slabs on grade, may be Schedule 40 heavy wall rigid PVC conduit. Such raceways which carry electrical circuits shall be provided with separate ground wires as required by NEC Article 250 and 378. All elbows that turn up from below grade to above grade or above slab shall be rigid galvanized steel.

(3) Where National and local codes prohibit use of electrical metallic tubing or rigid non-metallic conduit (Schedule 40 PVC), rigid hot-dipped galvanized steel conduit shall be used.

F Sizes:

(1) Unless otherwise indicated, all conduit shall be 1/2" trade diameter, minimum. Larger sizes shall be used where indicated or where required due to conductor quantity.

(2) Conduit concealed in slabs shall not exceed 1-1/4" nor be less than 3/4".

(3) No bends shall be made with a radius less than six (6) times the diameter of the conduit nor more than 90°.

G SUPPORTING DEVICE INSTALLATION

(1) Spacing and Attachment: Support exposed or concealed conduit from walls or ceilings, at intervals required by Code but not to exceed intervals of 5'-0" for electrical metallic tubing and 10'-0" for rigid steel conduit, with approved galvanized iron clamps or hangers. Devices attached to masonry or slabs shall be secured with inserts or bolts or lead expansion sleeves. Where two or more conduits run adjacent, they shall be installed on gang hangers.

(2) Cable Clamps: Provide cable clamps in vertical conduit riser at intervals prescribed by the National Electric Code.

(3) Limitations: Wire, pipe straps, nails, ceiling construction or other means shall not be used for supporting conduit runs, exposed or in suspended ceilings, nor shall they be strapped to other piping.

3.02 CONDUIT AND RACEWAY INSTALLATION

A Larger Sizes: The conduit sizes indicated on the drawings may be increased, if required, to facilitate the pulling of cables.

B Accessories: Provide junction boxes or pull boxes where shown on the drawings and where necessary to avoid excessive runs or too many bends between outlets. Where raceways are routed concealed in above grade concrete or masonry construction, pull boxes shall be provided if the total number of bends exceeds 180° or the length of run exceeds 100 feet. Additional pull boxes shall be provided as necessary to facilitate installation of cables or conductors. All such pull boxes shall be accessible after completion.

C Grouting: Grout around all conduits passing through walls, except where fire stops are used.

D Fire Stops: Provide fire stops wherever conduits pass through fire rated walls (elevator shaft and stairwells) or floor slabs. Install in strict accordance with manufacturer's instructions.

E Empty Raceways: Provide empty raceways where indicated on the drawings. An insulated plastic pull wire shall be pulled into each empty raceway and left for future use.

F Raceways run underground shall be a minimum of 36 inches below grade or paving.

G Where raceways are run below grade and in parallel configuration (e.g. service

entrance or feeders exceeding 400 amps), such raceways shall be racked on conduit spacers manufactured for this purpose. Spacers shall be located at maximum spacing of 5'-0" along conduit run. Spacers shall be constructed so that conduits maintain a separation of 7.5 inches center to center.

End

SECTION 260534 – OUTLET BOXES

PART 1 GENERAL

1.01 DESCRIPTION

A. Description of System: Standard galvanized steel boxes shall be provided at all outlets for lights, switches, receptacles, etc., except as specified herein.

1.02 QUALITY ASSURANCE

A. Acceptable Manufacturers: Outlet boxes shall be Midland-Ross, Appleton, Raco, National Electric Products Company or Steel City Electric Company.

1.03 JOB CONDITIONS

A. Protection: Anchor boxes securely to formwork. Provide necessary protection to prevent entry of concrete.

B. Sequencing, Scheduling: Locations of outlets shown on the drawings are relative and approximate. Exact locations shall be determined on the job and the outlets accurately set according to the Architectural drawings, dimensions, building conditions and Architect's direction. The right is reserved to change the exact location of any switch, ceiling outlet or other outlet in any room before it is permanently installed.

PART 2 PRODUCTS

2.01 OUTLET BOXES

A. Standard Outlet Boxes: Boxes and covers shall be galvanized steel, not less than 1/16" thick and, in every instance, of such form and dimensions as to be adapted to its specific use and location, kind of fixtures to be used and number, size and arrangement of conduits or cables connecting thereto.

B. Non-metallic boxes are acceptable in multi-family buildings.

C. Ceiling outlet boxes shall be 1-1/2 or 2-1/8 inches deep, 4 inches octagonal or 4 inches square when required due to number of wires. Plaster rings or device covers need not be provided on ceiling boxes.

D. Wall outlet boxes for toggle switches and convenience outlets shall be 1-1/2 or 2-1/8 inches deep, 4 inches square. Provide with single device plaster rings (or two-device plaster rings where needed). Plaster rings shall be raised type to compensate for thickness of plaster or gypsum board wall finish. All outlet boxes shall be set to within 1/8" of finished wall surface.

E. Junction boxes shall be as specified for ceiling and wall outlet boxes. Provide flat steel covers on ceiling outlets painted to match surrounding ceilings. Provide blank device-type cover plates on wall outlets, of same materials and exact color as specified for device plates in same room or area.

F. Outlet boxes for exposed conduit exposed to weather or dampness shall be cast ferrous alloy, galvanized.

G. Covers: Where outlet boxes are to be capped, blank cover plates shall be used.

H. Outlet boxes for use in masonry walls shall be not less than 1/16" steel with square corners, minimum 4" square x 2-1/2" deep, designed to be used in masonry walls.

PART 3 EXECUTION

3.01 INSPECTION

A. The location of all wall outlets, including light fixtures, receptacles switches, etc., shall be verified to see that the outlet will clear any wall fixture, shelving, work tables, sinks, baseboard and fin type convectors, bulletin boards, etc., before they are installed.

B. Coordination: Exact locations of outlet boxes shall be coordinated with other trades, so that outlet will not be covered by ductwork, piping, etc.

C. The approximate locations of outlets are indicated on the drawings. The exact locations shall be determined during construction. The right is reserved to change, without additional cost, the exact location of any outlet, a maximum of 10 feet before it is permanently installed.

3.02 PREPARATION

A. Architectural Placement: Outlets occurring in architectural features shall be accurately centered in same.

1. Mounting Height:

a. Unless otherwise required, indicated or directed, outlet boxes shall be placed with center lines at the following distances above the finished floor. Dimensions indicated below do not reflect Fair Housing Requirements. See drawings for Fair Housing mounting heights:

i. Wall Switches 48"
Wall Convenience 18"
Outlets 18"
Wall Telephone 18"
Outlets 18"
Thermostats 60"
Special Outlets As noted on the drawings.

ii. Exit Signs
(Wall) 12" above door header

iii. Install all outlet boxes in finished areas flush with wall or ceiling finish.

iv. All outlet boxes for switches at same level shall be installed with each center line on one horizontal line.

v. Wall mounted controls, including temperature controls, in a room shall be grouped at the same location and at same mounting heights.

3.03 INSTALLATION

A. At all concealed outlets for lighting fixtures, wall switches, wall receptacles, etc., installed in gypsum board construction, standard galvanized steel outlet boxes shall be provided. Provide

plaster rings where required.

B. Outlet boxes shall be firmly anchored in place and shall be provided with approved fixture studs where required.

C. Outlet boxes installed in masonry construction shall be set plumb and flush with finished wall on all sides. Openings for boxes shall be cut to the same outside dimensions as the box or shall be finished with grout flush to the edges of the box.

D. The edge of all outlet boxes shall be flush with the surface in which they are recessed. The devices that fit into the outlet boxes shall be screwed tight before the cover plate is installed and the cover plate shall not be used as a means of tightening the devices in place. The openings for each box shall be cut or finished so that the supporting ears for each device will be completely supported on top and bottom by the wall surface.

END OF SECTION

SECTION 260553 - IDENTIFICATION FOR ELECTRICAL SYSTEMS

PART 1 - GENERAL

1.1 SUMMARY

A. Section Includes:

1. Identification for raceways.
2. Identification of power and control cables.
3. Identification for conductors.
4. Underground-line warning tape.
5. Warning labels and signs.
6. Instruction signs.
7. Equipment identification labels.
8. Miscellaneous identification products.

1.2 ACTION SUBMITTALS

A. Product Data: For each electrical identification product indicated.

1.3 QUALITY ASSURANCE

A. Comply with ANSI A13.1.

B. Comply with NFPA 70.

C. Comply with 29 CFR 1910.144 and 29 CFR 1910.145.

D. Comply with ANSI Z535.4 for safety signs and labels.

E. Adhesive-attached labeling materials, including label stocks, laminating adhesives, and inks used by label printers, shall comply with UL 969.

PART 2 - PRODUCTS

2.1 POWER RACEWAY IDENTIFICATION MATERIALS

A. Comply with ANSI A13.1 for minimum size of letters for legend and for minimum length of color field for each raceway size.

B. Colors for Raceways Carrying Circuits at 600 V or Less:

1. Black letters on an orange field
2. Legend: Indicate voltage.

C. Self-Adhesive Vinyl Labels for Raceways Carrying Circuits at 600 V or Less: Preprinted, flexible label laminated with a clear, weather- and chemical-resistant coating and matching wraparound adhesive tape for securing ends of legend label.

D. Snap-Around Labels for Raceways Carrying Circuits at 600 V or Less: Slit, pretensioned, flexible, preprinted, color-coded acrylic sleeve, with diameter sized to suit diameter of raceway or cable it identifies and to stay in place by gripping action.

E. Snap-Around, Color-Coding Bands for Raceways Carrying Circuits at 600 V or Less: Slit, pretensioned, flexible, solid-colored acrylic sleeve, 2 inches (50 mm) long, with diameter sized to suit diameter of raceway or cable it identifies and to stay in place by gripping action.

F. Write-On Tags: Polyester tag, 0.015 inch (0.38 mm thick, with corrosion-resistant grommet and cable tie for attachment to conductor or cable.

1. Marker for Tags: Permanent, waterproof, black ink marker recommended by tag manufacturer.
2. Marker for Tags: Machine-printed, permanent, waterproof, black ink marker recommended by printer manufacturer.

2.2 ARMORED AND METAL-CLAD CABLE IDENTIFICATION MATERIALS

A. Comply with ANSI A13.1 for minimum size of letters for legend and for minimum length of color field for each raceway and cable size.

B. Colors for Raceways Carrying Circuits at 600 V and Less:

1. Black letters on an orange field.
2. Legend: Indicate voltage.

C. Self-Adhesive Vinyl Labels: Preprinted, flexible label laminated with a clear, weather- and chemical-resistant coating and matching wraparound adhesive tape for securing ends of legend label.

D. Self-Adhesive Vinyl Tape: Colored, heavy duty, waterproof, fade resistant; 2 inches (50 mm) wide; compounded for outdoor use.

2.3 POWER AND CONTROL CABLE IDENTIFICATION MATERIALS

A. Comply with ANSI A13.1 for minimum size of letters for legend and for minimum length of color field for each raceway and cable size.

B. Self-Adhesive Vinyl Labels: Preprinted, flexible label laminated with a clear, weather- and chemical-resistant coating and matching wraparound adhesive tape for securing ends of legend label.

C. Write-On Tags: Polyester tag, 0.015 inch (0.38 mm) thick, with corrosion-resistant grommet and cable tie for attachment to conductor or cable.

1. Marker for Tags: Permanent, waterproof, black ink marker recommended by tag manufacturer.

2. Marker for Tags: Machine-printed, permanent, waterproof, black ink marker recommended by printer manufacturer.

D. Snap-Around Labels: Slit, pretensioned, flexible, preprinted, color-coded acrylic sleeve, with diameter sized to suit diameter of raceway or cable it identifies and to stay in place by gripping action.

E. Snap-Around, Color-Coding Bands: Slit, pretensioned, flexible, solid-colored acrylic sleeve, 2 inches (50 mm) long, with diameter sized to suit diameter of raceway or cable it identifies and to stay in place by gripping action.

2.4 CONDUCTOR IDENTIFICATION MATERIALS

A. Color-Coding Conductor Tape: Colored, self-adhesive vinyl tape not less than 3 mils (0.08 mm) thick by 1 to 2 inches (25 to 50 mm) wide.

B. Self-Adhesive Vinyl Labels: Preprinted, flexible label laminated with a clear, weather- and chemical-resistant coating and matching wraparound adhesive tape for securing ends of legend label.

C. Marker Tapes: Vinyl or vinyl-cloth, self-adhesive wraparound type, with circuit identification legend machine printed by thermal transfer or equivalent process.

D. Write-On Tags: Polyester tag, [0.015 inch (0.38 mm)] thick, with corrosion-resistant grommet and cable tie for attachment to conductor or cable.

1. Marker for Tags: Permanent, waterproof, black ink marker recommended by tag manufacturer.
2. Marker for Tags: Machine-printed, permanent, waterproof, black ink marker recommended by printer manufacturer.

2.5 FLOOR MARKING TAPE

A. 2-inch- (50-mm-) wide, 5-mil (0.125-mm) pressure-sensitive vinyl tape, with black and white stripes and clear vinyl overlay.

2.6 UNDERGROUND-LINE WARNING TAPE

A. Tape:

1. Recommended by manufacturer for the method of installation and suitable to identify and locate underground electrical and communications utility lines.
2. Printing on tape shall be permanent and shall not be damaged by burial operations.
3. Tape material and ink shall be chemically inert, and not subject to degrading when exposed to acids, alkalis, and other destructive substances commonly found in soils.

B. Color and Printing:

1. Comply with ANSI Z535.1 through ANSI Z535.5.
2. Inscriptions for Red-Colored Tapes: ELECTRIC LINE, HIGH VOLTAGE.

3. Inscriptions for Orange-Colored Tapes: TELEPHONE CABLE, CATV CABLE, COMMUNICATIONS CABLE, OPTICAL FIBER CABLE..

C. Tag: Type I:

1. Pigmented polyolefin, bright-colored, continuous-printed on one side with the inscription of the utility, compounded for direct-burial service.
2. Thickness: 4 mils (0.1 mm).
3. Weight: 18.5 lb/1000 sq. ft. (9.0 kg/100 sq. m).
4. 3-Inch (75-mm) Tensile According to ASTM D 882: 30 lbf (133.4 N), and 2500 psi (17.2 MPa).

D. Tag: Type ID:

1. Detectable three-layer laminate, consisting of a printed pigmented polyolefin film, a solid aluminum-foil core, and a clear protective film that allows inspection of the continuity of the conductive core, bright-colored, continuous-printed on one side with the inscription of the utility, compounded for direct-burial service.
2. Overall Thickness: 5 mils (0.125 mm).
3. Foil Core Thickness: 0.35 mil (0.00889 mm).
4. Weight: 28 lb/1000 sq. ft. (13.7 kg/100 sq. m).
5. 3-Inch (75-mm) Tensile According to ASTM D 882: 70 lbf (311.3 N), and 4600 psi (31.7 MPa).

2.7 WARNING LABELS AND SIGNS

A. Comply with NFPA 70 and 29 CFR 1910.145.

B. Self-Adhesive Warning Labels: Factory-printed, multicolor, pressure-sensitive adhesive labels, configured for display on front cover, door, or other access to equipment unless otherwise indicated.

C. Baked-Enamel Warning Signs:

1. Preprinted aluminum signs, punched or drilled for fasteners, with colors, legend, and size required for application.
2. 1/4-inch (6.4-mm) grommets in corners for mounting.
3. Nominal size, 7 by 10 inches (180 by 250 mm).

D. Metal-Backed, Butyrate Warning Signs:

1. Weather-resistant, nonfading, preprinted, cellulose-acetate butyrate signs with 0.0396-inch (1-mm) galvanized-steel backing; and with colors, legend, and size required for application.
2. 1/4-inch (6.4-mm) grommets in corners for mounting.
3. Nominal size, 10 by 14 inches (250 by 360 mm).

E. Warning label and sign shall include, but are not limited to, the following legends:

1. Multiple Power Source Warning: "DANGER - ELECTRICAL SHOCK HAZARD - EQUIPMENT HAS MULTIPLE POWER SOURCES."

2. Workspace Clearance Warning: "WARNING - OSHA REGULATION - AREA IN FRONT OF ELECTRICAL EQUIPMENT MUST BE KEPT CLEAR FOR 36 INCHES (915 MM)."

2.8 INSTRUCTION SIGNS

A. Engraved, laminated acrylic or melamine plastic, minimum 1/16 inch (1.6 mm) thick for signs up to 20 sq. inches (129 sq. cm) and 1/8 inch (3.2 mm) thick for larger sizes.

1. Engraved legend with black letters on white face.
2. Punched or drilled for mechanical fasteners.
3. Framed with mitered acrylic molding and arranged for attachment at applicable equipment.

B. Adhesive Film Label: Machine printed, in black, by thermal transfer or equivalent process. Minimum letter height shall be 3/8 inch (10 mm).

C. Adhesive Film Label with Clear Protective Overlay: Machine printed, in black, by thermal transfer or equivalent process. Minimum letter height shall be 3/8 inch (10 mm). Overlay shall provide a weatherproof and UV-resistant seal for label.

2.9 EQUIPMENT IDENTIFICATION LABELS

A. Adhesive Film Label with Clear Protective Overlay: Machine printed, in black, by thermal transfer or equivalent process. Minimum letter height shall be 3/8 inch (10 mm). Overlay shall provide a weatherproof and UV-resistant seal for label.

B. Self-Adhesive, Engraved, Laminated Acrylic or Melamine Label: Adhesive backed, with white letters on a dark-gray background. Minimum letter height shall be 3/8 inch (10 mm).

C. Stenciled Legend: In nonfading, waterproof, black ink or paint. Minimum letter height shall be 1 inch (25 mm).

2.10 MISCELLANEOUS IDENTIFICATION PRODUCTS

A. Paint: Comply with requirements in painting Sections for paint materials and application requirements. Select paint system applicable for surface material and location (exterior or interior).

B. Fasteners for Labels and Signs: Self-tapping, stainless-steel screws or stainless-steel machine screws with nuts and flat and lock washers.

PART 3 - EXECUTION

3.1 INSTALLATION

A. Location: Install identification materials and devices at locations for most convenient viewing without interference with operation and maintenance of equipment.

B. Apply identification devices to surfaces that require finish after completing finish work.

C. Self-Adhesive Identification Products: Clean surfaces before application, using materials and methods recommended by manufacturer of identification device.

D. Attach signs and plastic labels that are not self-adhesive type with mechanical fasteners appropriate to the location and substrate.

E. System Identification Color-Coding Bands for Raceways and Cables: Each color-coding band shall completely encircle cable or conduit. Place adjacent bands of two-color markings in contact, side by side. Locate bands at changes in direction, at penetrations of walls and floors, at 50-foot (15-m) maximum intervals in straight runs, and at 25-foot (7.6-m) maximum intervals in congested areas.

F. Underground-Line Warning Tape: During backfilling of trenches install continuous underground-line warning tape directly above line at 6 to 8 inches (150 to 200 mm) below finished grade. Use multiple tapes where width of multiple lines installed in a common trench exceeds 16 inches (400 mm) overall.

G. Painted Identification: Comply with requirements in painting Sections for surface preparation and paint application.

3.2 IDENTIFICATION SCHEDULE

A. Accessible Raceways and Metal-Clad Cables, 600 V or Less, for Service, Feeder, and Branch Circuits More Than 30A, and 120V to ground: Install labels at 30-foot (10-m) maximum intervals.

B. Accessible Raceways and Cables within Buildings: Identify the covers of each junction and pull box of the following systems with self-adhesive vinyl labels with the wiring system legend and system voltage. System legends shall be as follows:
   1. Power.

C. Power-Circuit Conductor Identification, 600 V or Less: For conductors in vaults, pull and junction boxes, manholes, and handholes, use color-coding conductor tape to identify the phase.

   1. Color-Coding for Phase Identification, 600 V or Less: Use colors listed below for ungrounded service, feeder, and branch-circuit conductors.

      a. Color shall be factory applied
      b. Colors for 208/120-V Circuits:

         1) Phase A: Black.
         2) Phase B: Red.
         3) Phase C: Blue.

      c. Field-Applied, Color-Coding Conductor Tape: Apply in half-lapped turns for a minimum distance of 6 inches (150 mm) from terminal points and in boxes where splices or taps are made. Apply last two turns of tape with no tension to prevent possible unwinding. Locate bands to avoid obscuring factory cable markings.

D. Install instructional sign including the color-code for grounded and ungrounded conductors using adhesive-film-type labels.

E. Conductors to Be Extended in the Future: Attach write-on to conductors and list source.

F. Auxiliary Electrical Systems Conductor Identification: Identify field-installed alarm, control, and signal connections.

1. Identify conductors, cables, and terminals in enclosures and at junctions, terminals, and pull points. Identify by system and circuit designation.
2. Use system of marker tape designations that is uniform and consistent with system used by manufacturer for factory-installed connections.
3. Coordinate identification with Project Drawings, manufacturer's wiring diagrams, and the Operation and Maintenance Manual.

G. Locations of Underground Lines: Identify with underground-line warning tape for power, lighting, communication, and control wiring and optical fiber cable.

1. Limit use of underground-line warning tape to direct-buried cables.
2. Install underground-line warning tape for both direct-buried cables and cables in raceway.

H. Workspace Indication: Install floor marking tape to show working clearances in the direction of access to live parts. Workspace shall be as required by NFPA 70 and 29 CFR 1926.403 unless otherwise indicated. Do not install at flush-mounted panelboards and similar equipment in finished spaces.

I. Warning Labels for Indoor Cabinets, Boxes, and Enclosures for Power and Lighting: Self-adhesive warning labels.

1. Comply with 29 CFR 1910.145.
2. Identify system voltage with black letters on an orange background.
3. Apply to exterior of door, cover, or other access.
4. For equipment with multiple power or control sources, apply to door or cover of equipment including, but not limited to, the following:

    a. Power transfer switches.
    b. Controls with external control power connections.

J. Operating Instruction Signs: Install instruction signs to facilitate proper operation and maintenance of electrical systems and items to which they connect. Install instruction signs with approved legend where instructions are needed for system or equipment operation.

K. Emergency Operating Instruction Signs: Install instruction signs with white legend on a red background with minimum 3/8-inch- (10-mm-) high letters for emergency instructions at equipment used for power transfer.

L. Equipment Identification Labels: On each unit of equipment, install unique designation label that is consistent with wiring diagrams, schedules, and the Operation and Maintenance Manual. Apply labels to disconnect switches and protection equipment, central or master units, control panels, control stations, terminal cabinets, and racks of each system. Systems include power, lighting, control, communication, signal, monitoring, and alarm systems unless equipment is provided with its own identification.

1. Labeling Instructions:

    a. Indoor Equipment: Engraved, laminated acrylic or melamine label. Unless otherwise indicated, provide a single line of text with 1/2-inch- (13-mm-) high letters on 1-1/2-inch- (38-mm-) high label; where two lines of text are required, use labels 2 inches (50 mm) high.
    b. Outdoor Equipment: Engraved, laminated acrylic or melamine label.
    c. Elevated Components: Increase sizes of labels and letters to those appropriate for viewing from the floor.
    d. Unless provided with self-adhesive means of attachment, fasten labels with appropriate mechanical fasteners that do not change the NEMA or NRTL rating of the enclosure.

END OF SECTION 260553

SECTION 262416 - BRANCH CIRCUIT PANELBOARDS AND LOAD CENTERS

SECTION 262416 - BRANCH CIRCUIT PANELBOARDS AND LOAD CENTERS

PART 1 GENERAL

1.01 DESCRIPTION

A Provide the branch circuit load centers, panelboards, and power distribution panelboards indicated on the drawings, complete with all circuit breakers and spaces as scheduled on the drawings.

1.02 QUALITY ASSURANCE

A Branch circuit load centers, panelboards, and power distribution panelboards and the branch circuit breakers enclosed therein shall be General Electric, Schneider Electric or Siemens.

B Panelboards shall be factory assembled.

1.03 SUBMITTALS

A Shop drawings shall clearly indicate enclosure size, gutter space, breaker frame sizes and trips, and main bus type and rating.

PART 2 PRODUCTS

2.01 BRANCH CIRCUIT PANELBOARDS

A Load Centers and panelboards shall be of the automatic circuit breaker type, three-phase, four-wire, solid neutral or single-phase , three wire, solid neutral with main lugs sized for each respective feeder and main bus of 98% conductivity silver plated copper or aluminum equal to or greater in capacity than the rating of the overcurrent device serving each respective panel. Panelboards shall bear UL labels.

B Panelboards shall be flush or surface mounted, as scheduled, having a minimum width can of 20", with baked-on enamel trim, adjustable trim clamps and door with chromium plated combination cylinder lock and catch. Provide a typewritten directory, under plastic, with all spares marked in pencil.

C Load Centers shall be flush or surface mounted, as scheduled, having a minimum width can of 14", with baked-on enamel trim, and screw-on door. Provide written directory in permanent ink.

D The neutral bus shall utilize set-screw to bond the neutral wire to the neutral bus through holes drilled in the neutral bar.

E All circuit breakers shall be UL labeled and shall be thermal and magnetic molded cast type, quick-make and quick-break both on manual and on magnetic operation, and shall be bolted to the panel bus. Load Centers shall have bolt-on breakers. Breakers shall be of the over-the-center toggle operating type, with the handle going to a position between "ON" and "OFF" to indicate automatic tripping. All multi-pole breakers shall be internal common trip. Breakers shall not be rated at less than 10,000 RMS symmetrical amperes. See drawings for available fault current at each

panel. AIC ratings shall be next standard size up from fault current indicated on drawings.

F All molded case main circuit breakers shall be vertically mounted with the handle up for "ON" and down for "OFF" and shall be UL approved for feeding in the bottom and out the top.

G Each load center or panelboard, as a complete unit, shall have a rating equal to or greater than the integrated rating shown on the panelboard schedule on the plans. Such ratings shall be established by tests with the circuit breakers mounted on the panelboard. The short circuit test on the circuit breaker and on the panelboard structure shall be made simultaneously by connecting the fault to each panelboard breaker with the panelboard connected to its rated voltage source.

H Shop drawings for the panels shall show that all of the aforementioned requirements have been incorporated into each panel. Panels shall be Square D, General Electric, or Siemens. The branch circuit breaker arrangement in each respective panel shall be as scheduled on the plans.

I Cabinets shall be of code gauge steel with overlapped riveted or welded corners and with edges turned to receive trim. Each trim shall be of the same size as that of its cabinet or one and one half inches (1-1/2") oversize, according to whether the cabinet required is surface-mounted or flush-mounted. Trim shall be held in place by hidden trim clamps or other adjustable fasteners which will permit adjustment. Doors shall be provided with latches, locks and keys.

PART 3 EXECUTION

3.01 INSTALLATION

A Provide branch circuit load centers, panelboards, and power distribution panelboards where indicated and as scheduled on the drawings.

B Unless otherwise indicated on the drawings, provide from each flush mounted panelboard, four (4) 3/4" empty conduits stubbed out into ceiling space and capped.

C Top of panel trim shall, in general, be at the same height above the floor throughout the building. See drawings for mounting heights in handicap apartment units.

D No breaker handle shall be higher than 6'-0" above the floor.

E Fasten cabinets securely to wall or structure. Flush cabinets shall have trim which covers wall openings; set cabinets so that trim will fit smooth and flush all around cabinets.

F All conductors within the cabinets of power distribution and branch circuit panelboards shall be neatly laced together with plastic cable clamps, nylon banding or other approved means, and shall be of such length to allow ease of bending, (in small sizes, bends shall be "square"), neat and strain-free connections.

G Each and every branch circuit in all panelboards shall have typewritten identification with complete description of load served on index card.

H The designation of each panelboard (PANEL LA, etc.) shall be engraved on a laminated black /white plastic plate in 1/2 inch high letters and affixed to the panelboard front. On the same plate, below the designation, engrave in 1/4 inch letters the panel voltage. Nameplate shall be fastened to panelboard with sheet metal screws.

End

SECTION 262713 - ELECTRICITY METERING, MODULAR MULTI-TENANT

PART 1 - GENERAL

1.01 SCOPE

A. Furnish and install modular tenant metering of the types, sizes and quantities indicated on the contract drawings. Provide all lugs and accessories necessary for proper installation and operation.

1.02 RELATED DOCUMENTS

A. All drawings and general provisions of the Contract including DIVISION 1 requirements apply to this section.

1.03 SUBMITTALS

A. Provide product information prior to fabrication and installation. Product data shall include all dimensions, electrical ratings and maintenance data (if applicable).

1.04 RELATED STANDARDS

A. The modular tenant metering and all accessories shall be designed, manufactured and tested in accordance with the latest applicable standards of the following:
   i. ANSI
   ii. NEMA
   iii. UL50, UL67, UL414, UL 489
   iv. NFPA 70, NEC

1.05 QUALITY ASSURANCE

A. The meter center manufacturer shall also be the manufacturer of the circuit breakers.

B. Manufacturer shall have produced similar electrical equipment for a minimum period of 10 years.

C. Products shall be listed by Underwriters Laboratories, Inc.

1.06 DELIVERY, STORAGE AND HANDLING

A. Handle and store equipment in accordance with manufacturer's Installation and Maintenance Manuals. One (1) copy of this document to be provided with the equipment at time of shipment.

PART 2 - PRODUCTS

2.01 MANUFACTURERS

A. The modular-tenant metering shall be manufactured by Siemens Energy & Automation or pre-approved equal. Approved manufacturers are as follows:
   1. Siemens
   2. Schneider Electric (Square D)
   3. General Electric

2.02 GENERAL REQUIREMENTS

A. The metering specified herein shall be designed and constructed for use in residential or commercial applications. The metering shall be compact, pre-bussed modular construction with the ability to add modules to either side in the future.

B. The meter center shall meet or exceed the local utility and "authority having jurisdiction" requirements". It shall consist of an incoming service entrance module and meter modules. The modular metering shall be UL listed for short circuit current ratings as indicated on riser diagrams. The incoming service shall be as indicated on riser diagrams.
   1. The service entrance module shall be of the ratings shown on the drawings. The main shall be:
      a. Circuit Breaker for bottom entry. The main breaker shall be fully rated.
   2. The meters shall be stacked high in accordance with power company requirements. Coordinate exact minimum and maximum height requirements the power company prior to bid.

C. The meter socket devices shall have individual covers of ring or ringless style design coordinate exact requirements with Power Company prior to bid. Meter sockets shall have a sealing provision.

D. The meter sockets shall be made of high impact resistant, non-tracking, glass reinforced polyester resin. Socket jaws shall be tin-plated copper with spring steel reinforced clips. Individual jaws can be replaced from the front by removing the retaining nut. The sockets shall be rated as indicated on drawings continuous and as shown on the drawings. Phase balancing shall be by the factory in assembled stack modules. The 5th jaw required for single-phase meters on three phase supply systems shall also be factory installed. Through bus shall be rated 1200 amperes. Sockets shall also include, where required by code or indicated, the following:
   1. 5th Jaw (Coordinate with Power Company prior to bid.)
   2. Horn Bypass (Coordinate with Power Company prior to bid.)

E. The bus bar shall be tin-plated aluminum. All unmetered bus shall be barriered and protected. Inaccessible bus connections shall be welded to assure continued reliability.

F. The joint stacks and meter base bus connections are bolted and accessible from the front. The joint stack shall be a single bolt construction using an assembly of glass reinforced polyester insulator disks sandwiched between heavy-duty conductor disks.

G. All joints shall be tightened to 35 ft. lbs. of torque.

H. Contractor to install spacers in meter stack to allow clearance for Power Company testing. Coordinate exact requirements with Power Company prior to bid.

2.03 SWITCH ENCLOSURES

A. The modular-tenant metering shall be continuous duty rated. The enclosure shall be built to NEMA 3R standards.
   1. All modules shall have weather proof rain caps and padlock-able tenant breaker covers. The enclosures shall be UL Listed rated fabricated from zinc-coated G90 steel and painted with an ANSI 61 light gray paint applied by electro-deposition process. The enclosures shall be mounted as shown on the drawing.
   2. All modules shall have the conduits exit out the bottom or bottom rear.

2.04 FACTORY TESTING

A. Standard factory tests shall be performed on the equipment in accordance with the latest version of applicable NEMA and UL standards.

PART 3 - EXECUTION

3.01 INSTALLATION

A. The contractor shall install all equipment in accordance with the contract drawings and manufacturers recommendations.

B. All metering sections shall be installed plumb and bottom aligned.

3.02 ADJUSTMENTS AND CLEANING

A. The contractor shall install the necessary accessories in order to place the modular-tenant metering in final operating condition.

3.03 TESTING

A. Check tightness of all accessible mechanical and electrical connections to assure they are torqued to the minimum acceptable manufacture's recommendations.

B. Check for proper grounding, fastening and alignment.

3.04 WARRANTY

A. Equipment manufacturer warrants that all goods supplied are free of non-conformities in workmanship and materials for one year from date of initial operation, but not more than eighteen months from date of shipment.

END

SECTION 262726 - WIRING DEVICES

PART 1 GENERAL

1.01 DESCRIPTION

A Description of System: Provide wiring devices complete with all required accessories as indicated on the drawings and specified herein.

1.02 QUALITY ASSURANCE

A Acceptable Manufacturers: Wiring devices and cover plates shall be Arrow-Hart, Bryant, General Electric, Hubbell, Leviton or Sierra.

B Wiring devices shall comply with applicable sections of NEMA Standard WD-1.

C All special purpose receptacles shall be NEMA standard configuration.

PART 2 PRODUCTS

2.01 WALL SWITCHES

A Wall switches shall be flush, specification grade, totally enclosed, self-grounding type, designed for quiet operation. Switches shall be rated 20 amperes, for operation at 120/277 volts and shall be of type as follows:

(1) Single Pole: Hubbell #1221

(2) Double Pole: Hubbell #1222

(3) Three-Way: Hubbell #1223

(4) Four-Way: Hubbell #1224

B Color shall be ivory, gray, beige, white, red, black or brown as selected by the Architect. Comparative switches by Leviton, Arrow-Hart, Eagle or Pass & Seymour are acceptable as equal.

C Switches utilized as local equipment or motor disconnect switch shall be as specified in SECTION 262817 "DISCONNECTS".

2.02 RECEPTACLES

A Receptacles shall be specification grade, straight blade or locking, grounding type, of ampere and voltage rating and NEMA configuration as indicated on the Drawings. Receptacles shall be manufactured by Hubbell, Eagle, Arrow-Hart, Leviton or Pass & Seymour, per the following Hubbell Catalog Numbers:

Device Type	Volts, Phase, Amps	Hubbell #
NEMA 5-15R Duplex	120V, 1 Phase, 15A	5262
NEMA 5-15R Single	120V, 1 Phase, 15A	5261
NEMA 5-20R Duplex	120V, 1 Phase, 20A	5362
NEMA 5-20R Single	120V, 1 Phase, 20A	5361
NEMA 5-15R GFI Duplex	120V, 1 Phase, 15A	GF-5262

NEMA 5-15R IG Duplex	120V, 1 Phase, 15A	IG-5262
NEMA 6-20R (Single)	208V, 1 Phase, 20A	5461

B Other convenience outlets of different configuration or rating are indicated by special symbol and notes on the drawings.

C Color shall be ivory, gray, beige, white, red, black or brown as selected by the Architect.

D Comparative receptacles by Leviton, Arrow-Hart, Eagle or Pass & Seymour are acceptable as equal.

2.03 DEVICE COVER PLATES

A Cover plates for flush-mounted devices shall be plastic, smooth surface, mid-way size. Color shall be ivory, gray, beige, white, red, black or brown as selected by the Architect.

B Cover plates shall be manufactured by Hubbell, Arrow-Hart, Leviton or Pass & Seymour.

C Telephone outlet cover plates shall have an RJ-45 jack connected to cable.

D Where more than one device is indicated at a location, the devices shall be mounted in combined sectional gang boxes and covered jointly by a common plate.

E Cover plates for surface mounted devices shall be formed steel with cadmium plating.

F Weatherproof receptacles shall be equipped with double-life gasketed weatherproof plate, Arrow-Hart #4500, or equal.

PART 3 EXECUTION

3.01 INSTALLATION

A Cover Plates: Cover plates shall be provided for all devices, including wall switches, wall telephone outlets and receptacles. Where more than one flush device occurs at the same location, arrange in gangs, under one cover plate.

B Wall Receptacles: Provide an 8" long flexible pig-tail green ground wire from grounding lug of all grounding type receptacles to a suitable bonding device on the conduit or the outlet box. Ground wire shall not be connected to screw which attaches receptacle to outlet box.

C For all device types other than NEMA 5-15R, 5-20R and 6-20R provide a matching cord and plug for each receptacle installed. Deliver such plugs to the Owner at completion of construction.

D All devices installed in outlet boxes shall be screwed tight to the box before the cover plate is installed. Cover plate shall not be used as a means of tightening the device in place.

End

SECTION 262817 – DISCONNECT SWITCH

PART 1 GENERAL

1.01 DESCRIPTION

A. Provide disconnect devices complete with all required accessories as indicated on the drawings and specified herein.

1.02 QUALITY ASSURANCE

A. Acceptable Manufacturers:
   1. Safety Switches: General Electric.
   2. Individually Enclosed Circuit Breakers: General Electric.

PART 2 PRODUCTS

2.01 SAFETY SWITCHES

A. Safety switches shall be general duty, horsepower rated, fusible or non-fusible as indicated or noted on the drawings. They shall be of ampere rating and number of poles as noted on the drawings and of voltage rating as required for the voltage of the circuit in which used.

B. For small loads -- not larger than one horsepower or 15 amperes -- disconnect switches shall be toggle devices with thermal overloads equal to Square-D Class 2510, SPST or DPST as required.

C. Enclosure shall be NEMA 1 for indoor locations and NEMA-3R for outdoor locations, unless otherwise noted. Covers shall be interlocked to prevent opening, unless switch is in "OFF" position.

D. Switches shall have a factory applied gray enamel finish.

2.02 FUSES

A. Fuses shall be dual-element, Class RK1, Bussmann "Limitron" for 600 amperes and below and Class "L" Bussmann "Hi-Cap" for 601 amperes and above.

B. In control circuits and in specialized equipment, protective fusing shall be as required by the systems or equipment supplier.

PART 3 EXECUTION

3.01 INSPECTION

A. Verify the nameplate data of equipment to be served with the information shown on the drawings.

3.02 INSTALLATION

A. Mounting: The circuit breakers and safety switches shall be installed on walls, power backboards, plenums, etc., as indicated by the drawings. Unless otherwise noted, they shall be installed 5'-0" above finished floor to top of enclosure.

B. Fuses: Provide fuses for all new fusible equipment furnished under this Division of the Specifications.

END OF SECTION

SECTION 265100 - LIGHTS

PART 1 GENERAL

1.01 DESCRIPTION

A. This Section specifies the lighting system requirements.

B. All fixtures shall be properly installed, completely wired, connected to current source, provided with lamps, ready to use.

C. Where indicated on the drawings, certain lighting circuits shall be controlled by time switches and or photocell switches for automatic operation.

1.02 RELATED WORK SPECIFIED ELSEWHERE

A. Refer to another Division for the ceiling systems.

B. The lighting system shall be coordinated with ceiling systems and other architectural finishes in which the fixtures are installed or to which they are attached. The Contractor shall obtain all appropriate architectural plans and details to ensure that all trims and mounting hardware are completely compatible with each application.

PART 2 PRODUCTS

2.01 LIGHTING FIXTURES

A. The general specifications for each lighting fixture type are as indicated on the lighting fixture schedule. Where a manufacturer's name and catalog number are indicated, the manufacturer's specification for that product is incorporated herein by reference.

B. Each fixture shall be furnished with all required trim and mounting hardware required to install the fixture in, on or suspended from, the ceiling or other architectural finish.

C. Suspended fixtures shall be furnished with pendants or cables specifically designed for each application. Stem or cable canopies shall be furnished to fit flush with the ceiling or wall finish regardless of attaching method.

D. Fluorescent troffer type fixtures shall have a post-fabrication applied white enamel finish with a minimum reflectance of 86%. Lenses shall be as indicated in the lighting fixture schedule, some are special.

E. Surface mounted fluorescent strips or industrial fixtures shall be provided with 1-1/2" offset mounting brackets. Provide a minimum of two for each fixture and not less than two per 4 feet of length for continuous rows or for fixtures longer than 4 feet.

2.02 BALLASTS

A. Electronic ballasts shall be solid state, full light output, Class "P" and shall bear U.L. certification. Ballasts shall be Universal "Triad", or equal by Advance, Thomas Industries or Valmont.

B. Ballasts for compact fluorescent (PL or Biax) lamps shall be high power factor.

C. Ballasts for fluorescent fixtures installed in unheated spaces or for exterior applications, shall be

low temperature start, rated 0°F.

2.03 LAMPS

A. Fluorescent lamps shall be energy saving type, of size, 35K and wattage as scheduled on the drawings. They shall be General Electric "Watt-Miser", or equal as manufactured by Sylvania or Philips-Norelco.

B. Incandescent lamps shall be of type and size as scheduled on the drawings. They shall be rated 130 volts for longer life.

C. Other lamps, such as high intensity discharge or quartz, shall be of size and type as scheduled on the drawings and shall in all cases be compatible with the fixture in which they are to be used.

PART 3 EXECUTION

3.01 INSTALLATION AND SUPPORTING METHODS

A. Surface mounted fixtures on suspended acoustical ceilings shall be firmly mounted on an outlet box which has premanufactured support brackets which span a minimum of two T-bars or support runners and attach to T-bars or support runners at a minimum of four (4) points (or continuously). Surface mounted linear fluorescent fixtures shall be attached to T-bars with caddy clips at a maximum of 4' on center. (Fluorescent strips shall use 1-1/2" offset brackets).

B. Surface mounted (wall or ceiling) fixtures on hard finish construction such as gypsum board, stucco, plaster or E.I.F.S. shall be attached to outlet boxes which are supported by a premanufactured brace which spans a minimum of two ceiling (or wall) structural members. Outlet boxes which support fixtures weighing 20 pounds or more shall have two (2) such braces.

C. Recessed fixtures shall be installed utilizing premanufactured mounting brackets which span a minimum of two (2) ceiling structural members at a minimum of four (4) points (or continuously). Conduit, wire or pipe strapping may not be used for such purposes. Fixtures which weigh more than 20 pounds shall additionally be supported from building structure by a minimum of four (4) safety wires or cables (minimum 12 Ga. Steel).

D. Suspended fixtures shall be mounted to outlet boxes and ceiling structural members installed as described for surface mounted fixtures using pendants or cables as indicated. There shall be not less than two (2) such pendants or cables for each 8 foot long fixture. Pendants or cables shall be designed to allow suspended fixtures to hang plumb and level for their entire length (or length of continuous rows), regardless of ceiling slope or irregularities. Canopies shall fit flush with ceiling finish on all sides.

3.02 FIXTURE TRIM

A. All fixtures, regardless of specified catalog number or mounting shall be provided with the proper trim and hardware for each application. Fixture trims shall completely cover all rough openings and fit flush with surface on all sides.

3.03 FIXTURE WIRING

A. Fixtures in non-accessible ceilings shall be directly wired using "THHN (or THWN in wet locations)" cable.

B. Outlet boxes for surface mounted or suspended fixtures shall be wired using "THHN (or THWN in wet locations)" cable.

C. Surface mounted or suspended continuous rows of fluorescent fixtures may use premanufactured plug-in wiring systems which utilize polarized fully rated nylon connectors in each fixture for continuous row energizing. Unswitched circuits for lamps connected to onboard emergency battery packs shall be directly wired using conduit.

3.04 LAMPS

A. All lamps shall be new and burning at the time of substantial completion. Fluorescent lamps which have been in use by the Contractor for 180 days or more shall be replaced. Lamps which are flickering discolored or producing deficient color or lumen output shall be replaced. Incandescent lamps in use for 100 hours or more shall be replaced.

3.05 BALLASTS

A. All ballasts shall be new and operational at the time of substantial completion. All ballasts which are noisy or producing reduced lighting levels shall be replaced. Ballasts shall be covered by the Contractor's warranty as specified under DIVISION 1.

END OF SECTION

SECTION 265113 - INTERIOR LIGHTING FIXTURES, LAMPS AND BALLASTS

PART 1 - GENERAL

1.1 SUMMARY

A. Section Includes:
   1. LED dimming driver.

B. Related Sections:
   1. Section 265100 – Interior Lighting:

1.2 REFERENCES

A. International Electrotechnical Commission ().
   1. (IEC) 801-2 Electrostatic Discharge Testing Standard.
   2. IEC/EN 60669-2-1 Switches for household and similar fixed electrical installations - electronic switches.

B. International Organization for Standardization (ISO)
   1. 9001 (2000) – Quality Management Systems.

C. Underwriters Laboratories, Inc. (UL) ():
   1. 8750 (2009) – LED drivers

1.3 DESCRIPTION

A. LED dimming driver.
   1. 3-Wire (Line Voltage Controlled) Dimming Drivers
   2. Digital (Low Voltage Controlled) Dimming Drivers

1.4 SUBMITTALS

A. Specification Conformance Document: Indicate whether the submitted equipment:
   1. Meets specification exactly as stated.
   2. Meets specification via an alternate means and indicate the specific methodology used.

B. Product Data: Catalog cut sheets with performance specifications demonstrating compliance with specified requirements.

1.5 QUALITY ASSURANCE

A. Manufacturer: Minimum 5 years experience in manufacture of electronic lighting controls.

B. Manufacturer's Quality System: Registered to ISO 9001:2000 Quality Standard, including in-house engineering for product design activities.

C. Recognized by UL. Provide evidence of compliance upon request.

1.6 PROJECT CONDITIONS

A. Do not install equipment until following conditions can be maintained in spaces to receive equipment:
   1. Ambient temperature: 10 degrees to 40 degrees C (50 degrees to 140 degrees F).
   2. Relative humidity: Maximum 90 percent, non-condensing.
   3. Protected from dust and excess moisture during installation.

1.7 WARRANTY

A. Provide manufacturer's warranty covering 3 years with factory start-up on drivers from date of purchase.

1.8 MAINTENANCE MATERIAL SUBMITTALS

A. Make replacements available for minimum of ten years from date of manufacture.

PART 2 - PRODUCTS

2.1 MANUFACTURERS

A. Acceptable Manufacturer: Lutron Electronics Co., Inc. or approved equal by engineer.

2.2 GENERAL

A. Ten-year operational life while operating with a case temperature range of 0 degrees C to 62 degrees C and 90 percent non-condensing relative humidity.

B. Designed and tested to withstand electrostatic discharges up to 15,000 V without impairment per IEC 801-2.

C. Electrolytic capacitors to operate at least 20 degrees C below the capacitor's maximum temperature rating when the driver is under fully-loaded conditions and case temperature is 62 degrees C.

D. Maximum inrush current of 2 amperes for 120V drivers.

E. Withstand up to a 4,000 volt surge without impairment of performance as defined by ANSI C62.41 Category A.

F. Manufactured in a facility that employ ESD reduction practices in compliance with ANSI/ESD S20.20.

G. Inaudible in a 27 dBA ambient.

H. No visible change in light output with a variation of +/- 10 percent line voltage input.

I. Total Harmonic Distortion less than 20 percent and meet ANSI C82.11 maximum allowable THD requirements

J. Drivers to track evenly across
   1. Multiple fixtures.
   2. All light levels.

K. Stand by power is <1.0Watts when using digital EcoSystem controls.

L. Compatibility of driver and LED light engine must be tested and ensured by driver manufacturer.

2.3 3-WIRE CONTROL

A. Continuous dimming from 100 percent to 1 percent relative light output.

B. Provide integral fault protection to prevent ballast failure in the event of an input mis-wire.

2.4 ECOSYSTEM CONTROL

A. Ability to operate with installed or specified building control system

2.5 SOURCE QUALITY CONTROL

A. Perform full-function testing on 100 percent of all drivers at the factory.

B. Perform burn-in at 104 degrees F ambient temperature on 100 percent of all drivers at the factory.

PART 3 - EXECUTION

3.1 INSTALLATION

A. Install equipment in accordance with manufacturer's installation instructions.

B. Provide complete installation of system in accordance with Contract Documents.

C. Lead lengths to LED light engine/array not to exceed three feet.

3.2 SERVICE AND SUPPORT

A. Start-up
   1. Provide factory-certified field service engineer to a site visit to ensure proper installation and operation under following parameters:
      a. Qualifications for factory-certified field service engineer:
         1) Minimum experience of 2 years training in the electrical/electronic field.
         2) Certified by the equipment manufacturer on the system installed.
      b. Make a visit upon completion of installation to:
         1) Verify connection of power feeds control circuits
         2) Check performance.
         3) Train building owner how to operate LED drivers.

B. Tech Support
   1. Provide factory direct technical support hotline 24 hours per day, 7 days per week.

3.3 MAINTENANCE

A. Offer renewable service contract on yearly basis, to include parts, factory labor, and annual training visits. Make service contracts available up to ten years after date of commissioning.

END OF SECTION

SECTION 266100 - TECHNOLOGY EQUIPMENT RACEWAYS

PART 1 - GENERAL

1.01 RELATED DOCUMENTS

A DRAWINGS AND GENERAL PROVISIONS of the contract, including General and Supplementary Conditions and other Division-1 Specification sections, apply to the work of this section.

B All work performed under this Section of the work is subject to all requirements contained under Section ----------, "Electrical General Requirements".

1.02 CONTENTS

A Described herein are the following:

1. Description
2. Raceway Systems
3. Outlet Locations
4. Blank Cover plates
5. Electrical Interference
6. Work by Others

1.03 DESCRIPTION

A Technology System Equipment/Structured Wiring will be provided by the Owner under a separate contract and is not to be included in this Contractors bid. The ultimate system will provide media retrieval, storage and display, data and/or telephone distribution, audio/visual, security, etc.

B The electrical Contractor shall provide and install electrical raceways, boxes enclosures and power as required to serve the technology equipment:

1. System 120 volt receptacles and power services.
2. Low voltage data and or telephone/data outlets.
3. Raceways, wire-ways, conduit and boxes, conduit sleeves, etc.

C Provide all items, articles, materials, operations or methods listed, mentioned or scheduled on Drawings and/or herein, including all labor, materials, equipment and incidentals necessary and required for the completion of raceways, boxes, enclosures and power services described above and indicated on plan.

1.04 SHOP DRAWINGS

A Submit shop drawings after consultation with the Owner and the low voltage vendors (telephone, data, CATV, CCTV, security devices, audio/visual, etc.) showing the various pieces of equipment and their rough-in location, what size box and what system they serve.

B Obtain information from the various vendors regarding the size and routing of conduit that is required for the system.

PART 2 - PRODUCTS

2.01 RACEWAY SYSTEMS

A All conduit, wireways, raceways, boxes, sleeves, etc. required for the installation of low voltage cabling shall be provided by the electrical contractor. Furnish and install conduits, wireways, raceways, boxes, outlets, etc. as indicated on plan and herein specified. Refer to section 260502 Basic Materials and Methods, for specifications of wireways, etc.

B Except as otherwise indicated, within class rooms and finished spaces, horizontal and vertical finished wireways shall be used and shall be installed for a neat and finished appearance. All edges shall be cleanly cut without sharp edges or unevenness.

C Where wireways are used, they shall be installed perpendicular to and/or parallel to walls and ceilings. Installation shall be as inconspicuously as possible. Risers should typically be located in the corner of a room or adjacent to white/black boards, wood trim, etc.

D Above ceilings, conduit shall be used for 120 volt wiring.

E In unfinished spaces, use surface vertical raceway on wall.

F Conduit, raceways, etc. shall be installed similar to those specified for distribution systems and terminate with bushings.

G All empty conduit shall have a nylon pull cord.

H No conduit less than 1" shall be used.

I The raceway system shall be connected to the building common ground.

J Consult "Electrical Basic Materials and Methods" Section of this Specification for complete description of conduit systems.

K Outlet boxes shall be 4-11/16" square x 2-1/4" deep with plaster ring and cover plate unless otherwise indicated on plan.

L Wiring will be installed without conduit in areas without ceilings provided wiring is at least 10 feet above the floor.

M Wiring will be installed without conduit above lay-in type 2' x 2' or 2' x 4' acoustical ceilings.

N Wiring will be installed in conduit above all ceilings other than lay-in type acoustical ceilings.

O Wiring installed vertically below ceilings will be installed in conduit or finished metal raceway.

P In areas without ceilings, wiring installed below 10 feet AFF or below bottom cord of truss or steel will be installed in conduit.

Q Conduit shall be in accordance with the National Electrical Code (NEC), local and state requirements.

R Conduit fill shall not exceed 40 percent of interior cross sectional area.

S Conduit shall be 3/4-inch (19.1 mm) minimum.

2.02 OUTLET LOCATIONS

A Final location of outlets, wireways, raceways, etc. indicated on plan to serve technology equipment shall be coordinated with the Owner in field.

2.03 BLANK COVERPLATES

A All low voltage non-wireway wall outlets, shall be left with a blank cover plate

which can be replaced at a later date with a cover plate and data jacks.

B All low voltage wireway outlets, shall be left with a blank cover plate with a removable insert. The removal of the insert shall allow data jacks to be installed at a latter date.

C All outlets associated with sound field equipment shall be complete as required for the operation of the equipment.

2.04 ELECTRICAL INTERFERENCE

A All raceways, wireways, boxes, etc. shall be installed to avoid electrical EMI/RFI interference. Installation shall be subject to the following:

1. All installation work shall be done in a neat, high quality manner and in conformity with all but not limited to, federal, state, local building codes and the NEC.
2. Installation should be in accordance with the requirements of TIA/EIA-568A.
3. Conduits and raceways shall be installed so that cables can be installed with sufficient bend radius so as not to kink, shear, or damage cable.
4. Conduit or raceways shall be installed as high as possible within the ceiling space.
5. Conduit or raceways shall not be installed within 6 inch of lighting fixtures.
6. Conduit or raceways shall not be installed within 36 inch of motors or motorized equipment.
7. Fire stop all sleeves through floors and walls that are rated, see architectural plans for rated walls.

2.05 WORK BY OTHERS

A The owners technology contractor will perform the following work:

1. Furnish and installation of all system low voltage telephone and data cabling.
2. Furnish and install all jacks with cover plates required for telephone and data outlets.
3. Furnish and install all telephone and data distribution equipment.

END OF SECTION 266100

SECTION 283111 FIRE ALARM SYSTEM

PART 1 – GENERAL

1.01 SCOPE

A. This Specification provides for the requirements for a fire detection and alarm system. The system shall include, but not be limited to, control panel, alarm initiating and indicating peripheral devices, conduit, wire and accessories required to provide a complete operational system.

B. General Conditions, Supplementary Conditions and General Requirements shall govern the work of this Section.

C. Pricing for Fire Alarm System shall be indicated as a separate line item in the Contract Pricing. Provide pricing for an addressable system as specified as the Base. Provide alternate pricing for a hardwired Fire Alarm System with the same basic functional capabilities.

1.02 STANDARDS

A. The equipment and installation shall comply with the current applicable provisions of the following standards:

1. National Electrical Code, Article 760
2. National Fire Protection Standards
3. Local and State Building Codes
4. All requirements of the Local Authority Having Jurisdiction
5. The system and all components shall be listed by Underwriters Laboratories, Inc., for use in fire protective signaling systems.

1.03 SUBMITTALS

A. The contractor shall submit complete documentation showing the type, size, rating, style, catalog number, manufacturers' names, photos and/or catalog data sheets for all items to ensure compliance with these Specifications. Battery size calculations shall also be provided as part of submittal data.

B. Only equipment devices have been shown on the contract drawings. Any specific wiring between equipment shown is not for construction purposes. The contractor shall submit for approval the complete layout of the entire system, showing wiring and all equipment.

C. All equipment proposed as equal to that specified herein, shall conform to the standards herein. For equipment other than that specified, the contractor shall supply proof that such substitute equipment does, in fact, equal or exceed the features, functions, performance and quality of the specified equipment.

1.04 SYSTEM FUNCTION

A. Alarm Detection:

1. When a fire alarm condition is detected by one of the system initiating devices, the following functions shall immediately occur:

    a. The System alarm LED shall flash.

    b. A local sounding device in the panel shall be activated. The 80-character LCD display shall indicate all pertinent information associated with the alarm and its location.

    c. All automatic programs assigned to the alarm point shall be executed and the associated indicating devices and relays activated. These shall include, but not be limited to, the following:

        1) All audible alarm signals shall sound at a march time cadence.

        2) All visual alarm signals shall flash at the same rate.

        3) Indicate the actuated zone on the graphic panel.

        4) Activate a circuit to report the alarm to a U.L. certified central station via telephone lines.

        5) Operate relays associated with air handling equipment fan starters so that the starter will shut down the fan motor in the system where smoke was detected in the supply or return air duct.

        6) Indicate the actuated zone on the remote annunciator.

B. System Trouble Detection:

1. When a trouble condition is detected by one of the system initiating devices, the following functions shall immediately occur:

    a. The System Trouble LED shall flash.

    b. A local sounding device in the panel shall be activated.

    c. The 80-character LCD display shall indicate all pertinent information associated with the trouble condition and its location. However, unacknowledged alarm messages shall have priority over trouble messages and if such an alarm must also be displayed the trouble message shall not be displayed on the LCD.

C. Control Switch Operation:

1. Acknowledge (ACK/STEP) Switch:

    a. Activation of the control panel Acknowledge switch in response to a single new trouble or alarm condition shall silence the panel sounding device and change the System Alarm or Trouble LEDs from flashing to steady-ON. If additional new alarm or trouble conditions exist in the system, activation of this switch shall advance the display to the next alarm or trouble condition that exists and shall not silence the local audible device or change the LEDs to steady until all new conditions have been so acknowledged.

    b. New alarm conditions shall always be displayed before new trouble conditions. Occurrence of a new alarm or trouble condition shall cause the panel to resound and the alarm/trouble sequences shall repeat.

2. Signal Silence Switch: Activation of the Signal Silence Switch shall cause all appropriate indicating appliances and relays to return to the normal condition after an alarm condition. The selection of indicating circuits and relays silenced by this switch shall be fully programmable.

3. System Reset Switch:

   a. Activation of the System Reset Switch shall cause all electronically-latched initiating devices or zones, as well as all associated output devices and circuits, to return to the normal condition.

   b. If alarm conditions exist in the system after the System Reset Switch activation, the system shall then resound the alarm conditions.

4. System Test Switch: Activation of the System Test Switch shall initiate an automatic test of all intelligent detectors in the system. Such test shall activate the electronics in each intelligent device, simulating an alarm condition. A report summarizing the results of this test shall be displayed automatically on the front panel.

5. Lamp Test Switch: Activation of the Lamp Test Switch shall turn on all LED indicators, LCD display and local sounder and then return to the previous condition.

1.05 SERVICE AIDS

A. Automatic Detector Test: The system shall include a special Automatic Detector Test which permits a serviceman to test all intelligent detectors from the main control panel.

B. Watch-Dog Timers: The system shall include independent "Watch-Dog" timers to detect and report failure of any microprocessor circuit, memory or software.

1.06 FIELD PROGRAMMING

A. The system shall be programmable, configurable and expandable in the field without the need for special tools or PROM programmers and shall not require replacement of memory ICs. All programming may be accomplished through the standard control panel keyboard or through the use of the optional CRT-1 keyboard. All programs shall be stored in non-volatile memory. The programming function shall be entered with a special password that may be selected when the system is installed. The password may be changed in the field to a new value at any time by entering the old password and requesting a password change. In the event that the programmer may enter a password and then lose or forget it, the system shall be designed such that the password may be determined by special procedures available through the system manufacturer.

1.07 EQUIPMENT MANUFACTURERS

A. All references to manufacturer's or supplier's model numbers and other pertinent information herein is intended to establish minimum standards of performance,

function and quality. Equivalent equipment from other manufacturers may be substituted for that specified providing the submittal is performed as specified above.

B. General Equipment and Material Requirements.

1. All equipment and material shall be new and unused.

2. All components and systems shall be designed for continuous duty without undue heating or degradation of function or performance. All equipment, materials, accessories, devices and other facilities covered by this Specification or noted on contract drawings and installation specifications shall be the best suited for their intended use and shall be provided by a single manufacturer or, if provided by different manufacturers, recognized as compatible by both manufacturers.

PART 2 – PRODUCTS

2.01 FIRE ALARM CONTROL PANEL

A. The control panel shall be housed in a cabinet designed for mounting directly to a wall or vertical surface. The back box and door shall be constructed of 16 gauge steel with provisions for electrical conduit connections into the sides and top. The door shall provide a key lock and shall include a glass or other transparent opening for viewing of all indicators. The cabinet shall be approximately 5.5" inches deep and 14.5" inches wide. Height shall be approximately 16.125".

B. The control unit shall be modular in structure for ease of installation, maintenance and future expansion.

C. The control panel shall provide or be capable of expansion to the following capacities:

1. Total programmable input/output points: 301

2. Intelligent Detectors: 99

3. Addressable monitor/control modules: 99

4. Programmable IAC (bell) circuits in panel: 4

5. Programmable software zones: 99

6. Programmable remote relay/annunciator points: 99

7. LCD annunciators per system: 4

8. ACS annunciators per system: 10

9. Where the system has more devices than indicated in #1 thru 8 above expand the system to provide the capacity for the number of devices for the project.

D. The CPU shall communicate with, monitor and control all other modules in the panel. Removal, disconnection or failure of any control panel module shall be detected and reported by the Central Processing Unit. The CPU shall contain and execute all control-by-event programs for specific action to be taken if a fire situation is detected in the system. Such control-by-event programs shall be held in non-volatile programmable memory and shall not be lost even if system primary

and secondary power failure occurs. The main equipment shall be supplied with a 5 amp power supply.

E. System designs and specifications based on base building standard.

F. Control panel shall have automatic dialer for communications to 24 hour manned facility.

2.02 INTELLIGENT SMOKE DETECTORS

A. The Intelligent Smoke Detectors shall connect with two wires to one of the control panel loops. The detectors shall use the photoelectric principal to measure smoke density and shall, on command from the control panel, send data to the panel representing the analog level of smoke density. The detectors shall be ceiling-mount and shall include a twist-lock base.

B. The detectors shall provide a test means whereby they will simulate an alarm condition and report that condition to the control panel. Such a test may be initiated at the detector itself, by activating a magnetic switch or may be activated remotely on command from the control panel.

C. The detectors shall provide address-setting means on the detector head using rotary decimal switches. The detectors shall also store an internal identifying code which the control panel shall use to identify the type of detector.

D. The detectors shall provide dual alarm and power LEDs. Both LEDs shall flash under normal conditions, indicating that the detector is operational and in regular communication with the control panel. Both LEDs may be placed into steady illumination by the control panel, indicating that an alarm condition has been detected. An output connection shall also be provided into the base to connect an external remote alarm LED. Manufacturer shall be base building standard.

2.03 INTELLIGENT HEAT DETECTORS

A. The Heat Detectors shall be Intelligent and Addressable and shall connect with two wires to the Fire Alarm Control Panel Signaling Line Circuit Loop. The detectors shall contain dual thermistors and be factory preset at 140°F. The detectors shall measure thermal levels caused by a fire and report the analog level of the thermal measurement to the control panel. The detectors shall be ceiling-mount and shall include a twist-lock base. The detectors shall provide a test means whereby they will simulate an alarm condition and report that condition to the control panel. The detectors also provide an alarm signal of high rate of rise factory preset at 15°F, per minute. Such a test may be initiated at the detector itself, by activating a magnetic switch or may be activated remotely on command from the control panel. The detectors shall provide address-setting means on the detector head using rotary decimal switch and shall also store an internal identifying code which the control panel shall use to identify the type of detector. The detectors shall provide dual alarm and power LEDs. Both LEDs shall flash under normal conditions, indicating that the detector is operational and in regular communication with the control panel. Both LEDs may be placed into steady illumination by the control panel, indicating that an alarm condition has been

detected. If required, the flashing mode operation of the detector LEDs shall be controlled through the system field program.

2.04 HIGH AMBIENT HEAT DETECTORS

A. The High Ambient Heat Detectors shall be wired to Intelligent and Addressable monitor modules and shall connect with two wires to the Fire Alarm Control Panel Signaling Line Circuit Loop. The detectors shall contain dual thermistors and be factory preset at 200°F. The detectors shall measure thermal levels caused by a fire and provide an alarm signal to the control panel. The detectors shall be ceiling-mount and shall include a twist-lock base. The detectors shall provide a test means whereby they will simulate an alarm condition and report that condition to the control panel. The detectors also provide an alarm signal of high rate of rise factory preset at 15°F, per minute. Such a test may be initiated at the detector itself, by activating a magnetic switch or may be activated remotely on command from the control panel.

B. The monitor modules shall provide address-setting means on the detector head using rotary decimal switch and shall also store an internal identifying code which the control panel shall use to identify the type of detector. Manufacturer shall be base building standard.

2.05 ADDRESSABLE MANUAL STATIONS

A. The Addressable Manual Station shall connect with two wires to one of the SLC loops. The Manual Station shall, on command from the control panel, send data to the panel representing the state of the manual switch.

B. The Manual Station shall provide address-setting means using rotary decimal switches and shall also store an internal identifying code which the control panel shall use to identify the type of device. An LED shall be provided which shall flash the type of device. An LED shall be provided which shall flash under normal conditions, indicating that the Manual Station is operational and in regular communication with the control panel. The LED may be placed into steady illumination by the control panel, indicating that an alarm condition has been detected. The station shall also be key-resettable. Base building standard.

2.06 ADDRESSABLE MONITOR MODULES

A. The Monitor module shall be used to connect a supervised zone of conventional initiating devices (any n.o. dry contact device, including 4-wire smoke detectors) to one of the SLC loops. The Monitor Module shall mount in a 4-inch square, 2-1/8" deep electrical box. The zone may be wired for Style D or Style B operation.

B. The Monitor module shall provide address-setting means using rotary decimal switches and shall also store an internal identifying code which the control panel shall use to identify the type of device. An LED shall be provided which shall flash under normal conditions, indicating that the Monitor module is operational and in regular communication with the control panel. Manufacturer shall be base building standard.

2.07 ADDRESSABLE ISOLATOR MODULES

A. The Isolator Module may be used to isolate wire-to-wire short circuits on an SLC loop in order to limit the number of other modules or detectors that are incapacitated by the short circuit fault. If a wire-to-wire short occurs, the isolator shall automatically open-circuit the SLC loop. When the short is corrected, the isolators shall automatically re-connect the isolated section of the SLC loop.

B. The isolator module shall not require any address-setting, although each Isolator will electrically reduce the capacity of the loop by two detector or module addresses. The Isolator module will mount in a standard 4-inch deep electrical box. It shall provide a single LED which shall flash to indicate that the Isolator is operational and shall illuminate steadily to indicate that a short has been detected and isolated. Manufacturer shall be base building standard.

2.08 AUDIO/VISUAL DEVICES

A. The horn/strobe shall be UL listed for use with Fire Protective Signaling Systems and accepted by the local Authority Having Jurisdiction (AHJ). Horn/strobe models shall have a minimum sound output of 90 dBA at 10 feet measured in an anechoic chamber with peak meter response. The strobe shall be 15/75 candela and meet or exceed the requirements of the Americans with Disabilities Act (ADA). The device shall be 24 VDC nominally and have an acceptable operating range of 21-30 VDC. It shall flush mount to a single or double gang backbox. Manufacturer shall be base building standard.

B. Strobes shall be base building standard. Strobes in the handicapped accessible bathrooms shall be base building standard.

C. Audio devices shall be field selectable taps for 25 or 70 VRMS operation from 1/8 watt up to 2 watts.

D. Unit audio devices shall produce 520Hz

2.10 OTHER MATERIALS

A. All other materials and accessories, not specifically described or called for, but which are required for a complete and finished installation for the work of this Section shall be furnished and installed by the contractor at no additional cost to the Owner. These materials shall be selected by the contractor, subject to be reviewed by the Architect.

PART 3 – EXECUTION

3.01 INSTALLATION

A. Installation shall be in strict compliance with manufacturer's recommendations by a NICET Level III technician. Consult manufacturer for all wiring diagrams, schematics, sizes, outlets, etc., before installing conduits and pulling wires.

B. Conductors: Provide complete wiring between all equipment as directed my

manufacturer. Wiring splices are to be avoided to the extent possible and Transposing or changing colors will not be permitted. All junction boxes shall be labeled as "Fire Alarm System" with decal or approved markings. Comply with all local, state and national codes.

C. All Equipment shall be held firmly in place. Fastening and supports shall be adequate to support the loads with a safety factor of five.

D. Fire Alarm Control Panel shall be connected to a separate dedicated branch circuit, maximum 20 amperes. Circuit shall be labeled as "FIRE ALARM".

E. All field wiring shall be completely supervised. In the event of a primary power failure, disconnected standby battery, disarrangement of any components or any open circuits in the system; an audible and visual trouble signal will be activated until the system is restored to normal.

F. As indicated on the drawings, each zone shall be labeled within the operational program memory of the Fire Alarm Control Panel. Names of the zones shall be coordinated with the Owner and shall meet with the Owner's approval.

G. Fire Sprinkler System(s) shall each be indicated on a separate zone, if applicable.

3.02 TESTS AND REPORTS

A. The system will be accepted only after a satisfactory test of the entire system has been accomplished by a factory-trained distributor in the presence of a representative of the Authority Having Jurisdiction and the Owner's Representative.

B. Contractor shall provide the on-site services of an authorized technical representative of the manufacturer, to supervise all connections and fully test all devices and components of the system as installed. Owner's representative shall be instructed in the proper use and testing of the system.

3.03 WARRANTY

A. Provide one year warranty on the entire system including on-site labor during normal working hours at no additional cost to the Owner for a period of twelve (12) months from the date of acceptance.

B. Guarantee response to a trouble call within one normal business day after receipt of such call.

3.04 HORN/STROBE UNITS

A. Provide contingency in contract (as separate line item) to provide additional horn/strobe units and strobe only units per Fire Marshal's final inspection. (20 horn/strobe units and 20 strobe only units). At completion of project, credit to owner any unused portion of contingency for horn/strobes not used.

3.05 FINAL

A. Protect finished installation from damage by other trades.

B. Remove rubbish and leftover materials from the site.

END OF SECTION

SECTION 31 2000 - EARTH MOVING

PART 1 - GENERAL

1.1 RELATED DOCUMENTS

A. Drawings and general provisions of the Contract, including General and Supplementary Conditions and Division 01 Specification Sections, apply to this Section.

1.2 SUMMARY

A. Section Includes:

1. Excavating and filling for rough grading the Site.
2. Preparing subgrades for [**slabs-on-grade**] .
3. Excavating and backfilling for buildings and structures.
4. Drainage course for concrete slabs-on-grade.
5. Excavating well hole to accommodate elevator-cylinder assembly.

B. Related Requirements:

1. Section 01 3200 "Construction Progress Documentation" for recording preexcavation and earth-moving progress.
2. Section 31 1000 "Site Clearing" for site stripping, grubbing, stripping and stockpiling topsoil, and removal of above- and below-grade improvements and utilities.

1.3 UNIT PRICES

A. Work of this Section is affected by unit prices for earth moving specified in Section 01 2200 "Unit Prices."

B. Quantity allowances for earth moving are included in Section 01 2100 "Allowances."

C. Rock Measurement: Volume of rock actually removed, measured in original position, but not to exceed the following. Unit prices for rock excavation include replacement with approved materials.

1. 24 inches (600 mm) outside of concrete forms other than at footings.
2. 12 inches (300 mm) outside of concrete forms at footings.
3. 6 inches (150 mm) outside of minimum required dimensions of concrete cast against grade.
4. Outside dimensions of concrete walls indicated to be cast against rock without forms or exterior waterproofing treatments.
5. 6 inches (150 mm) beneath bottom of concrete slabs-on-grade.

1.4 DEFINITIONS

A. Backfill: Soil material or controlled low-strength material used to fill an excavation.

B. Borrow Soil: Satisfactory soil imported from off-site for use as fill or backfill.

C. Drainage Course: Aggregate layer supporting the slab-on-grade that also minimizes upward capillary flow of pore water.

D. Excavation: Removal of material encountered above subgrade elevations and to lines and dimensions indicated.

1. Authorized Additional Excavation: Excavation below subgrade elevations or beyond indicated lines and dimensions as directed by Architect. Authorized additional excavation and replacement material will be paid for according to Contract provisions for unit prices.
2. Bulk Excavation: Excavation more than 10 feet (3 m) in width and more than 30 feet (9 m) in length.
3. Unauthorized Excavation: Excavation below subgrade elevations or beyond indicated lines and dimensions without direction by Architect. Unauthorized excavation, as well as remedial work directed by Architect, shall be without additional compensation.

E. Fill: Soil materials used to raise existing grades.

F. Rock: Rock material in beds, ledges, unstratified masses, conglomerate deposits, and boulders of rock material that exceed 1 cu. yd. (0.76 cu. m) for bulk excavation or 3/4 cu. yd. (0.57 cu. m) for footing, trench, and pit excavation that cannot be removed by rock-excavating equipment equivalent to the following in size and performance ratings, without systematic drilling, ram hammering, ripping, or blasting, when permitted:

1. Equipment for Footing, Trench, and Pit Excavation: Late-model, track-mounted hydraulic excavator; equipped with a 42-inch- (1065-mm-) maximum-width, short-tip-radius rock bucket; rated at not less than 138-hp (103-kW) flywheel power with bucket-curling force of not less than 28,700 lbf (128 kN) and stick-crowd force of not less than 18,400 lbf (82 kN) with extra-long reach boom.
2. Equipment for Bulk Excavation: Late-model, track-mounted loader; rated at not less than 230-hp (172-kW) flywheel power and developing a minimum of 47,992-lbf (213.3-kN) breakout force with a general-purpose bare bucket.

G. Rock: Rock material in beds, ledges, unstratified masses, conglomerate deposits, and boulders of rock material 3/4 cu. yd. (0.57 cu. m) or more in volume that exceed a standard penetration resistance of 100 blows/2 inches (97 blows/50 mm) when tested by a geotechnical testing agency, according to ASTM D1586.

H. Structures: Buildings, footings, foundations, retaining walls, slabs, tanks, curbs, mechanical and electrical appurtenances, or other man-made stationary features constructed above or below the ground surface.

I. Subgrade: Uppermost surface of an excavation or the top surface of a fill or backfill immediately below subbase, drainage fill, drainage course, or topsoil materials.

J. Utilities: On-site underground pipes, conduits, ducts, and cables as well as underground services within buildings.

1.5 PREINSTALLATION MEETINGS

A. Preinstallation Conference: Conduct preexcavation conference at [**Project site**] .

1. Review methods and procedures related to earthmoving, including, but not limited to, the following:
   a. Personnel and equipment needed to make progress and avoid delays.
   b. Coordination of Work with utility locator service.
   c. Coordination of Work and equipment movement with the locations of tree- and plant-protection zones.
   d. Extent of trenching by hand or with air spade.
   e. Field quality control.

1.6 ACTION SUBMITTALS

A. Product Data: For each type of the following manufactured products required:

1. Geotextiles.
2. Controlled low-strength material, including design mixture.
3. Geofoam.
4. Warning tapes.

B. Samples for Verification: For the following products, in sizes indicated below:

1. Geotextile: 12 by 12 inches (300 by 300 mm).
2. Warning Tape: 12 inches (300 mm) long; of each color.

1.7 INFORMATIONAL SUBMITTALS

A. Qualification Data: For qualified testing agency.

B. Material Test Reports: For each on-site and borrow soil material proposed for fill and backfill as follows:

1. Classification according to ASTM D2487.
2. Laboratory compaction curve according to ASTM D698.

C. Seismic survey report from seismic survey agency.

D. Preexcavation Photographs or Videotape: Show existing conditions of adjoining construction and site improvements, including finish surfaces that might be misconstrued as damage caused by earth-moving operations. Submit before earth moving begins.

1.8 QUALITY ASSURANCE

A. Blasting: Comply with applicable requirements in NFPA 495, "Explosive Materials Code," and prepare a blasting plan reporting the following:

1. Types of explosive and sizes of charge to be used in each area of rock removal, types of blasting mats, sequence of blasting operations, and procedures that will prevent damage to site improvements and structures on Project site and adjacent properties.
2. Seismographic monitoring during blasting operations.

B. Seismic Survey Agency: An independent testing agency, acceptable to authorities having jurisdiction, experienced in seismic surveys and blasting procedures to perform the following services:

1. Report types of explosive and sizes of charge to be used in each area of rock removal, types of blasting mats, sequence of blasting operations, and procedures that will prevent damage to site improvements and structures on Project site and adjacent properties.
2. Seismographic monitoring during blasting operations.

C. Geotechnical Testing Agency Qualifications: Qualified according to ASTM E329 and ASTM D3740 for testing indicated.

1.9 FIELD CONDITIONS

A. Traffic: Minimize interference with adjoining roads, streets, walks, and other adjacent occupied or used facilities during earth-moving operations.

1. Do not close or obstruct streets, walks, or other adjacent occupied or used facilities without permission from Owner and authorities having jurisdiction.
2. Provide alternate routes around closed or obstructed traffic ways if required by Owner or authorities having jurisdiction.

B. Improvements on Adjoining Property: Authority for performing earth moving indicated on property adjoining Owner's property will be obtained by Owner before award of Contract.

1. Do not proceed with work on adjoining property until directed by Architect.

C. Utility Locator Service: Notify utility locator service for area where Project is located before beginning earth-moving operations.

D. Do not commence earth-moving operations until temporary site fencing and erosion- and sedimentation-control measures specified in Section 01 5000 "Temporary Facilities and Controls" and Section 31 1000 "Site Clearing" are in place.

E. Do not commence earth-moving operations until plant-protection measures specified in Section 01 5639 "Temporary Tree and Plant Protection" are in place.

F. The following practices are prohibited within protection zones:

1. Storage of construction materials, debris, or excavated material.
2. Parking vehicles or equipment.

3. Foot traffic.
4. Erection of sheds or structures.
5. Impoundment of water.
6. Excavation or other digging unless otherwise indicated.
7. Attachment of signs to or wrapping materials around trees or plants unless otherwise indicated.

G. Do not direct vehicle or equipment exhaust towards protection zones.

H. Prohibit heat sources, flames, ignition sources, and smoking within or near protection zones.

PART 2 - PRODUCTS

2.1 SOIL MATERIALS

A. General: Provide borrow soil materials when sufficient satisfactory soil materials are not available from excavations.

B. Satisfactory Soils: Soil Classification [**Groups GW, GP, GM, SW, SP, and SM according to ASTM D2487**] , or a combination of these groups; free of rock or gravel larger than [**3 inches (75 mm)**] in any dimension, debris, waste, frozen materials, vegetation, and other deleterious matter.

1. Liquid Limit: Refer to Geotechnical Report. .
2. Plasticity Index: Refer to Geotechnical Report .

C. Unsatisfactory Soils: Soil Classification [**Groups GC, SC, CL, ML, OL, CH, MH, OH, and PT according to ASTM D2487**] , or a combination of these groups.

1. Unsatisfactory soils also include satisfactory soils not maintained within 2 percent of optimum moisture content at time of compaction.

D. Subbase Material: Naturally or artificially graded mixture of natural or crushed gravel, crushed stone, and natural or crushed sand; ASTM D2940/D2940M; with at least 90 percent passing a 1-1/2-inch (37.5-mm) sieve and not more than 12 percent passing a No. 200 (0.075-mm) sieve.

E. Base Course: Naturally or artificially graded mixture of natural or crushed gravel, crushed stone, and natural or crushed sand; ASTM D2940/D2940M; with at least 95 percent passing a 1-1/2-inch (37.5-mm) sieve and not more than 8 percent passing a No. 200 (0.075-mm) sieve.

F. Engineered Fill: Naturally or artificially graded mixture of natural or crushed gravel, crushed stone, and natural or crushed sand; ASTM D2940/D2940M; with at least 90 percent passing a 1-1/2-inch (37.5-mm) sieve and not more than 12 percent passing a No. 200 (0.075-mm) sieve.

G. Bedding Course: Naturally or artificially graded mixture of natural or crushed gravel, crushed stone, and natural or crushed sand; ASTM D2940/D2940M; except with 100 percent passing a 1-inch (25-mm) sieve and not more than 8 percent passing a No. 200 (0.075-mm) sieve.

H. Drainage Course: Narrowly graded mixture of [**washed**]crushed stone, or crushed or uncrushed gravel; ASTM D448; coarse-aggregate grading Size 57; with 100 percent passing a 1-1/2-inch (37.5-mm) sieve and zero to 5 percent passing a No. 8 (2.36-mm) sieve.

I. Filter Material: Narrowly graded mixture of natural or crushed gravel, or crushed stone and natural sand; ASTM D448; coarse-aggregate grading Size 67; with 100 percent passing a 1-inch (25-mm) sieve and zero to 5 percent passing a No.

J. Sand: ASTM C33/C33M; fine aggregate.

K. Impervious Fill: Clayey gravel and sand mixture capable of compacting to a dense state.

2.2 ACCESSORIES

A. Warning Tape: Acid- and alkali-resistant, polyethylene film warning tape manufactured for marking and identifying underground utilities, 6 inches (150 mm) wide and 4 mils (0.1 mm) thick, continuously inscribed with a description of the utility; colored as follows:

1. Red: Electric.
2. Yellow: Gas, oil, steam, and dangerous materials.
3. Orange: Telephone and other communications.
4. Blue: Water systems.
5. Green: Sewer systems.

B. Detectable Warning Tape: Acid- and alkali-resistant, polyethylene film warning tape manufactured for marking and identifying underground utilities, a minimum of 6 inches (150 mm) wide and 4 mils (0.1 mm) thick, continuously inscribed with a description of the utility, with metallic core encased in a protective jacket for corrosion protection, detectable by metal detector when tape is buried up to 30 inches (750 mm) deep; colored as follows:

1. Red: Electric.
2. Yellow: Gas, oil, steam, and dangerous materials.
3. Orange: Telephone and other communications.
4. Blue: Water systems.
5. Green: Sewer systems.

PART 3 - EXECUTION

3.1 PREPARATION

A. Protect structures, utilities, sidewalks, pavements, and other facilities from damage caused by settlement, lateral movement, undermining, washout, and other hazards created by earth-moving operations.

B. Protect and maintain erosion and sedimentation controls during earth-moving operations.

C. Protect subgrades and foundation soils from freezing temperatures and frost. Remove temporary protection before placing subsequent materials.

3.2 DEWATERING

A. Provide dewatering system of sufficient scope, size, and capacity to control hydrostatic pressures and to lower, control, remove, and dispose of ground water and permit excavation and construction to proceed on dry, stable subgrades.

B. Prevent surface water and ground water from entering excavations, from ponding on prepared subgrades, and from flooding Project site and surrounding area.

C. Protect subgrades from softening, undermining, washout, and damage by rain or water accumulation.

1. Reroute surface water runoff away from excavated areas. Do not allow water to accumulate in excavations. Do not use excavated trenches as temporary drainage ditches.

D. Dispose of water removed by dewatering in a manner that avoids endangering public health, property, and portions of work under construction or completed. Dispose of water and sediment in a manner that avoids inconvenience to others.

3.3 EXPLOSIVES

A. Explosives: Do not use explosives.

B. Explosives: Obtain written permission from authorities having jurisdiction before bringing explosives to Project site or using explosives on Project site.

1. Perform blasting without damaging adjacent structures, property, or site improvements.
2. Perform blasting without weakening the bearing capacity of rock subgrade and with the least-practicable disturbance to rock to remain.

3.4 EXCAVATION, GENERAL

A. Unclassified Excavation: Excavate to subgrade elevations regardless of the character of surface and subsurface conditions encountered. Unclassified excavated materials may include rock, soil materials, and obstructions. No changes in the Contract Sum or the Contract Time will be authorized for rock excavation or removal of obstructions.

1. If excavated materials intended for fill and backfill include unsatisfactory soil materials and rock, replace with satisfactory soil materials.
2. Remove rock to lines and grades indicated to permit installation of permanent construction without exceeding the following dimensions:
   a. 24 inches (600 mm) outside of concrete forms other than at footings.
   b. 12 inches (300 mm) outside of concrete forms at footings.
   c. 6 inches (150 mm) outside of minimum required dimensions of concrete cast against grade.
   d. Outside dimensions of concrete walls indicated to be cast against rock without forms or exterior waterproofing treatments.
   e. 6 inches (150 mm) beneath bottom of concrete slabs-on-grade.

B. Classified Excavation: Excavate to subgrade elevations. Material to be excavated will be classified as earth and rock. Do not excavate rock until it has been classified and cross sectioned by Architect. The Contract Sum will be adjusted for rock excavation according to unit prices included in the Contract Documents. Changes in the Contract Time may be authorized for rock excavation.

1. Earth excavation includes excavating pavements and obstructions visible on surface; underground structures, utilities, and other items indicated to be removed; and soil, boulders, and other materials not classified as rock or unauthorized excavation.
   a. Intermittent drilling; blasting, if permitted; ram hammering; or ripping of material not classified as rock excavation is earth excavation.
2. Rock excavation includes removal and disposal of rock. Remove rock to lines and subgrade elevations indicated to permit installation of permanent construction without exceeding the following dimensions:
   a. 24 inches (600 mm) outside of concrete forms other than at footings.
   b. 12 inches (300 mm) outside of concrete forms at footings.
   c. 6 inches (150 mm) outside of minimum required dimensions of concrete cast against grade.
   d. Outside dimensions of concrete walls indicated to be cast against rock without forms or exterior waterproofing treatments.
   e. 6 inches (150 mm) beneath bottom of concrete slabs-on-grade.

3.5 EXCAVATION FOR STRUCTURES

A. Excavate to indicated elevations and dimensions within a tolerance of plus or minus 1 inch (25 mm). If applicable, extend excavations a sufficient distance from structures for placing and removing concrete formwork, for installing services and other construction, and for inspections.

1. Excavations for Footings and Foundations: Do not disturb bottom of excavation. Excavate by hand to final grade just before placing concrete reinforcement. Trim bottoms to required lines and grades to leave solid base to receive other work.
2. Pile Foundations: Stop excavations 6 to 12 inches (150 to 300 mm) above bottom of pile cap before piles are placed. After piles have been driven, remove loose and displaced material. Excavate to final grade, leaving solid base to receive concrete pile caps.
3. Excavation for Underground Tanks, Basins, and Mechanical or Electrical Utility Structures: Excavate to elevations and dimensions indicated within a tolerance of plus or minus 1 inch (25 mm). Do not disturb bottom of excavations intended as bearing surfaces.

3.6 SUBGRADE INSPECTION

A. Notify Architect when excavations have reached required subgrade.

B. If Architect determines that unsatisfactory soil is present, continue excavation and replace with compacted backfill or fill material as directed.

C. Proof-roll subgrade below the building slabs with a pneumatic-tired and loaded 10-wheel, tandem-axle dump truck weighing not less than 15 tons (13.6 tonnes) to identify soft pockets and areas of excess yielding.

1. Completely proof-roll subgrade in one direction. Limit vehicle speed to 3 mph (5 km/h).
2. Excavate soft spots, unsatisfactory soils, and areas of excessive pumping or rutting, as determined by Architect, and replace with compacted backfill or fill as directed.

D. Authorized additional excavation and replacement material will be paid for according to Contract provisions for unit prices.

E. Reconstruct subgrades damaged by freezing temperatures, frost, rain, accumulated water, or construction activities, as directed by Architect, without additional compensation.

3.7 UNAUTHORIZED EXCAVATION

A. Fill unauthorized excavation under foundations or wall footings by extending bottom elevation of concrete foundation or footing to excavation bottom, without altering top elevation. Lean concrete fill, with 28-day compressive strength of 2500 psi (17.2 MPa), may be used when approved by Architect.

1. Fill unauthorized excavations under other construction, pipe, or conduit as directed by Architect.

3.8 STORAGE OF SOIL MATERIALS

A. Stockpile borrow soil materials and excavated satisfactory soil materials without intermixing. Place, grade, and shape stockpiles to drain surface water. Cover to prevent windblown dust.

1. Stockpile soil materials away from edge of excavations. Do not store within drip line of remaining trees.

3.9 BACKFILL

A. Place and compact backfill in excavations promptly, but not before completing the following:

1. Construction below finish grade including, where applicable, subdrainage, dampproofing, waterproofing, and perimeter insulation.
2. Surveying locations of underground utilities for Record Documents.
3. Testing and inspecting underground utilities.
4. Removing concrete formwork.
5. Removing trash and debris.
6. Removing temporary shoring, bracing, and sheeting.
7. Installing permanent or temporary horizontal bracing on horizontally supported walls.

B. Place backfill on subgrades free of mud, frost, snow, or ice.

3.10 SOIL FILL

A. Plow, scarify, bench, or break up sloped surfaces steeper than 1 vertical to 4 horizontal so fill material will bond with existing material.

B. Place and compact fill material in layers to required elevations as follows:

1. Under grass and planted areas, use satisfactory soil material.
2. Under walks and pavements, use satisfactory soil material.
3. Under steps and ramps, use engineered fill.
4. Under building slabs, use engineered fill.
5. Under footings and foundations, use engineered fill.

C. Place soil fill on subgrades free of mud, frost, snow, or ice.

3.11 SOIL MOISTURE CONTROL

A. Uniformly moisten or aerate subgrade and each subsequent fill or backfill soil layer before compaction to within 2 percent of optimum moisture content.

1. Do not place backfill or fill soil material on surfaces that are muddy, frozen, or contain frost or ice.
2. Remove and replace, or scarify and air dry, otherwise satisfactory soil material that exceeds optimum moisture content by 2 percent and is too wet to compact to specified dry unit weight.

3.12 COMPACTION OF SOIL BACKFILLS AND FILLS

A. Place backfill and fill soil materials in layers not more than [**8 inches (200 mm)**] in loose depth for material compacted by heavy compaction equipment and not more than 4 inches (100 mm) in loose depth for material compacted by hand-operated tampers.

B. Place backfill and fill soil materials evenly on all sides of structures to required elevations and uniformly along the full length of each structure.

C. Compact soil materials to not less than the following percentages of maximum dry unit weight according to [**ASTM D698**] :

1. Under structures, building slabs, steps, and pavements, scarify and recompact top 12 inches (300 mm) of existing subgrade and each layer of backfill or fill soil material at [**95**] percent.

3.13 SUBSURFACE DRAINAGE

A. Subsurface Drain: Place subsurface drainage geotextile around perimeter of subdrainage trench. Place a 6-inch (150-mm) course of filter material on subsurface drainage geotextile to support subdrainage pipe. Encase subdrainage pipe in a minimum of 12 inches (300 mm) of filter material, placed in compacted layers 6 inches (150 mm) thick, and wrap in subsurface drainage geotextile, overlapping sides and ends at least 6 inches (150 mm).

1. Compact each filter material layer to 85 percent of maximum dry unit weight according to ASTM D698 with a minimum of two passes of a plate-type vibratory compactor.

B. Drainage Backfill: Place and compact filter material over subsurface drain, in width indicated, to within 12 inches (300 mm) of final subgrade, in compacted layers 6 inches (150 mm) thick. Overlay drainage backfill with one layer of subsurface drainage geotextile, overlapping sides and ends at least 6 inches (150 mm).

1. Compact each filter material layer to 85 percent of maximum dry unit weight according to ASTM D698 with a minimum of two passes of a plate-type vibratory compactor.
2. Place and compact impervious fill over drainage backfill in 6-inch- (150-mm-) thick compacted layers to final subgrade.

3.14 DRAINAGE COURSE UNDER CONCRETE SLABS-ON-GRADE

A. Place drainage course on subgrades free of mud, frost, snow, or ice.

B. On prepared subgrade, place and compact drainage course under cast-in-place concrete slabs-on-grade as follows:

1. Install subdrainage geotextile on prepared subgrade according to manufacturer's written instructions, overlapping sides and ends.
2. Place drainage course 6 inches (150 mm) or less in compacted thickness in a single layer.
3. Place drainage course that exceeds 6 inches (150 mm) in compacted thickness in layers of equal thickness, with no compacted layer more than 6 inches (150 mm) thick or less than 3 inches (75 mm) thick.
4. Compact each layer of drainage course to required cross sections and thicknesses to not less than 95 percent of maximum dry unit weight according to ASTM D698.

3.15 FIELD QUALITY CONTROL

A. Special Inspections: Owner will engage a qualified special inspector to perform inspections:

1. Determine prior to placement of fill that site has been prepared in compliance with requirements.
2. Determine that fill material classification and maximum lift thickness comply with requirements.
3. Determine, during placement and compaction, that in-place density of compacted fill complies with requirements.

B. Testing Agency: Owner will engage a qualified geotechnical engineering testing agency to perform tests and inspections.

C. Allow testing agency to inspect and test subgrades and each fill or backfill layer. Proceed with subsequent earth moving only after test results for previously completed work comply with requirements.

D. Footing Subgrade: At footing subgrades, at least one test of each soil stratum will be performed to verify design bearing capacities. Subsequent verification and approval of other footing subgrades may be based on a visual comparison of subgrade with tested subgrade when approved by Architect.

E. Testing agency will test compaction of soils in place according to ASTM D1556, ASTM D2167, ASTM D2937, and ASTM D6938, as applicable. Tests will be performed at the following locations and frequencies:

1. Paved and Building Slab Areas: At subgrade and at each compacted fill and backfill layer, at least one test for every 2000 sq. ft. (186 sq. m) or less of paved area or building slab but in no case fewer than three tests.
2. Foundation Wall Backfill: At each compacted backfill layer, at least one test for every 100 feet (30 m) or less of wall length but no fewer than two tests.

F. When testing agency reports that subgrades, fills, or backfills have not achieved degree of compaction specified, scarify and moisten or aerate, or remove and replace soil materials to depth required; recompact and retest until specified compaction is obtained.

3.16 PROTECTION

A. Protecting Graded Areas: Protect newly graded areas from traffic, freezing, and erosion. Keep free of trash and debris.

B. Repair and reestablish grades to specified tolerances where completed or partially completed surfaces become eroded, rutted, settled, or where they lose compaction due to subsequent construction operations or weather conditions.

1. Scarify or remove and replace soil material to depth as directed by Architect; reshape and recompact.

C. Where settling occurs before Project correction period elapses, remove finished surfacing, backfill with additional soil material, compact, and reconstruct surfacing.

1. Restore appearance, quality, and condition of finished surfacing to match adjacent work, and eliminate evidence of restoration to greatest extent possible.

3.17 DISPOSAL OF SURPLUS AND WASTE MATERIALS

A. Remove surplus satisfactory soil and waste materials, including unsatisfactory soil, trash, and debris, and legally dispose of them off Owner's property.

B. Transport surplus satisfactory soil to designated storage areas on Owner's property. Stockpile or spread soil as directed by Architect.

1. Remove waste materials, including unsatisfactory soil, trash, and debris, and legally dispose of them off Owner's property.

END OF SECTION 31 2000

SECTION 31 3116 - TERMITE CONTROL

PART 1 - GENERAL

1.1 SUMMARY

A. Section Includes:

1. Soil treatment with termiticide.
2. Bait-station system.

1.2 ACTION SUBMITTALS

A. Product Data: For each type of product. Include the EPA-Registered Label for termiticide products.

1.3 INFORMATIONAL SUBMITTALS

A. Product certificates.

B. Soil Treatment Application Report: Include the following:

1. Date and time of application.
2. Moisture content of soil before application.
3. Termiticide brand name and manufacturer.
4. Quantity of undiluted termiticide used.
5. Dilutions, methods, volumes used, and rates of application.
6. Areas of application.
7. Water source for application.

C. Bait-Station System Installation Report: Include the following:

1. Location of areas and sites conducive to termite feeding and activity.
2. Plan drawing showing number and locations of bait stations.
3. Dated report for each monitoring and inspection occurrence, indicating level of termite activity, procedure, and treatment applied before time of Substantial Completion.
4. Termiticide brand name and manufacturer.
5. Quantities of [**termiticide**] [**and**] [**nontoxic termite bait**] used.
6. Schedule of inspections for one year from date of Substantial Completion.

D. Sample Warranties: For special warranties.

1.4 QUALITY ASSURANCE

A. Installer Qualifications: A specialist who is licensed according to regulations of authorities having jurisdiction to apply termite control treatment and products in jurisdiction where Project

is located and who employs workers trained and approved by manufacturer to install manufacturer's products.

B. Regulatory Requirements: Formulate and apply termiticides and termiticide devices according to the EPA-Registered Label.

C. Preinstallation Conference: Conduct conference at Project site.

1.5 PROJECT CONDITIONS

A. Environmental Limitations: To ensure penetration, do not treat soil that is water saturated or frozen. Do not treat soil while precipitation is occurring. Comply with requirements of the EPA-Registered Label and requirements of authorities having jurisdiction.

B. Coordinate soil treatment application with excavating, filling, grading, and concreting operations. Treat soil under footings, grade beams, and ground-supported slabs before construction.

1.6 WARRANTY

A. Soil Treatment Special Warranty: Manufacturer's standard form, signed by Applicator and Contractor, certifying that termite control work consisting of applied soil termiticide treatment will prevent infestation of subterranean termites . If subterranean termite activity or damage is discovered during warranty period, re-treat soil and repair or replace damage caused by termite infestation.

1. Warranty Period: [**Five**] years from date of Substantial Completion.

1.7 MAINTENANCE SERVICE

A. Continuing Service: Beginning at Substantial Completion, provide 12 months continuing service including monitoring, inspection, and re-treatment for occurrences of termite activity. Provide a standard continuing service agreement. State services, obligations, conditions, terms for agreement period, and terms for future renewal options.

PART 2 - PRODUCTS

2.1 SOIL TREATMENT

A. Termiticide: Provide an EPA-Registered termiticide, complying with requirements of authorities having jurisdiction, in an aqueous solution formulated to prevent termite infestation. Provide quantity required for application at the label volume and rate for the maximum termiticide concentration allowed for each specific use, according to product's EPA-Registered Label.

1. Products: Subject to compliance with requirements, available products that may be incorporated into the Work include, but are not limited to, the following:

a. BASF Corporation, Agricultural Products; Termidor.
b. Bayer Environmental Science; Premise 75.
c. FMC Corporation, Agricultural Products Group; [Dragnet FT] [Talstar] [Prevail].
d. Syngenta; [Demon TC] [Prelude] [Probuild TC].

2. Service Life of Treatment: Soil treatment termiticide that is effective for not less than five years against infestation of subterranean termites

PART 3 - EXECUTION

3.1 APPLICATION, GENERAL

A. General: Comply with the most stringent requirements of authorities having jurisdiction and with manufacturer's EPA-Registered Label for products.

3.2 APPLYING SOIL TREATMENT

A. Examine substrates, areas, and conditions, with Applicator present, for compliance with requirements for interfaces with earthwork, slab and foundation work, landscaping, utility installation, and other conditions affecting performance of termite control.

B. Proceed with application only after unsatisfactory conditions have been corrected.

C. Soil Treatment Preparation: Remove foreign matter and impermeable soil materials that could decrease treatment effectiveness on areas to be treated. Loosen, rake, and level soil to be treated except previously compacted areas under slabs and footings. Termiticides may be applied before placing compacted fill under slabs if recommended in writing by termiticide manufacturer.

1. Fit filling hose connected to water source at the site with a backflow preventer, complying with requirements of authorities having jurisdiction.

D. Application: Mix soil treatment termiticide solution to a uniform consistency. Provide quantity required for application at the label volume and rate for the maximum specified concentration of termiticide, according to manufacturer's EPA-Registered Label, to the following so that a continuous horizontal and vertical termiticidal barrier or treated zone is established around and under building construction. Distribute treatment evenly.

1. Slabs-on-Grade and Basement Slabs: Under ground-supported slab construction, including footings, building slabs, and attached slabs as an overall treatment. Treat soil materials before concrete footings and slabs are placed.
2. Foundations: Adjacent soil, including soil along the entire inside perimeter of foundation walls; along both sides of interior partition walls; around plumbing pipes and electric conduit penetrating the slab; around interior column footers, piers, and chimney bases; and along the entire outside perimeter, from grade to bottom of footing. Avoid soil washout around footings.
3. Crawlspaces: Soil under and adjacent to foundations as previously indicated. Treat adjacent areas including around entrance platform, porches, and equipment bases. Apply

overall treatment only where attached concrete platform and porches are on fill or ground.

4. Masonry: Treat voids.
5. Penetrations: At expansion joints, control joints, and areas where slabs will be penetrated.

E. Avoid disturbance of treated soil after application. Keep off treated areas until completely dry.

F. Protect termiticide solution, dispersed in treated soils and fills, from being diluted until ground-supported slabs are installed. Use waterproof barrier according to EPA-Registered Label instructions.

G. Post warning signs in areas of application.

H. Reapply soil treatment solution to areas disturbed by subsequent excavation, grading, landscaping, or other construction activities following application.

3.3 INSTALLING BAIT-STATION SYSTEM

A. Place bait stations according to product's EPA-Registered Label and manufacturer's written instructions, in the following locations that are conducive to termite feeding and activity:

1. Conducive sites and locations indicated on Drawings.
2. In and around infested trees and stumps.
3. In mulch beds.
4. Where wood directly contacts soil.
5. Areas of high soil moisture.
6. Near irrigation sprinkler heads.
7. Each area where roof drainage system, including downspouts and scuppers, drains to soil.
8. Along driplines of roof overhangs without gutters.
9. Where condensate lines from mechanical equipment drip or drain to soil.
10. At plumbing penetrations through ground-supported slabs.
11. Other sites and locations as determined by licensed Installer.

B. Inspect and service bait stations from time of their application until Substantial Completion, according to the EPA-Registered Label for product and manufacturer's written instructions for termite management system and bait products.

1. Service Frequency: Inspect bait stations not less than once every three month(s).

END OF SECTION 31 3116

Harrisonburg Office
1356 N. Main Street
Harrisonburg, VA 22802
Phone: 540-434-0400
Fax: 540-434-0447

Viola Engineering, PC

Winchester Office
220 Imboden Drive, Suite A
Winchester, VA 22603
Phone: 540-313-4270
Fax: 540-434-0447

November 17, 2025

Dylan Fox, Analyst
Plus Management
13271 Rivers Bend Blvd
Chester, VA 23836
work: dfox@plusmgt.com
work: 804-229-8788

RE: Final Report of Geotechnical Site Investigation
Daleville Town Center Apartments Phase III
Tax Map: 88(10)2, Broad Street, Daleville, VA 24083
VEPC Project No.: PTL-253441

Mr. Fox:

This report contains the results of our geotechnical investigation and engineering recommendations for the proposed construction of the Daleville Town Center Phase III apartment complex located on Broad Street in Daleville, Virginia (Tax Map: 88(10)2). Alterations made from the preliminary report issued on November 12, 2025, are denoted in grey. A lower-than-anticipated CBR design value of 3.3 was obtained from laboratory testing; as such, we have lowered the recommended design modulus of subgrade reaction (k) to 150 pci. We conducted five (5) test borings as indicated on the attached Test Boring Location Plan. Borings were drilled utilizing hollow-stem augers to a termination depth of 22 feet. Test borings were staked by our office utilizing real-time kinematic (RTK) GPS equipment, using a fix solution status (±14 mm +1 ppm).

SITE AND PROJECT DESCRIPTION

The parcel has an approximate area of 2.2 acres, primarily covered by grass. The site generally slopes to the south, with an elevation difference of approximately 10 feet, ranging from 1,350 to 1,360 feet. A review of historical satellite imagery indicates that the parcel and the surrounding area underwent mass grading activities sometime between 2006 and 2008. Site grading plans were not available at the time of this writing; however, we infer that cut and fill depths of 15 feet may have been required to achieve the existing grade across the town center complex.

Figure 1. Site Photograph - Southeast Corner Facing North

Plans for Phase III of this project have been provided, which include architectural drawings prepared by Poole & Poole Architecture, LLC with structural plans developed by Cates Engineering Ltd. (dated: 09/25/2025). This phase will include the construction of two (2) buildings generally located along the

western and eastern property lines with parking provided throughout. The western building, Building 2, will have a first-floor area of 10,933 ft², while the eastern building, Building 1, will have a first-floor area of 15,551 ft². Both buildings will have three (3) levels and will consist of timber frame construction founded on shallow spread footings. Foundation designs currently incorporate isolated and continuous footing widths of roughly two (2) feet. Geotechnical information provided by Cates Engineering indicates maximum wall service loads of 3 kips per linear foot (klf) and a maximum column service load of 15 kips. Final site grading plans have not been prepared as of this writing; however, we expect minimal cut and fill will be required to develop final grades.

SITE EXPLORATION

Viola Engineering, PC drilled a total of five (5) test borings to the prescribed termination depths. Soil test borings were performed in accordance with generally accepted geotechnical engineering practices, using an ATV-mounted CME 55 rotary drill rig equipped with an automatic hammer. Borings were placed within the planned building footprints as approved by the design engineer of record.

In brief, hollow-stem augers were advanced to sample intervals, and representative soil samples were recovered with a standard split-spoon sampler (1⅜-inch ID x 2-inch OD) following ASTM D1586, the Standard Penetration Test. The standard dictates that a 140-pound weight is dropped freely from a height of 30 inches to drive the split-spoon sampler into the soil. The number of blows required to drive the split-spoon sampler through three (3) consecutive 6-inch increments was recorded, and the blows of the last two (2) increments were summed to obtain the Standard Penetration Resistance (N-value). No subsurface water levels were encountered in any of the bores during the drilling process.

The N-value provides a general indication of in-situ soil conditions and has been correlated with specific engineering properties of soils. An automatic hammer was utilized to perform the Standard Penetration Test (SPT) on this project. Research indicates that the Standard Penetration Resistance (N-value) determined by an automatic hammer differs from the N-value determined by the safety hammer method, referred to as the N_{60} value or corrected value, which accounts for the energy loss in the safety hammer method. The correction is made using the following equation:

$$\boldsymbol{N_{60} = N_{field} \times CE}$$

The $\boldsymbol{N_{field}}$ value is recorded in the field, and CE is the drill rod energy ratio of the hammer utilized in the field. The recommended correction factor ***(CE)*** of 1.4 is typically used to convert N_{field} values to N_{60} values, as per established guidelines. The N-values reported on the Boring Logs and included in this report are the corrected values $\boldsymbol{(N_{60})}$. It is recommended that corrected $\boldsymbol{N_{60}}$ values be used for engineering analysis.

PUBLISHED SITE INFORMATION AND SUBSURFACE CONDITIONS

The site is located in the Valley and Ridge Province of the Appalachian Highlands physiographic region. According to **The USGS State Geologic Map Compilation (SGMC, 2017)**, the site is underlain by the Waynesboro Formation (CAwb;0) geologic unit. This formation dates from the Cambrian period and is primarily comprised of dolostone (sedimentary, carbonate) and limestone with minor inclusion of shale.

Nominal topsoil depths were observed to be three (3) inches across the site. The overburden soils are generally described as orange-brown to tan high plasticity clay with sand (CH). Fill soils were characterized in all test borings with depths ranging from 2.75 to 11.75 feet. Fill was found to exhibit stiff to very stiff soil consistency. Fill soils can be difficult to identify but generally demonstrate consistent sample discontinuities, differing composition, or divergent shear strength characteristics from adjacent soil strata. It is believed that fill was well compacted based on field conditions observed. Fill is underlain by residual fat clay (CH) of similar makeup. See the attached sample photo log for further information.

Soil moisture content testing was conducted on 35 jar samples. Moisture contents ranged from 9.0 to 50.0 percent with average and median values of 28.7 and 27.0 percent, respectively. Soil moisture generally increases with depth in this geologic setting; conversely, standard penetration values decrease with depth. Bedrock is estimated to be near drilling termination depths, as high moisture contents were observed at these elevations. Atterburg limit testing indicates the site soils exhibit a liquid limit and plasticity index of 61 and 40, respectively. Standard proctor testing conducted according to Virginia Test Methods (VTM-1) yielded a maximum dry density and optimum moisture of 103.0 pcf at 20.5 percent moisture. *A soaked California Bearing Ratio (CBR) value of 5.0 was obtained at 0.1 inches of penetration.* ***High plasticity clay of this type is typically found in this region and poses a low to moderate shrink-swell risk.***

Groundwater was not encountered during our exploration at any of the boreholes. Hard bedrock conditions were not encountered within any of the test boring locations. We conclude that extensive rock removal will not be required for planned earthwork and can be performed using conventional excavation equipment.

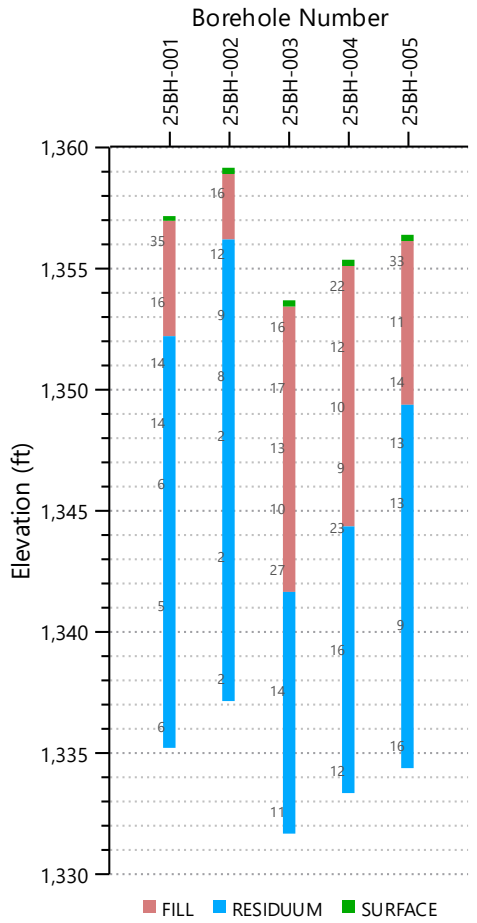

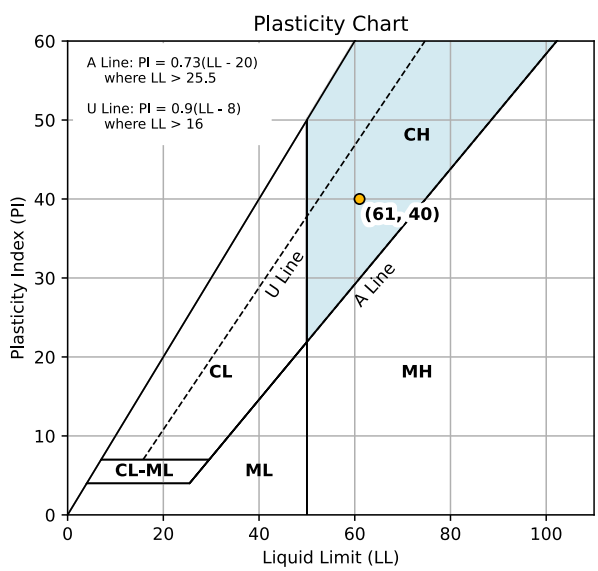

Figure 2. Borehole Cross Section and Atterberg Limit Rest Results (CH)

SUBGRADE PREPARATION AND EARTHWORK OPERATIONS

Subgrade preparation should consist of stripping all vegetation, rootmat, topsoil, pavement and any other soft or unsuitable material within the work area. Demolition of any existing structures and pavement section should include complete removal of foundation systems and buried appurtenances unless it is found to not impact the planned construction. After stripping to the desired grade and before fill placement, the stripped surface should be observed by the Geotechnical Engineer of Record or his authorized representative. Any soft or unsuitable materials encountered during the removal of the existing surface should be removed and replaced with an approved backfill compacted to the criteria provided below.

Soils placed as engineered fill shall be an approved material, free of excessive organic matter or debris, non-frost susceptible, have a maximum liquid limit of 65 percent, and be placed in lifts not exceeding eight (8) inches in loose thickness. Site soils are generally suitable for fill operations and shall have a maximum particle size of three (3) inches and sufficient fines to minimize void spaces. Further, fill placed in trenches shall have a maximum particle size of two (2) inches. The fill shall be moisture conditioned to within ±3 percent of the optimum moisture content. We recommend that each lift be compacted to a minimum of 95% of the maximum dry density obtained per ASTM D-698 (or VTM-1), Standard Proctor Method. Fill with excessive +3/4inch material or wet site soils will require methodical placement and observation of compaction effort to determine adequacy for structural support. All areas receiving fill should be graded to facilitate positive drainage to prevent the ponding of water. The upper six (6) inches of pavement subgrade shall be compacted to 100% of the maximum dry density following the latest Virginia DOT Specifications.

Unacceptable fill materials include topsoil, organic materials (OH, OL), construction debris, large rock and high plasticity silts (MH). High-plasticity material may be employed if approved by the Geotechnical Engineer of Record (GER). All such materials removed during grading operations should be either stockpiled for later use in landscaped areas or placed in approved disposal areas either on-site or off-site. Fill materials shall not be placed on frozen subsoil. All frozen soils should be removed prior to the continuation of fill operations. Further, borrow fill shall not contain frozen materials at the time of placement. All frost-heaved soils should be removed before placement of fill, stone, concrete or asphalt.

All fill operations and subgrade preparation should be observed on a full-time basis, in accordance with Chapter 17 of the Virginia Construction Code by an authorized representative of the Geotechnical Engineer to determine that compaction requirements are being met. A statement of compliance shall be prepared by a professional engineer licensed in the state of Virginia, indicating that all fill placed meets the requirements of applicable standards, the Virginia Construction Code, and this geotechnical report.

All trench excavations shall be benched according to OSHA regulations to permit safe entry. Trench shoring for utility installation shall be designed by the Site Contractor's engineer utilizing OSHA Type C soil requirements for short-term durations. Where portable compaction equipment is used, such as utility trenches, the loose lift thickness should not exceed six (6) inches to achieve the required degree of compaction without delay. The site contractor should be mindful of the moisture sensitivity and surface shearing characteristics of the site soils and expect that earthwork and open at-grade subgrade preparation could be more problematic than typical. Where construction traffic or weather has disturbed the subgrade, the upper eight (8) inches of soil intended for structural support should be scarified and re-compacted. All trench work shall be performed in accordance with current OSHA Safety Regulations. Stormwater

conveyance pipes shall be installed in accordance with VDOT standard drawing PB-1, which is included in the appendix. Bedding material for culvert foundations shall be VDOT 21A, conforming to the requirements of Section 205 of the 2016 VDOT Road and Bridge Specifications. Class I backfill material shall be aggregate base material size VDOT 21A or flowable fill. Regular backfill material outside the neat lines of the Class I areas shown on the Standard PB-1 drawings shall be regular excavation. Rock more than two (2) inches in its greatest dimension shall not be placed within 12 inches of the pipe.

FOUNDATIONS AND SEISMIC CLASS

Based on the planned site development, we conclude that the proposed structures can be supported on shallow foundations. Foundations will generally bear on residual site soils or structural fill. We recommend that all exterior footings bear a minimum of 24 inches below the finish exterior grade to provide adequate frost protection according to Botetourt County Climatic Design Criteria (see appendix).

A net allowable soil-bearing pressure of 2,000 psf should be utilized for final foundation design. The net allowable soil-bearing pressure refers to the pressure that may be transmitted to the foundation-bearing soils in excess of the final minimum surrounding overburden pressure. To prevent punching shear failure, foundations shall be proportioned with a minimum width of two (2) feet. The bearing capacity at the foundation elevation should be verified and documented by the building official during construction. ***Total foundation settlement is expected to be less than 0.75 inches, with differential settlement less than 0.5 inches, based on a width of 50 feet. We are unaware of service limit problems associated with the settlement of previously constructed apartment phases. We do not anticipate the need for deep foundation construction at this time. Shrink-swell of underlying soils is expected to be low and within tolerable limits. Adequate site drainage shall be provided to prevent ponding of water near the structures.***

We have estimated the soil profile type for seismic design based on the soil types encountered at this site. It is our opinion that the site is classified as **Site Class D** based on the site class determination in the 2021 Virginia Construction Code, Section 1613.3.2 and according to the generalized soil profile on the site. Mapped spectral response accelerations were found to be **S_s: 0.21 and S_1:0.067** according to the included ASCE Hazard Report in the appendix. This assumes a risk category of II based on ASCE 7-22.

SLAB CONSTRUCTION

We suggest that slab-on-grade construction be underlain by a minimum of four (4) inches of open-graded aggregate material comparable to VDOT #57 to provide uniform slab bearing conditions. A 10-mil vapor barrier conforming to ASTM E 1745 Class A should be placed underneath concrete to be covered by tile, wood, carpet, impermeable floor coatings, and/or if other moisture-sensitive equipment or materials will be in contact with the floor. The use of vapor retarders may result in excessive curling of floor slabs during curing. We refer the floor slab designer to the latest revision of ACI 302.1R for acceptable methods to minimize concrete shrinkage and curling. We estimate that a design modulus of subgrade reaction (k) of 150 pci is achievable when site soils are present at subgrade compacted to 95% of maximum dry density (ASTM D698 or VTM 1).

RETAINING WALLS

We submit the tabulated coefficients and unit weight of site soils herein for design consideration. We will update these parameters based on the type of fill utilized onsite, as may be required for pertinent structural support for this project. In general, we recommend that the interior below-grade walls be backfilled with an open-graded stone comparable to VDOT No. 57 or equivalent to negate possible settlement at the edges of slabs. Clean open-graded gravel used for backfilling walls, trenches, and excavations shall be placed in lifts not to exceed 18 inches and consolidated with a vibratory plate tamper. Foundation drains shall be installed according to the current Virginia Building Code. The excavation shall be backfilled with clean material placed in uniform loose lifts not to exceed eight (8) inches and compacted to grade in accordance with current Code requirements. **A nonwoven geotextile shall be placed between the interface of all open-graded stone and fine-grained soils that may be exposed to water.**

Heavy compaction equipment (large wedge foot rollers) should not be used within a 1H:2V distance from the toe of the wall to prevent damage to the wall system. Typical design values for site soils consisting of clay have been tabulated. The coefficient of friction between concrete and soil was obtained from the AASHTO LRFD Bridge Specification Table 3.11.5.3-1. Please see the tabulated values as follows:

Table 1. Design Soil Coefficients and Unit Weight

Design Parameter	Equivalent Fluid Pressures	Rankine Earth Pressure Coefficients
Site Soils (Effective Friction Angle= 28°)		
At-Rest	66 pcf	0.531
Active Fluid Pressure	45 pcf	0.361
Passive Fluid Pressure	346 pcf	2.770
Total Unit Weight of Soil	125 pcf	
Friction Coefficient	0.25	
Open Graded Stone VDOT #57 (Effective Friction Angle= 35°)		
At-Rest	49 pcf	0.426
Active Fluid Pressure	32 pcf	0.271
Passive Fluid Pressure	424 pcf	3.690
Total Unit Weight of Soil	115 pcf	
Friction Coefficient	0.34	
Recommended Retaining Wall Design Criteria		
Vertical Load Applied to Walls		50%
Passive Pressure Applied to Resist Sliding		50%
Bearing Capacity Factor of Safety (FS)		3.0
Sliding Factor of Safety (FS)		1.5
Overturning Factor of Safety (FS)		2.0

ROADWAYS AND PARKING PAVEMENT RECOMMENDATIONS

Where standing water develops, softening of the subgrade and other problems related to pumping and loss of subgrade support can be expected. Therefore, good drainage should be maintained to minimize water softening of the subgrade. To shed water, road surfaces should be properly crowned with a minimum 3% slope. As necessary, culverts should also be placed across any natural drainage features intersected by the road alignment. At a minimum, we recommend that all heavily traveled roads and other surfaces be finished with a minimum of 8 inches of No. 21-A stone, placed and compacted to 95 percent of the corrected dry density as determined by ASTM D-698. ***We recommend that pavement sections be developed based on a design California Bearing Ratio (CBR) of 3.3, which is two-thirds of the laboratory-soaked CBR value (5.0).***

LIMITATIONS

This report has been prepared to aid in the evaluation of this site's suitability for the planned construction. Our scope is limited to the specific project and location described, and the project description represents our understanding of the significant aspects relevant to soil and foundation characteristics. Subsurface conditions may vary from those encountered at the test boring locations. The boring logs are intended to represent only the conditions at the test boring locations where the sampling occurred. Classifications of the recovered soil samples are based on recognized standards.

The interpretations and recommendations in this report are based solely on the information available at the time this report was prepared. If the location or design of the structure is altered, the conclusions and recommendations presented herein should not be considered valid unless we have been given the opportunity to review the changes. **We highly recommend that Viola Engineering, PC be contracted as GER to provide construction monitoring services for site grading to adequately enforce and/or confirm that geotechnical requirements are achieved. The recommendations contained herein provide no warranty if our firm is not contracted to provide site monitoring and testing during site development. As such, we suggest that construction monitoring and testing to establish finish grades should not be included in competitive bidding for Special Inspection Services required by Chapter 17 of the Virginia Construction Code.**

If you have any questions regarding the information and recommendations presented herein, or if we can be of further assistance, please do not hesitate to contact us.

Respectfully,

Timothy P. Viola, P.E. (VA)
Project Engineer
tim@violaengineering.com

COMMONWEALTH OF VIRGINIA
11/17/2025
TIMOTHY P. VIOLA
Lic. No. 0402056657
PROFESSIONAL ENGINEER

APPENDIX

Site Maps

Test Boring Logs

Laboratory Test Results

Virginia DOT Standard Drawings

Field Sample Photographs

Botetourt County Climatic Design Criteria & ASCE Hazard Report

Geotechnical Design Requirements

VIOLA ENGINEERING, PC

Site Maps

VIOLA ENGINEERING, PC

VIOLA ENGINEERING, PC

Geotechnical • Geophysical • Construction • Materials

Winchester Office:
220 Imboden Drive, Suite A
Winchester, VA 22603
Phone: 540-313-4270
Fax: 540-434-0447

Harrisonburg Office:
1356 North Main Street
Harrisonburg, VA 22802
Phone: 540-434-0400
Fax: 540-434-0447

Test Boring Location Plan
Plus Management - Daleville Phase III

Location Link: https://www.google.com/maps/search/?api=1&query=37.4172175,-79.9145774
Project Locality: Botetourt County, Virginia

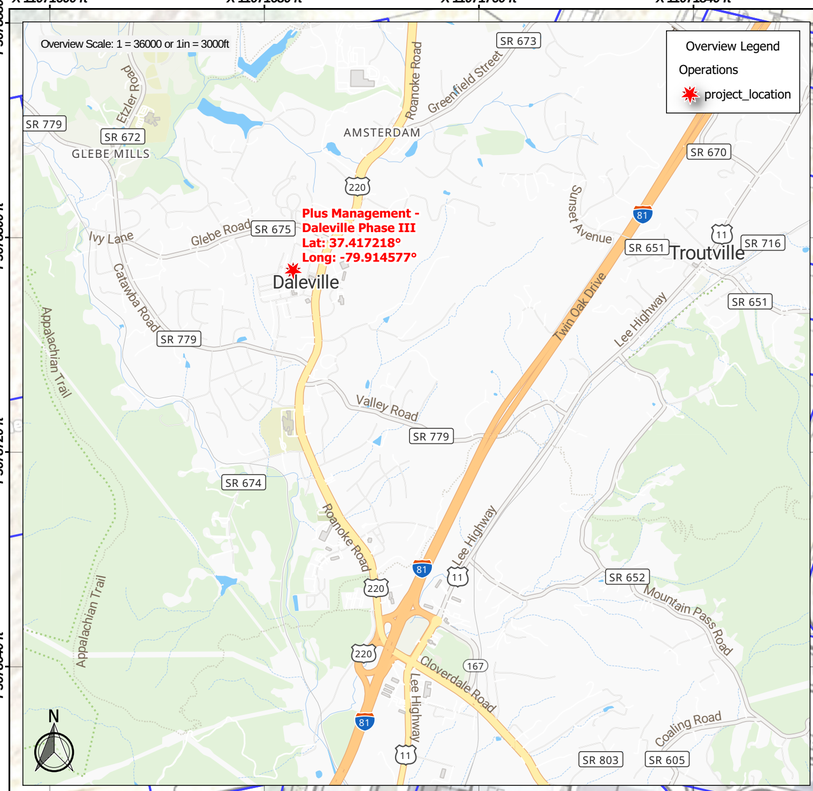

Name	Date (iso)	Easting (ft)	Northing (ft)	Longitude (deg)	Latitude (deg)	Elevation (ft)	Refusal Depth (ft)	Refusal Elevation (ft)	Hole Depth (ft)	Bottom Elevation (ft)	Description
25BH-001	2025-11-06	11072023.63	3678515.17	-79.91490728	37.41713731	1357.16	--	--	22.00	1335.16	Building West
25BH-002	2025-11-06	11072052.80	3678638.05	-79.91481320	37.41747596	1359.14	--	--	22.00	1337.14	Building West
25BH-003	2025-11-06	11072161.06	3678428.32	-79.91442964	37.41690445	1353.63	--	--	22.00	1331.63	Building East
25BH-004	2025-11-06	11072189.16	3678546.95	-79.91433901	37.41723139	1355.33	--	--	22.00	1333.33	Building East
25BH-005	2025-11-06	11072217.19	3678665.07	-79.91424859	37.41755691	1356.36	--	--	22.00	1334.36	Building East
Minimum	***2025-11-06***	***11072023.63***	***3678428.32***	***-79.91490728***	***37.41690445***	***1353.63***	***--***	***--***	***22.00***	***1331.63***	***--***
Average	***--***	***11072128.77***	***3678558.71***	***-79.91454754***	***37.41726120***	***1356.32***	***--***	***--***	***22.00***	***1334.32***	***--***
Maximum	***2025-11-06***	***11072217.19***	***3678665.07***	***-79.91424859***	***37.41755691***	***1359.14***	***--***	***--***	***22.00***	***1337.14***	***--***
Total/Count	***1***	***--***	***--***	***--***	***--***	***5***	***0***	***0***	***110.00***	***5***	***--***

sgmc_desc

The site is located in the Valley And Ridge Province of the Appalachian Highlands physiographic region. According to The USGS State Geologic Map Compilation (SGMC, 2017), the site is underlain by the Waynesboro Formation (CAwb;0) geologic unit. This formation dates from the Cambrian period and is primarily comprised of dolostone (sedimentary, carbonate) and limestone with minor inclusion of shale.

ID	Exploration Type
1	Auger Probe (AP)
2	Test Pit (TP)
3	Borehole (BH)
4	Core Sample (C)

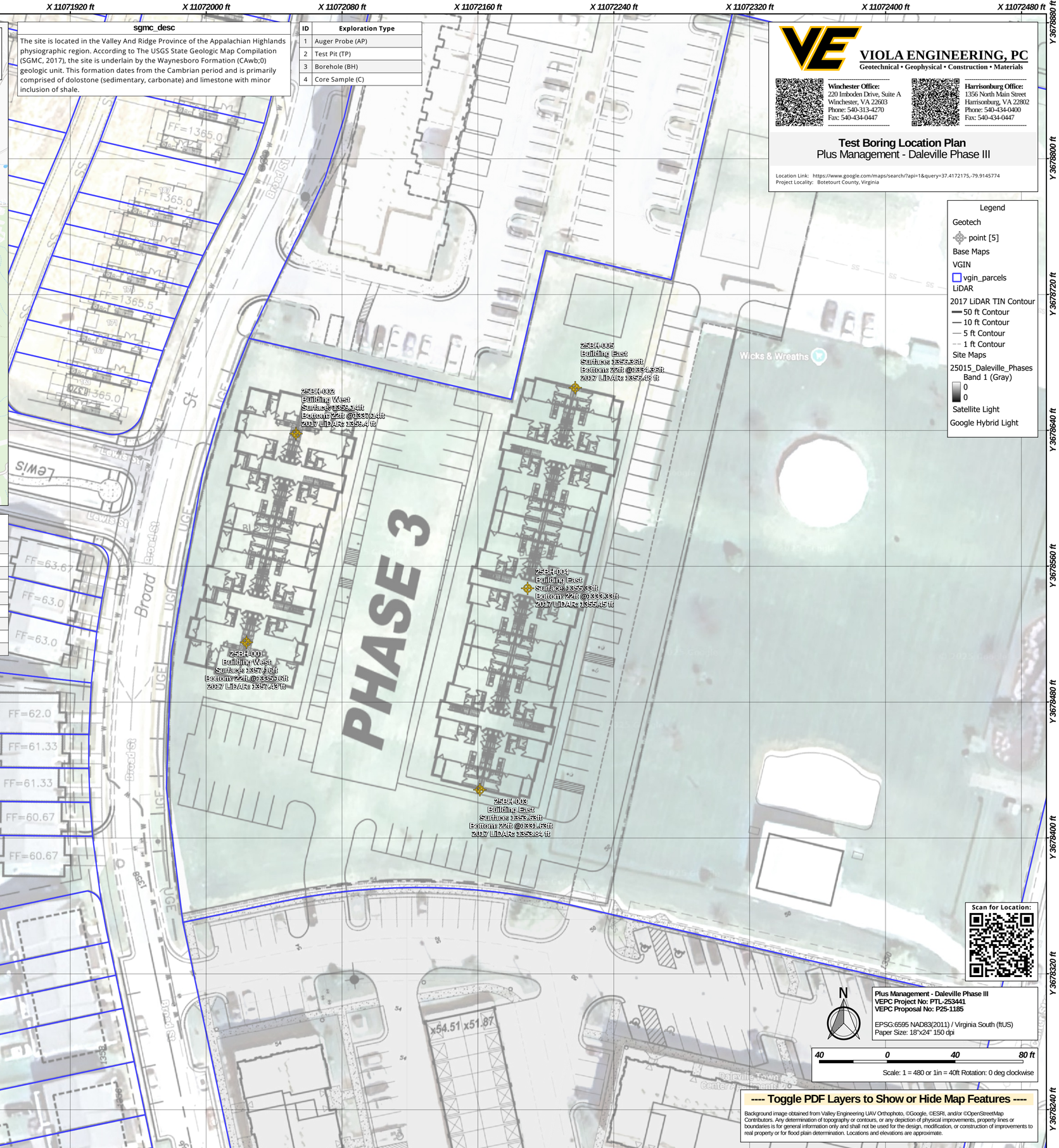

Legend

- Geotech
  - point [5]
- Base Maps
- VGIN
  - vgin_parcels
- LiDAR
- 2017 LiDAR TIN Contour
  - 50 ft Contour
  - 10 ft Contour
  - 5 ft Contour
  - 1 ft Contour
- Site Maps
- 25015_Daleville_Phases
  - Band 1 (Gray)
  - 0
  - 0
- Satellite Light
- Google Hybrid Light

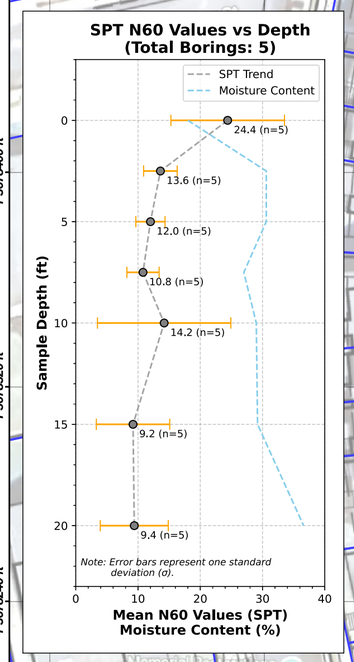

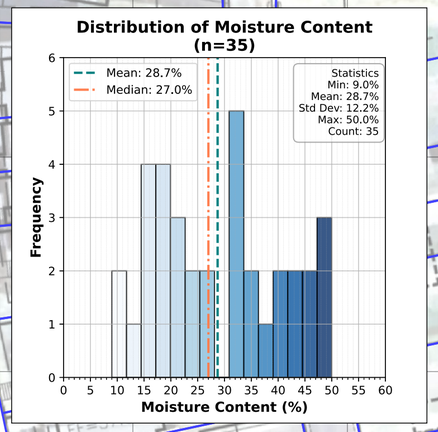

Scan for Location:

Plus Management - Daleville Phase III
VEPC Project No: PTL-253441
VEPC Proposal No: P25-1185

EPSG:6595 NAD83(2011) / Virginia South (ftUS)
Paper Size: 18"X24" 150 dpi

40 0 40 80 ft

Scale: 1 = 480 or 1in = 40ft Rotation: 0 deg clockwise

---- Toggle PDF Layers to Show or Hide Map Features ----

Background image obtained from Valley Engineering UAV Orthophoto, ©Google, ©ESRI, and/or ©OpenStreetMap Contributors. Any determination of topography or contours, or any depiction of physical improvements, property lines or boundaries is for general information only and shall not be used for the design, modification, or construction of improvements to real property or for flood plain determination. Locations and elevations are approximate.

X -8900000 m | X -8896000 m | X -8892000 m

Y 4504000 m | Y 4500000 m | Y 4496000 m | Y 4492000 m

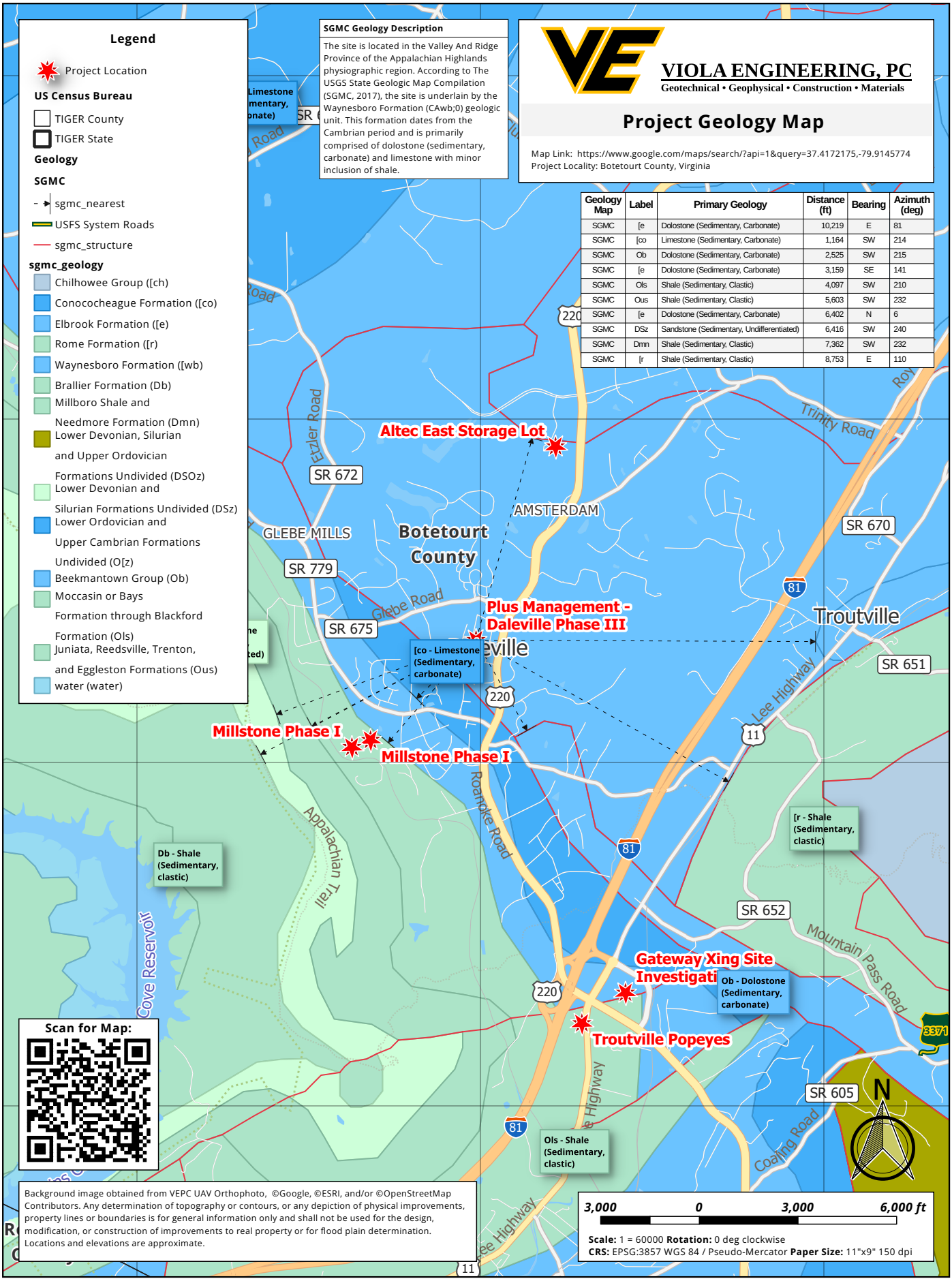

Legend

- Project Location

US Census Bureau

- TIGER County
- TIGER State

Geology

SGMC

- sgmc_nearest
- USFS System Roads
- sgmc_structure

sgmc_geology

- Chilhowee Group ([ch)
- Conococheague Formation ([co)
- Elbrook Formation ([e)
- Rome Formation ([r)
- Waynesboro Formation ([wb)
- Brallier Formation (Db)
- Millboro Shale and Needmore Formation (Dmn)
- Lower Devonian, Silurian and Upper Ordovician Formations Undivided (DSOz)
- Lower Devonian and Silurian Formations Undivided (DSz)
- Lower Ordovician and Upper Cambrian Formations Undivided (O[z)
- Beekmantown Group (Ob)
- Moccasin or Bays Formation through Blackford Formation (Ols)
- Juniata, Reedsville, Trenton, and Eggleston Formations (Ous)
- water (water)

SGMC Geology Description

The site is located in the Valley And Ridge Province of the Appalachian Highlands physiographic region. According to The USGS State Geologic Map Compilation (SGMC, 2017), the site is underlain by the Waynesboro Formation (CAwb;0) geologic unit. This formation dates from the Cambrian period and is primarily comprised of dolostone (sedimentary, carbonate) and limestone with minor inclusion of shale.

VIOLA ENGINEERING, PC

Geotechnical • Geophysical • Construction • Materials

Project Geology Map

Map Link: https://www.google.com/maps/search/?api=1&query=37.4172175,-79.9145774
Project Locality: Botetourt County, Virginia

Geology Map	Label	Primary Geology	Distance (ft)	Bearing	Azimuth (deg)
SGMC	[e	Dolostone (Sedimentary, Carbonate)	10,219	E	81
SGMC	[co	Limestone (Sedimentary, Carbonate)	1,164	SW	214
SGMC	Ob	Dolostone (Sedimentary, Carbonate)	2,525	SW	215
SGMC	[e	Dolostone (Sedimentary, Carbonate)	3,159	SE	141
SGMC	Ols	Shale (Sedimentary, Clastic)	4,097	SW	210
SGMC	Ous	Shale (Sedimentary, Clastic)	5,603	SW	232
SGMC	[e	Dolostone (Sedimentary, Carbonate)	6,402	N	6
SGMC	DSz	Sandstone (Sedimentary, Undifferentiated)	6,416	SW	240
SGMC	Dmn	Shale (Sedimentary, Clastic)	7,362	SW	232
SGMC	[r	Shale (Sedimentary, Clastic)	8,753	E	110

Scan for Map:

Background image obtained from VEPC UAV Orthophoto, ©Google, ©ESRI, and/or ©OpenStreetMap Contributors. Any determination of topography or contours, or any depiction of physical improvements, property lines or boundaries is for general information only and shall not be used for the design, modification, or construction of improvements to real property or for flood plain determination. Locations and elevations are approximate.

3,000 0 3,000 6,000 ft

Scale: 1 = 60000 **Rotation:** 0 deg clockwise
CRS: EPSG:3857 WGS 84 / Pseudo-Mercator **Paper Size:** 11"x9" 150 dpi

X -8900000 m | X -8896000 m | X -8892000 m

X -8896200 m X -8896000 m X -8895800 m

Y 4497800 m
Y 4497600 m
Y 4497400 m
Y 4497200 m
Y 4497000 m

Background image obtained from VEPC UAV Orthophoto, ©Google, ©ESRI, and/or ©OpenStreetMap Contributors. Any determination of topography or contours, or any depiction of physical improvements, property lines or boundaries is for general information only and shall not be used for the design, modification, or construction of improvements to real property or for flood plain determination. Locations and elevations are approximate.

X -8896200 m X -8896000 m X -8895800 m

Test Boring Logs

VIOLA ENGINEERING, PC

VIOLA ENGINEERING, PC

Geotechnical • Geophysical • Construction • Materials

REFERENCE NOTES FOR BORING LOGS

Correlation of SPT Values to Soil Properties

Coarse Grained Soils

N_{60} (bpf)	Relative Density
0 to 3	**Very Loose**
4 to 9	**Loose**
10 to 29	**Medium Dense**
30 to 50	**Dense**
Over 50	**Very Dense**

Fine Grained Soils

N_{60} (bpf)	Consistency	Unconfined Compressive Strength (tsf)
0 to 1	**Very Soft**	<0.25
2 to 4	**Soft**	0.25 to 0.5
5 to 8	**Firm**	0.5 to 1.0
9 to 15	**Stiff**	1.0 to 2.0
16 to 30	**Very Stiff**	2.0 to 4.0
31 to 60	**Hard**	>4.0
Over 60	**Very Hard**	

Note: When SPT values of more than 60 are obtained for material which has retained the mineralogy and the structure of parent rock, the stratum is termed "weathered rock".

Particle Size Identification

Boulders	12 inches or greater
Cobbles	3 inches to 12 inches
Gravel:	
Coarse	3/4 inch to 3 inches
Fine	#4 sieve to 3/4 inch
Sand:	
Coarse	#10 sieve to #4 sieve
Medium	#40 sieve to #10 sieve
Fine	#200 sieve to #40 sieve
Fines	Passing #200 sieve

Proportion Identification

Trace	1 to 5%
Few	5 to 15%
Little	15 to 29%
Some	30 to 49%
Mostly	50 to 100%

Rock Quality Designation

RQD	Quality Classification
<25%	**Very Poor**
25-50%	**Poor**
50-75%	**Fair**
75-90%	**Good**
>90%	**Excellent**

Other Terminology Used on Boring Logs

MC	Moisture content (%)
LL	Liquid limit (%)
PI	Plasticity index (%)
P.P.	Pocket penetrometer
DCP	Dynamic cone penetrometer (15 lb. weight, 20" free fall)

Note : Unified Soil Classification Symbols (USCS) in parentheses indicate field classification based on ASTM D 2488.

CLIENT: Dylan Fox, Plus Management	PROJECT: Plus Management - Daleville Phase III	BOREHOLE NO.: **25BH-001**
DRILL. CONTRACTOR: VEPC	START DATE: 2025-11-06	PROJECT NO.: PTL-253441
DRILL/METHOD: CME 55/Borehole (BH) 2-1/4" HSA	LOCATION: CRS:EPSG 6595, N:3678515.17, E:11072023.63	ELEVATION: 1357.16 (ft)

SAMPLE TYPE: ☒ SPT

BACKFILL TYPE: ▨ DRILL CUTTINGS

NOTES: Building West

DEPTH (ft)	SAMPLE TYPE	SAMPLE NUMBER	SPT N60	RECOVERY (in)	COMMENTS	USC	SOIL DESCRIPTION	ELEVATION (ft)
0						OL	**SURFACE** 1357.16ft Topsoil thickness: 3.0in	1357
		1	35	23.0 (96%)	0.0 ft N60: (7, 12, 23, 28)		**FILL** 1356.91ft Fill, orange to brown, FAT CLAY WITH GRAVEL, very stiff to hard, moist (CH) thickness: 4.75ft	
3		2	16	23.0 (96%)	2.5 ft N60: (5, 7, 9, 12)	CH		1354
6		3	14	24.0 (100%)	5.0 ft N60: (4, 5, 9, 12)		**RESIDUUM** 1352.16ft Residuum, orange to tan, FAT CLAY WITH SAND, firm to stiff, moist (CH) thickness: 17.0ft	1351
		4	14	24.0 (100%)	7.5 ft N60: (2, 5, 9, 9)			
9								1348
		5	6	24.0 (100%)	10.0 ft N60: (2, 2, 4, 4)			
12						CH		1345
15		6	5	24.0 (100%)	15.0 ft N60: (2, 1, 4, 2)			1342
18								1339
21		7	6	24.0 (100%)	20.0 ft N60: (2, 2, 4, 5)			1336
							1335.16ft Hole terminated @22.0ft	

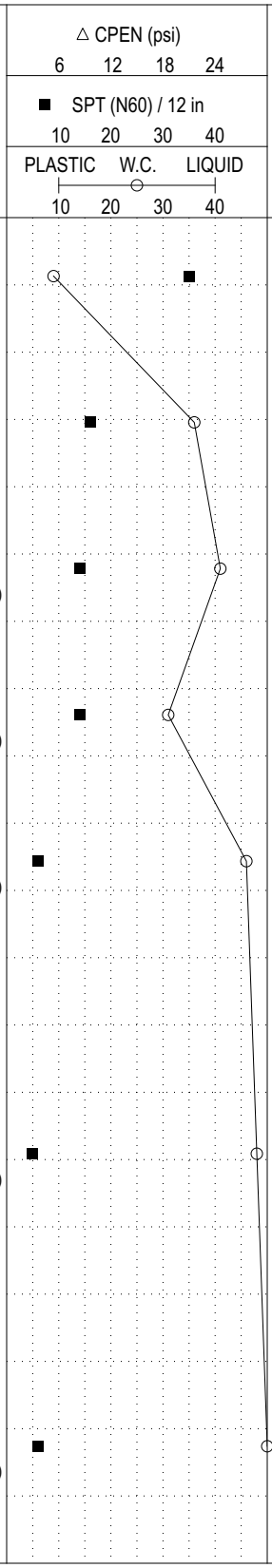

CASING AND BACKFILL

SOIL SYMBOL

VIOLA ENGINEERING, PC Geotechnical • Geophysical • Construction • Materials Harrisonburg 540-434-0400 / Winchester 540-313-4270	LOGGED BY: Jared Green, PM	COMPLETION DEPTH: 22.0 ft
	PREPARED BY: Timothy Viola, PE (VA)	COMPLETION DATE: 2025-11-06
	REVIEWED BY: Timothy Viola, PE (VA)	PAGE: 1 OF 1

C:/Users/TimViola/Viola Engineering/ViolaEng - Documents/PROJECTS/HARRISONBURG/2025/PTL-253441 GEO - Daleville Phase III/PTL-253441/data.sqlite 2025-11-17, 15:12 Viola_Template

CLIENT: Dylan Fox, Plus Management	PROJECT: Plus Management - Daleville Phase III	BOREHOLE NO.: **25BH-002**
DRILL. CONTRACTOR: VEPC	START DATE: 2025-11-06	PROJECT NO.: PTL-253441
DRILL/METHOD: CME 55/Borehole (BH) 2-1/4" HSA	LOCATION: CRS:EPSG 6595, N:3678638.05, E:11072052.8	ELEVATION: 1359.14 (ft)

SAMPLE TYPE: ☒ SPT

BACKFILL TYPE: ▨ DRILL CUTTINGS

NOTES: Building West

DEPTH (ft)	SAMPLE TYPE	SAMPLE NUMBER	SPT N60	RECOVERY (in)	COMMENTS	USC	SOIL DESCRIPTION	ELEVATION (ft)
0		1	16	21.0 (88%)	0.0 ft N60: (4, 5, 11, 14)	OL	**SURFACE** 1359.14ft Topsoil thickness: 3.0in	1359
						CH	**FILL** 1358.89ft Fill, orange-orange to brown-tan, FAT CLAY WITH SAND, very stiff, moist (CH) thickness: 2.75ft	
3		2	12	24.0 (100%)	2.5 ft N60: (4, 5, 7, 8)		**RESIDUUM** 1356.14ft Residuum, orange to tan, FAT CLAY, soft to stiff, moist (CH) thickness: 19.0ft	1356
6		3	9	24.0 (100%)	5.0 ft N60: (4, 4, 5, 8)			1353
		4	8	24.0 (100%)	7.5 ft N60: (2, 4, 4, 5)			
9								1350
		5	2	17.0 (71%)	10.0 ft N60: (2, 1, 1, 2)			
12						CH		1347
15		6	2	24.0 (100%)	15.0 ft N60: (2, 1, 1, 2)			1344
18								1341
21		7	2	24.0 (100%)	20.0 ft N60: (0, 1, 1, 2)		1337.14ft Hole terminated @22.0ft	1338

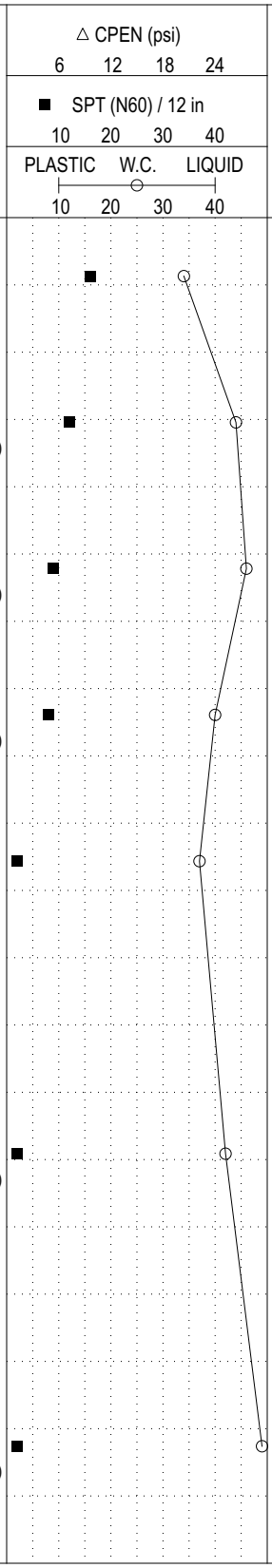

CASING AND BACKFILL

SOIL SYMBOL

VIOLA ENGINEERING, PC — Geotechnical • Geophysical • Construction • Materials — Harrisonburg 540-434-0400 / Winchester 540-313-4270	LOGGED BY: Jared Green, PM	COMPLETION DEPTH: 22.0 ft
	PREPARED BY: Timothy Viola, PE (VA)	COMPLETION DATE: 2025-11-06
	REVIEWED BY: Timothy Viola, PE (VA)	PAGE: 1 OF 1

C:/Users/TimViola/Viola Engineering/ViolaEng - Documents/PROJECTS/HARRISONBURG/2025/PTL-253441 GEO - Daleville Phase III/PTL-253441/data.sqlite 2025-11-17, 15:12 Viola_Template

CLIENT: Dylan Fox, Plus Management	PROJECT: Plus Management - Daleville Phase III	BOREHOLE NO.: **25BH-003**
DRILL. CONTRACTOR: VEPC	START DATE: 2025-11-06	PROJECT NO.: PTL-253441
DRILL/METHOD: CME 55/Borehole (BH) 2-1/4" HSA	LOCATION: CRS:EPSG 6595, N:3678428.32, E:11072161.06	ELEVATION: 1353.63 (ft)

SAMPLE TYPE: ☒ SPT

BACKFILL TYPE: ▨ DRILL CUTTINGS

NOTES: Building East

DEPTH (ft)	SAMPLE TYPE	SAMPLE NUMBER	SPT N60	RECOVERY (in)	COMMENTS	USC	SOIL DESCRIPTION	ELEVATION (ft)
0		1	16	19.0 (79%)	0.0 ft N60: (4, 7, 9, 8)	OL	**SURFACE** 1353.63ft Topsoil thickness: 3.0in	1353
3		2	17	21.0 (88%)	2.5 ft N60: (5, 8, 9, 9)		**FILL** 1353.38ft Fill, orange to tan, FAT CLAY WITH SAND, pockets of gravel, stiff to very stiff, moist (CH) thickness: 11.75ft	1350
6		3	13	24.0 (100%)	5.0 ft N60: (4, 5, 8, 9)	CH		1347
9		4	10	24.0 (100%)	7.5 ft N60: (4, 5, 5, 8)			1344
12		5	27	24.0 (100%)	10.0 ft N60: (7, 12, 15, 15)		**RESIDUUM** 1341.63ft Residuum, orange to tan, FAT CLAY, stiff, moist (CH) thickness: 10.0ft	1341
15		6	14	23.0 (96%)	15.0 ft N60: (9, 7, 7, 8)	CH		1338
18								1335
21		7	11	24.0 (100%)	20.0 ft N60: (4, 4, 7, 7)		1331.63ft Hole terminated @22.0ft	1332

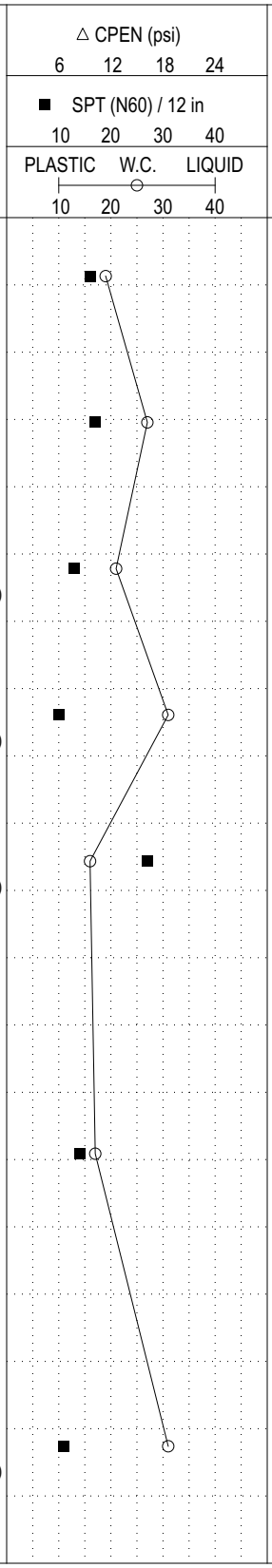

CASING AND BACKFILL

LOGGED BY: Jared Green, PM	COMPLETION DEPTH: 22.0 ft	
PREPARED BY: Timothy Viola, PE (VA)	COMPLETION DATE: 2025-11-06	
REVIEWED BY: Timothy Viola, PE (VA)	PAGE: 1 OF 1	

VIOLA ENGINEERING, PC
Geotechnical • Geophysical • Construction • Materials
Harrisonburg 540-434-0400 | Winchester 540-313-4270

C:/Users/TimViola/Viola Engineering/ViolaEng - Documents/PROJECTS/HARRISONBURG/2025/PTL-253441 GEO - Daleville Phase III/PTL-253441/data.sqlite 2025-11-17, 15:12 Viola_Template

CLIENT: Dylan Fox, Plus Management	PROJECT: Plus Management - Daleville Phase III	BOREHOLE NO.: **25BH-004**
DRILL. CONTRACTOR: VEPC	START DATE: 2025-11-06	PROJECT NO.: PTL-253441
DRILL/METHOD: CME 55/Borehole (BH) 2-1/4" HSA	LOCATION: CRS:EPSG 6595, N:3678546.95, E:11072189.16	ELEVATION: 1355.33 (ft)

SAMPLE TYPE: ☒ SPT

BACKFILL TYPE: ▨ DRILL CUTTINGS

NOTES: Building East

DEPTH (ft)	SAMPLE TYPE	SAMPLE NUMBER	SPT N60	RECOVERY (in)	COMMENTS	USC	SOIL DESCRIPTION	ELEVATION (ft)
0						OL	**SURFACE** 1355.33ft Topsoil thickness: 3.0in	1355
		1	22	21.0 (88%)	0.0 ft N60: (5, 11, 11, 9)		**FILL** 1355.08ft Fill, orange to tan, FAT CLAY WITH SAND, pockets of gravel, stiff to very stiff, moist (CH) thickness: 10.75ft	
3		2	12	20.0 (83%)	2.5 ft N60: (4, 8, 4, 5)			1352
6		3	10	24.0 (100%)	5.0 ft N60: (4, 5, 5, 8)	CH		1349
		4	9	21.0 (88%)	7.5 ft N60: (2, 4, 5, 11)			
9								1346
		5	23	24.0 (100%)	10.0 ft N60: (5, 5, 18, 11)		**RESIDUUM** 1344.33ft Residuum, orange to tan, FAT CLAY, stiff to very stiff, moist (CH) thickness: 11.0ft	
12								1343
15		6	16	24.0 (100%)	15.0 ft N60: (7, 8, 8, 9)	CH		1340
18								1337
21		7	12	24.0 (100%)	20.0 ft N60: (4, 5, 7, 4)		1333.33ft Hole terminated @22.0ft	1334

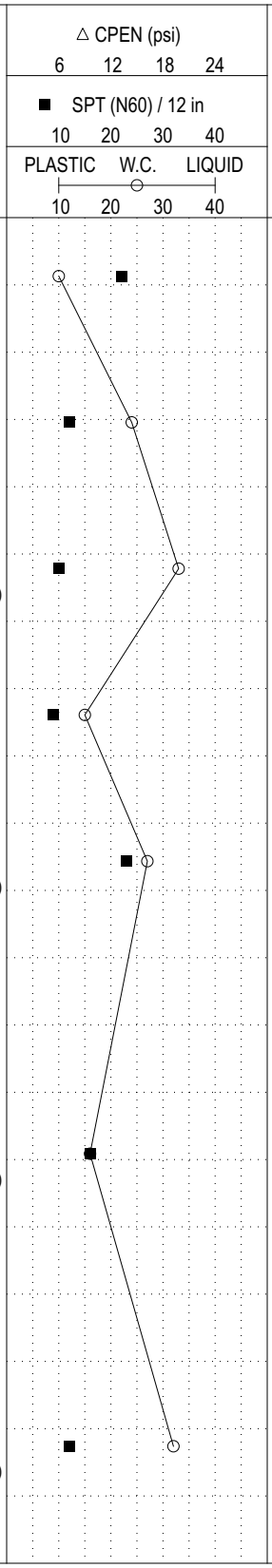

CASING AND BACKFILL

LOGGED BY: Jared Green, PM	COMPLETION DEPTH: 22.0 ft
PREPARED BY: Timothy Viola, PE (VA)	COMPLETION DATE: 2025-11-06
REVIEWED BY: Timothy Viola, PE (VA)	PAGE: 1 OF 1

VIOLA ENGINEERING, PC
Geotechnical • Geophysical • Construction • Materials
Harrisonburg 540-434-0400
Winchester 540-313-4270

C:/Users/TimViola/Viola Engineering/ViolaEng - Documents/PROJECTS/HARRISONBURG/2025/PTL-253441 GEO - Daleville Phase III/PTL-253441/data.sqlite 2025-11-17, 15:12 Viola_Template

CLIENT: Dylan Fox, Plus Management	PROJECT: Plus Management - Daleville Phase III	BOREHOLE NO.: **25BH-005**
DRILL. CONTRACTOR: VEPC	START DATE: 2025-11-06	PROJECT NO.: PTL-253441
DRILL/METHOD: CME 55/Borehole (BH) 2-1/4" HSA	LOCATION: CRS:EPSG 6595, N:3678665.07, E:11072217.19	ELEVATION: 1356.36 (ft)

SAMPLE TYPE: ☒ SPT

BACKFILL TYPE: ▨ DRILL CUTTINGS

NOTES: Building East

DEPTH (ft)	SAMPLE TYPE	SAMPLE NUMBER	SPT N60	RECOVERY (in)	COMMENTS	USC	SOIL DESCRIPTION	ELEVATION (ft)
0		1	33	9.0 (38%)	0.0 ft N60: (12, 18, 15, 14)	OL	**SURFACE** 1356.36ft Topsoil thickness: 3.0in	1356
							FILL 1356.11ft Fill, orange to tan, FAT CLAY WITH SAND, pockets of gravel, stiff to hard, moist (CH) thickness: 6.75ft	
3		2	11	24.0 (100%)	2.5 ft N60: (5, 4, 7, 8)	CH	1355.86ft Rock plug @ 0.5ft @0.5ft	1353
6		3	14	17.0 (71%)	5.0 ft N60: (4, 5, 9, 11)			1350
							RESIDUUM 1349.36ft Residuum, brown to orange, FAT CLAY, stiff to very stiff, moist (CH) thickness: 15.0ft	
9		4	13	24.0 (100%)	7.5 ft N60: (4, 5, 8, 9)			1347
12		5	13	24.0 (100%)	10.0 ft N60: (4, 5, 8, 8)			1344
15		6	9	24.0 (100%)	15.0 ft N60: (2, 4, 5, 7)	CH		1341
18								1338
21		7	16	24.0 (100%)	20.0 ft N60: (5, 5, 11, 12)			1335
							1334.36ft Hole terminated @22.0ft	

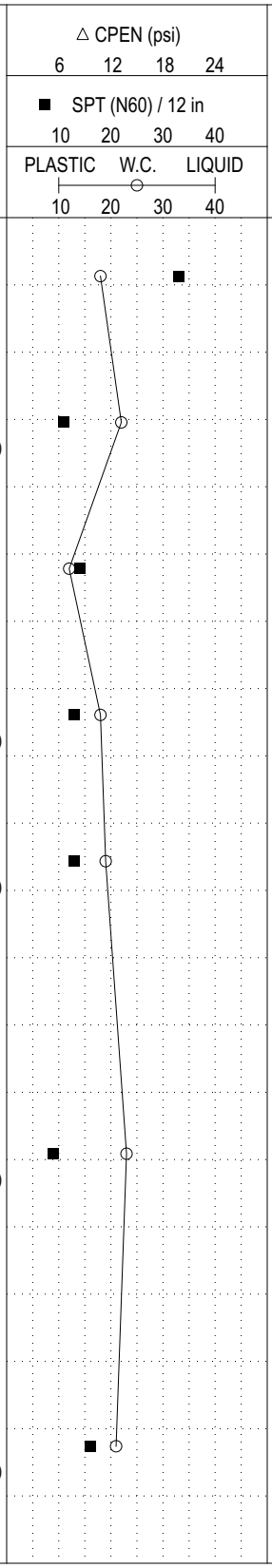

CASING AND BACKFILL

SOIL SYMBOL

VIOLA ENGINEERING, PC — Geotechnical • Geophysical • Construction • Materials — Harrisonburg 540-434-0400 / Winchester 540-313-4270	LOGGED BY: Jared Green, PM	COMPLETION DEPTH: 22.0 ft
	PREPARED BY: Timothy Viola, PE (VA)	COMPLETION DATE: 2025-11-06
	REVIEWED BY: Timothy Viola, PE (VA)	PAGE: 1 OF 1

C:/Users/TimViola/Viola Engineering/ViolaEng - Documents/PROJECTS/HARRISONBURG/2025/PTL-253441 GEO - Daleville Phase III/PTL-253441/data.sqlite 2025-11-17, 15:12 Viola_Template

Laboratory Test Results

VIOLA ENGINEERING, PC

Soil Classification

VIOLA ENGINEERING, PC
Geotechnical • Geophysical • Construction • Materials
P.O. Box 575 Broadway, Virginia 22815
(540) 434-0400 fax: (540) 434-0447

Project:	Daleville Phase III
Project Number:	253441
Date Performed:	11/13/2025

Sample Description:	**25CBR-001** :	Orange-Brown Fat Clay with Sand	
Sample Location:	Combined Sample from Boreholes 1, 2, 4, & 5 at 0-5ft Depth		
Date Received:	11/6/2025	As Received Moisture Content (%):	NA

USCS Classification:	**CH**	AASHTO Classification:	**A-7-6**	Group Index:	**34.47**

Gradation Info

% passing			
		%Gravel	4.4
#4	95.6	% Sand	13.5
#10	93.0	% Silt/Clay	82.1
#40	88.3	C_c	
#200	82.1	C_u	

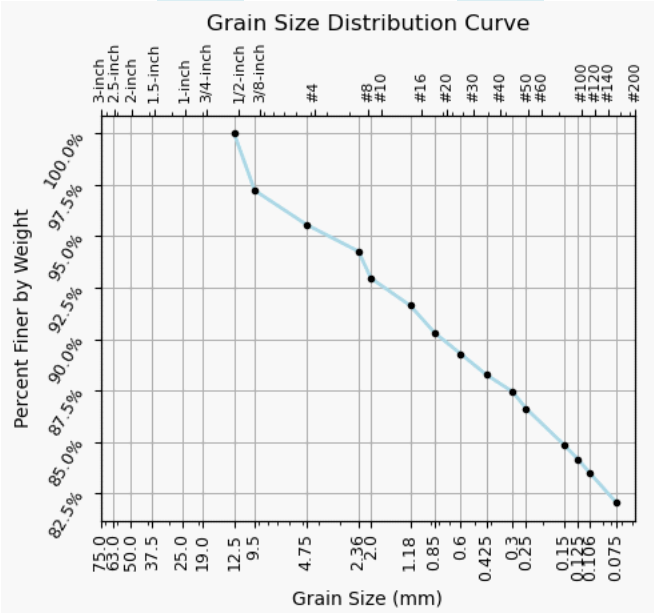

performance of wash dependent on apparent plasticity and gradation of material; sieve selection based on specification or engineer judgement; for well graded samples, -#4 material is often split for use on smaller sieves

Plasticity of -#40 Material

Liquid Limit	61
Plastic Limit	21
Plasticity Index	40

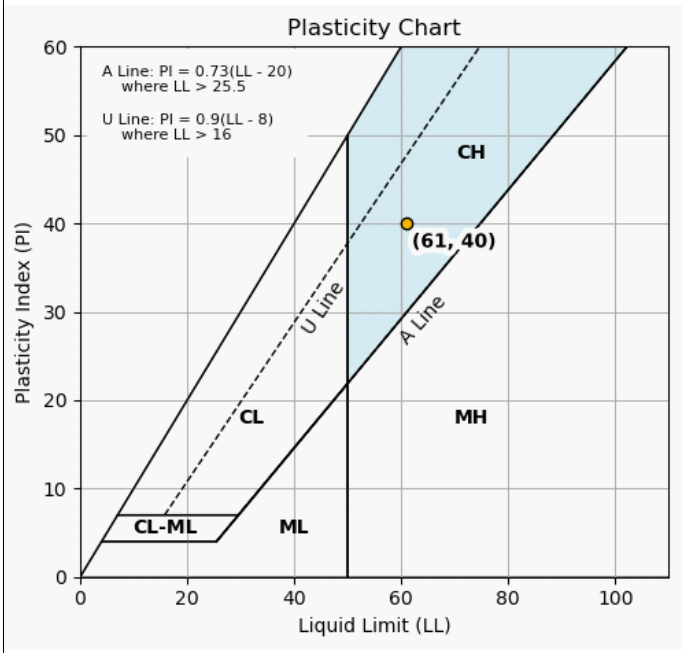

performed using manual LL device, PL plastic roller device, straight metal grooving tool, one-point LL method; sample air dried, pulverized, processed through #40 sieve, and hydrated with distilled water overnight

Test Methods Performed:

Moisture Content	*Atterberg Limits*	*Sieve Analysis*	*Proctor*
☑ ASTM D2216	☐ ASTM D4318	☑ ASTM D1140	☐ ASTM D698
☐ AASHTO T265	☐ AASHTO T89, T90	☑ ASTM D6913	☐ AASHTO T99
	☑ VTM 7	☐ ASTM C136	☑ VTM 1
		☐ ASTM C117	☐ ASTM D1557
			☐ AASHTO T180

Tested by: DLF

COMMONWEALTH OF VIRGINIA
MARK A. VIOLA
Lic. No. 22705
PROFESSIONAL ENGINEER

1356 North Main Street
Harrisonburg, Virginia 22802

AASHTO ACCREDITED

Phone: (540) 434 0400
Fax: (540) 434 0447

VIOLA ENGINEERING, PC
Geotechnical • Geophysical • Construction • Materials
P.O. Box 575 Broadway, Virginia 22815
(540) 434-0400 fax: (540) 434-0447

Sieve Analysis Results

Project: Daleville Phase III
Project Number: 253441
Date Performed: 11/13/2025

Sample Description: **25CBR-001** : Orange-Brown Fat Clay with Sand
Sample Location: Combined Sample from Boreholes 1, 2, 4, & 5 at 0-5ft Depth
Sample Retrieval Date: 11/6/2025 Total Dry Sample Weight: 735.9 g

Wash Information: ☑ wash performed ☐ no wash performed
☑ deflocculant/wetting agent used soak time (hrs): 2

Material Specification: ☐ % passing ☐ % retained ☐ not applicable

Designation	Size				mm	Weight Retained[1] (g)	Percent Retained	Percent Passing	Minimum	Maximum
3-inch	16x24				75					
2.5-inch	16x24				63					
2-inch	16x24				50					
1.5-inch	16x24				37.5					
1-inch	16x24				25					
3/4-inch	☑	16×24	☑	8-in	19					
1/2-inch	☑	16×24	☑	8-in	12.5	0.0	0%	100%		
3/8-inch	☑	16×24	☑	8-in	10	20.4	3%	97%		
#4	☑	16×24	☑	8-in	4.75	32.6	4%	96%		
#8	8-in				2.36					
#10	8-in				2.00	51.8	7%	93%		
#16	8-in				1.18					
#20	8-in				0.850	71.4	10%	90%		
#30	8-in				0.600					
#40	8-in				0.425	86.4	12%	88%		
#50	8-in				0.300					
#60	8-in				0.250	98.4	13%	87%		
#100	8-in				0.150	111.5	15%	85%		
#120	8-in				0.125					
#140	8-in				0.106	121.6	17%	83%		
#200	8-in				0.075	132.0	18%	82%		

Sieve analysis performed in accordance with ASTM D1140 and ASTM D6913 unless noted otherwise.

☐ entire sample sieved ☑ portions split and sieved to obtain full gradation ☐ meets specification

Method used: Method A
Procedure to obtain specimen: Air-Dried Procedure
Sample was composite sieved with 3/4-in separating sieve
Percent retained on coarsest sieve in fine sieve less than 2%
Ultrasonic bath and shaking apparatus not used in dispersion process

Remarks:

weight retained for portions where sample was split represents the full predicted weight retained; actual weight retained is lower

COMMONWEALTH OF VIRGINIA
MARK A. VIOLA
Lic. No. 22705
PROFESSIONAL ENGINEER

AASHTO ACCREDITED

1356 North Main Street
Harrisonburg, Virginia 22802
Phone: (540) 434 0400
Fax: (540) 434 0447

VIOLA ENGINEERING, PC
Geotechnical • Geophysical • Construction • Materials
P.O. Box 575 Broadway, Virginia 22815
(540) 434-0400 fax: (540) 434-0447

Organic Matter Content

Project Name: Daleville Phase III
Project Number: 253441
Date Performed: 11/13/2025
Technician: DLF

ASTM D2974 Standard Test Methods for Moisture, Ash, and Organic Matter of Peat and Other Organic Soils

Moisture Content Method	A
Organic Content Method	C
Sample ID:	25CBR-001
Tare ID	B
Mass of crucible + lid (g)	141.98
Mass of moist specimen + lid (g)	191.68
Mass of oven dried + lid (g)	188.7
Moisture Content %	6.38
Test temperature of Furnace (c)	440
Length of test (nearest 15 min.)	4hrs
Mass of crucible, ash +lid (g)	187.5
Ash Content	97.43
Organic Material %	2.57

Remarks:

VIOLA ENGINEERING, PC
Geotechnical • Geophysical • Construction • Materials
P.O. Box 575 Broadway, Virginia 22815
(540) 434-0400 fax: (540) 434-0447

Sample Photos

Project:	Daleville Phase III
Project Number:	253441
Date Performed:	11/13/2025

Sample Description:	**25CBR-001** :	Orange-Brown Fat Clay with Sand	
Sample Location:	Combined Sample from Boreholes 1, 2, 4, & 5 at 0-5ft Depth		
Date Received:	11/6/2025	As Received Moisture Content (%):	NA

1356 North Main Street
Harrisonburg, Virginia 22802

Phone: (540) 434 0400
Fax: (540) 434 0447

AASHTO ACCREDITED

VIOLA ENGINEERING, PC
Geotechnical • Geophysical • Construction • Materials
P.O. Box 575, Broadway, Virginia 22815
(540) 434-0400 fax: (540) 434-0447

Specific Gravity of Soil Solids by Water Pycnometer (ASTM D854)

Sample Information:

Project Number:	PTL-253441
Project Name:	Daleville Phase III
Sample Name:	2025 CBR Sample 001
Sample ID:	25CBR-001
Sample Location:	Combined Sample from Boreholes 1, 2, 4, & 5 at 0-5ft Depth
Sample Classification:	Orange-Brown Fat Clay with Sand
Date Complete:	11/12/2025
Lab Technician:	DLF
Method:	B: Dry

Test Result:

Soil Particles Passing #4 Sieve (%):	100.00
Pycnometer Dry Mass (g):	167.37
Average Calibrated Pycnometer Dry Mass M_p (g):	167.37
Average Calibrated Pycnometer Volume V_p (ml):	499.78
Test Temperature T_t (°C):	21.60
Density of Water at Temp. $\rho_{w,t}$ (g/ml):	0.997863076
Mass of Pycnometer, Water and Soil Particles $M_{\rho ws,t}$ (g):	711.56
Tare No.:	G12
Tare Mass (g):	48.65
Soil Solids + Tare (g):	121.27
Soil Solid Dry Mass M_s (g):	72.62
Mass of the Pycnometer and Water at Test $M_{\rho w,t}$ (g):	666.08
Specific Gravity of Soil Solids at Test Temp [G_{tl}]:	2.676
Specific Gravity of Soil Solids at 20°C [$G_{20°C}$]:	2.675

Pycnometer ID:
sp-1

created: 1/10/2020 *revised: 2/5/2020*

Remarks:

VIOLA ENGINEERING, PC
Geotechnical • Geophysical • Construction • Materials
P.O. Box 575 Broadway, Virginia 22815
(540) 434-0400 fax: (540) 434-0447

Moisture-Density Relationship

Project:	Daleville Phase III
Project Number:	253441
Date Performed:	11/11/2025

Sample Description: **25CBR-001** : Orange-Brown Fat Clay with Sand

Sample Location: Combined Sample from Boreholes 1, 2, 4, & 5 at 0-5ft Depth

Sample ID:	25CBR-001	
Test Method:	D698 A	
Maximum Dry Density (pcf):	**103.0**	
Optimum Moisture Content (%):	**20.5**	✓
Apparent Specific Gravity:	2.676	☐ assumed
Oversize Absorption (%):	1.5	☑ measured
Oversize Fraction (%):	0%	
Corrected Maximum Dry Density (pcf):	103.0	
Optimum Moisture Content (%):	20.5	

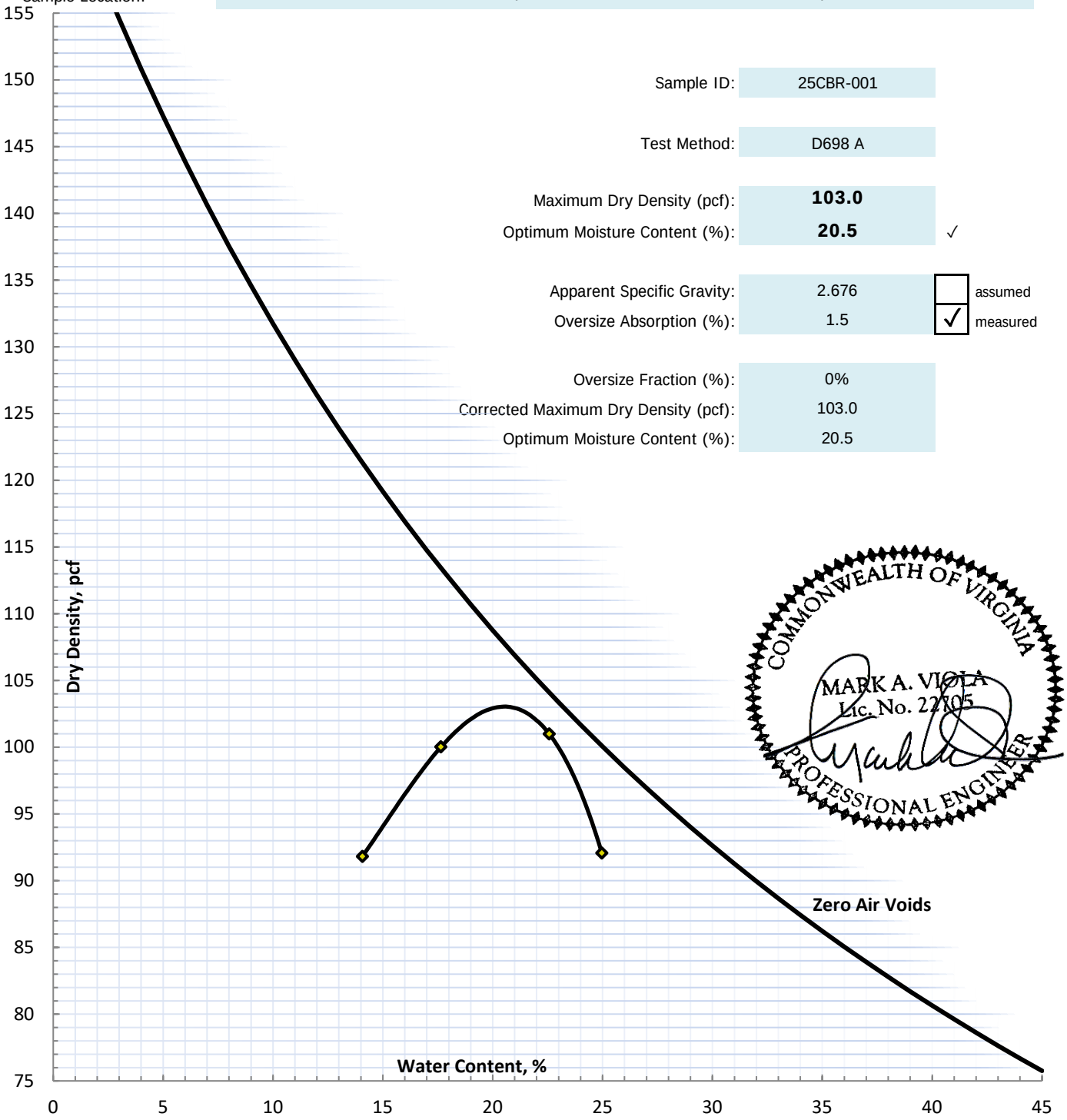

COMMONWEALTH OF VIRGINIA
MARK A. VIOLA
Lic. No. 22705
PROFESSIONAL ENGINEER

sample air dried, pulverized and sieved, split into point samples, hydrated overnight, pounded with manual rammer

VIOLA ENGINEERING, PC
Geotechnical • Geophysical • Construction • Materials
P.O. Box 575 Broadway, Virginia 22815
(540) 434-0400 fax: (540) 434-0447

California Bearing Ratio Test Results (VTM-8)

Project:	Daleville Phase III
Project No.:	253441
Sample ID:	25CBR-001
Soil Description:	Orange-Brown Fat Clay with Sand
% passing No. 200 sieve:	82.1%
Soil Classification(s):	USCS: CH AASHTO: A-7-6 GI: 34.47
Corrected Max Dry Density:	103.0
Corrected Optimum Moisture:	20.5%
Percent Compaction (unsoaked):	99.4%
Moisture Content (unsoaked):	20.6%
Moisture Content (soaked):	23.6%
Moisture - Top 1 inch (soaked):	25.4%
Swell:	0.82%
Date of Punch:	Monday, November 17, 2025

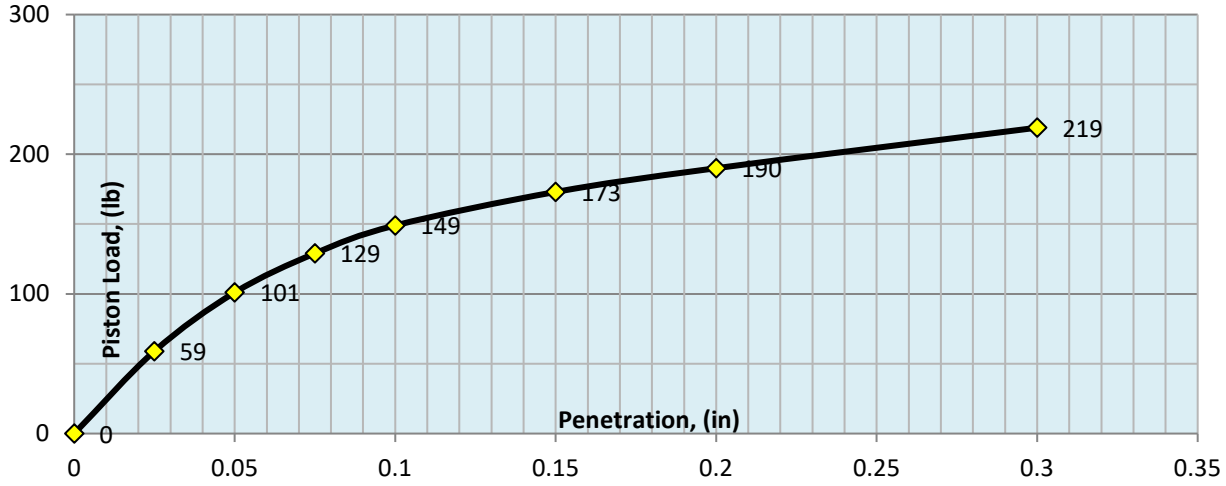

Penetration Depth:	0.1-in	0.2-in
Soaked CBR Value:	**5**	4.3

Remarks:

- Soaked CBR value calculated from load at 0.1 inch penetration.
- Specimen compacted in three layers with 100 drops of a 5.5-lb. hammer from 12 inches.

COMMONWEALTH OF VIRGINIA
MARK A. VIOLA
Lic. No. 22705
PROFESSIONAL ENGINEER

1356 North Main Street
Harrisonburg, VA 22802

AASHTO ACCREDITED

Phone: (540) 434 0400
Fax: (540) 434 0447

Virginia DOT Standard Drawings

VIOLA ENGINEERING, PC

GENERAL

1. METHOD "A" PIPE BEDDING SHALL BE USED FOR ALL TYPES OF PIPE CULVERTS WITHIN THE APPLICABLE HEIGHT OF COVER RANGE NOTED IN THE STANDARD PC-1 TABLES UNLESS OTHERWISE NOTED ON THE PLANS.
2. H = HEIGHT OF COVER MEASURED FROM TOP OF CULVERT TO FINISHED GRADE.
3. b = EXCAVATION DEPTH AS SHOWN ON PLANS OR TO FIRM BEARING SOIL.

CIRCULAR PIPE

1. D = OUTSIDE DIAMETER OF PIPE.
2. d = INSIDE DIAMETER OF PIPE.
3. X = WIDTH OF CLASS I BACKFILL MATERIAL BEYOND THE EXTREMITY OF THE PIPE.
   X = 12" WHERE d IS LESS THAN 36".
   X = 18" WHERE d IS 36" AND GREATER.
4. WHERE DIRECTED BY THE ENGINEER. BEDDING MATERIAL MAY BE ELIMINATED FOR NORMAL EARTH FOUNDATIONS UNDER ROUTINE ENTRANCE PIPE (EXCEPT PLASTIC PIPE) 30" AND LESS IN DIAMETER WITH HEIGHT OF COVER 15' OR LESS.
5. REGULAR BACKFILL MATERIAL MAY BE USED IN LIEU OF CLASS I BACKFILL MATERIAL FOR ALL FOUNDATION TYPES FOR ROUTINE ENTRANCE PIPE (EXCEPT PLASTIC PIPE) 30" AND LESS IN DIAMETER WITH HEIGHT OF COVER 15' OR LESS.
6. BEDDING MATERIAL AND CLASS I BACKFILL MATERIAL MAY BE ELIMINATED FOR SHOULDER SLOT INLET (DI-13) OUTLET PIPES INSTALLATIONS.

ELLIPTICAL PIPE

1. S_1 = OUTSIDE SPAN DIMENSION OF PIPE.
2. S_2 = INSIDE SPAN DIMENSION OF PIPE.
3. R = OUTSIDE RISE DIMENSION OF PIPE.
4. X = WIDTH OF CLASS I BACKFILL MATERIAL BEYOND THE EXTREMITY OF THE PIPE.
   X = 12" WHERE S_2 IS LESS THAN 36".
   X = 18" WHERE S_2 IS 36" AND GREATER
5. WHERE DIRECTED BY THE ENGINEER. BEDDING MATERIAL MAY BE ELIMINATED FOR NORMAL EARTH FOUNDATIONS UNDER ROUTINE ENTRANCE PIPE WHERE S_2 IS 38" OR LESS AND HEIGHT OF COVER 15' OR LESS.
6. REGULAR BACKFILL MATERIAL MAY BE USED IN LIEU OF CLASS I BACKFILL MATERIAL FOR ALL FOUNDATION TYPES FOR ROUTINE ENTRANCE PIPE WHERE S_2 IS 38" OR LESS AND HEIGHT OF COVER 15' OR LESS.

PIPE ARCH

1. S = SPAN DIMENSION OF PIPE.
2. R = RISE DIMENSION OF PIPE.
3. B = SEE PC-1 TABLE FOR APPLICABLE PIPE MATERIAL
4. x = WIDTH OF CLASS I BACKFILL MATERIAL BEYOND THE EXTREMITY OF THE PIPE.
   x = 12" WHERE S_2 IS LESS THAN 36".
   x = 18" WHERE S_2 IS 36" AND GREATER
5. WHERE DIRECTED BY THE ENGINEER. BEDDING MATERIAL MAY BE ELIMINATED FOR NORMAL EARTH FOUNDATIONS UNDER ROUTINE ENTRANCE PIPE WHERE S_2 IS 35" OR LESS AND HEIGHT OF COVER 15' OR LESS.
6. REGULAR BACKFILL MATERIAL MAY BE USED IN LIEU OF CLASS I BACKFILL MATERIAL FOR ALL FOUNDATION TYPES FOR ROUTINE ENTRANCE PIPE WHERE S IS 35" OR LESS AND HEIGHT OF COVER 15' OR LESS.

SPECIFICATION REFERENCE	INSTALLATION OF PIPE CULVERTS & STORM SEWERS GENERAL NOTES	VDOT ROAD AND BRIDGE STANDARDS	
302 303	VIRGINIA DEPARTMENT OF TRANSPORTATION	REVISION DATE	SHEET 1 OF 1
			107.00

PB-1

NO PROJECTION OF PIPE ABOVE GROUND LINE

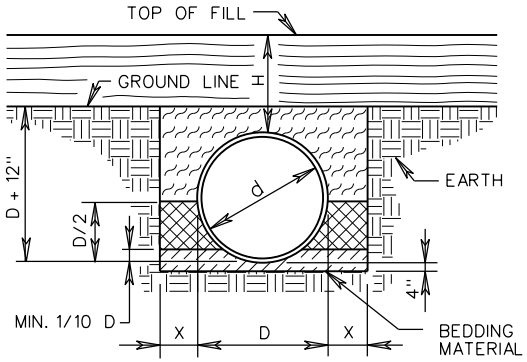

NORMAL EARTH FOUNDATION

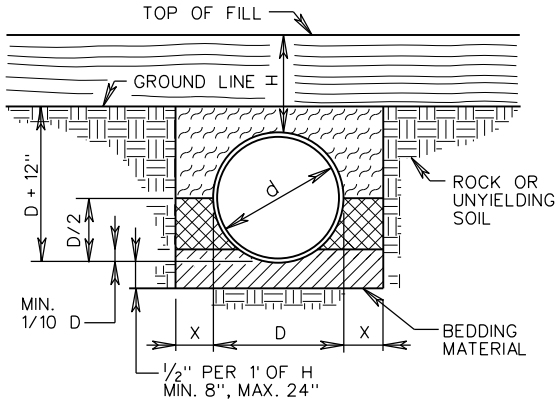

ROCK FOUNDATION

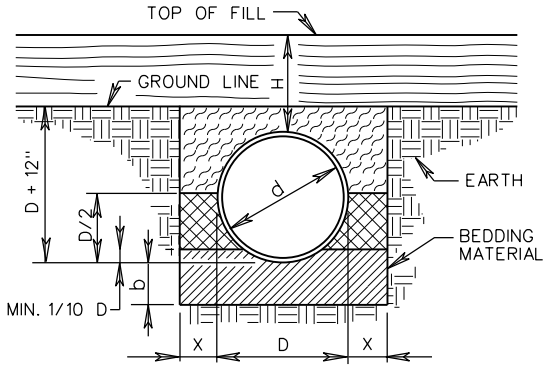

FOUNDATION SOFT, YIELDING, OR OTHERWISE UNSUITABLE MATERIAL

PIPE PROJECTION ABOVE GROUND LINE

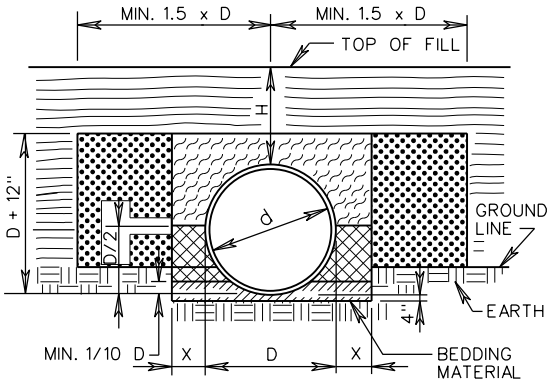

NORMAL EARTH FOUNDATION

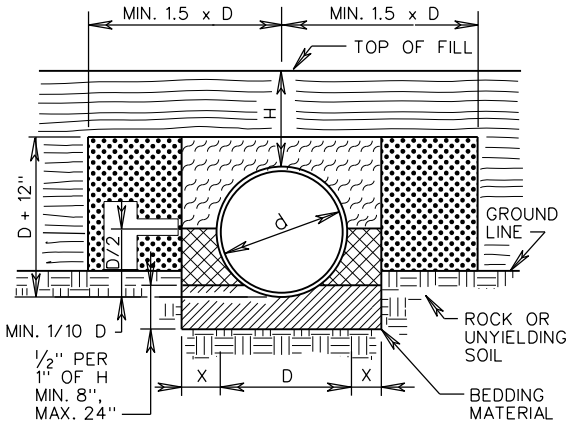

ROCK FOUNDATION

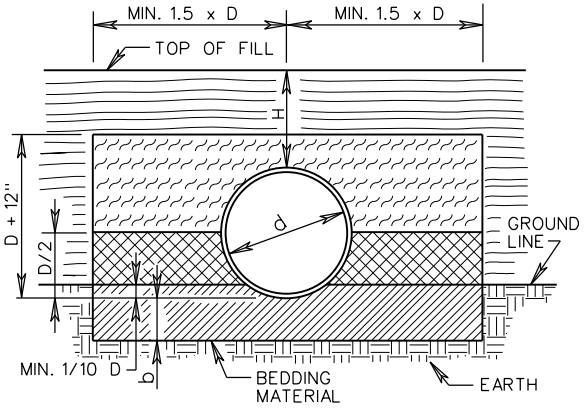

FOUNDATION SOFT, YIELDING, OR OTHERWISE UNSUITABLE MATERIAL

BEDDING MATERIAL IN ACCORDANCE WITH SECTION 302 OF THE ROAD AND BRIDGE SPECIFICATIONS.

CLASS I BACKFILL MATERIAL IN ACCORDANCE WITH SECTION 302 OF THE ROAD AND BRIDGE SPECIFICATIONS.

FOR PLASTIC PIPE CLASS I BACKFILL MATERIAL IN ACCORDANCE WITH SECTION 302 OF THE ROAD AND BRIDGE SPECIFICATIONS.

FOR ALL OTHER PIPE REGULAR BACKFILL MATERIAL IN ACCORDANCE WITH SECTION 302 OF THE ROAD AND BRIDGE SPECIFICATIONS.

EMBANKMENT

REGULAR BACKFILL MATERIAL IN ACCORDANCE WITH SECTION 302 OF THE ROAD AND BRIDGE SPECIFICATIONS.

NOTES:

FOR GENERAL NOTES ON PIPE BEDDING, SEE INSTALLATION OF PIPE CULVERTS AND STORM SEWERS GENERAL NOTES ON SHEET 107.00.

CRUSHED GLASS CONFORMING TO THE SIZE REQUIREMENTS FOR CRUSHER RUN AGGREGATE SIZE 25 AND 26 MAY BE USED IN PLACE OF CLASS I BACKFILL.

VDOT
ROAD AND BRIDGE STANDARDS

SHEET 1 OF 4

107.01

REVISION DATE
07/12

INSTALL. OF PIPE CULVERTS AND STORM SEWERS CIRC. PIPE BEDDING AND BACKFILL - METHOD "A"

VIRGINIA DEPARTMENT OF TRANSPORTATION

SPECIFICATION REFERENCE

302
303

PB-1

NO PROJECTION OF PIPE ABOVE GROUND LINE

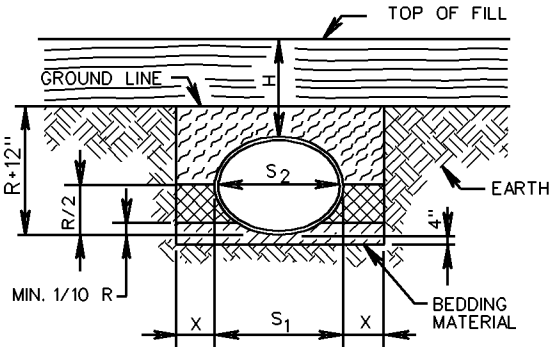

NORMAL EARTH FOUNDATION

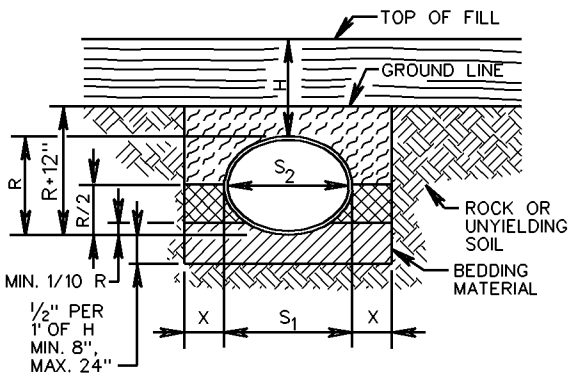

ROCK FOUNDATION

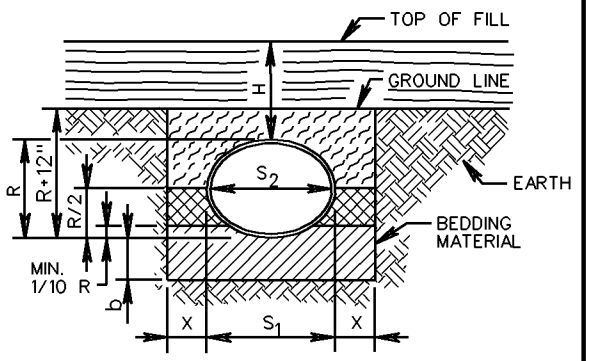

FOUNDATION SOFT, YIELDING, OR OTHERWISE UNSUITABLE MATERIAL

PIPE PROJECTION ABOVE GROUND LINE

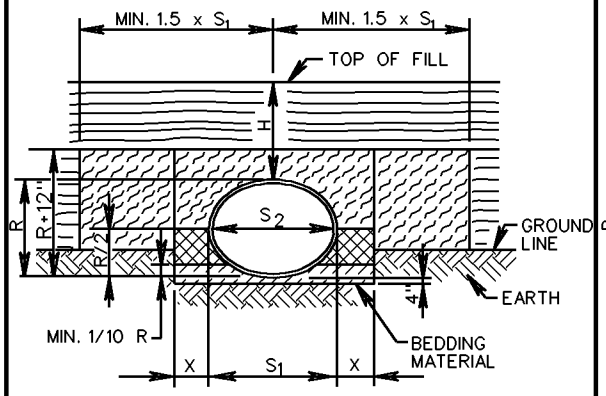

NORMAL EARTH FOUNDATION

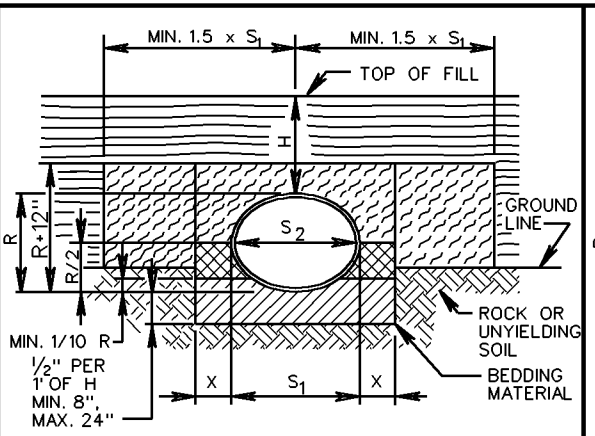

ROCK FOUNDATION

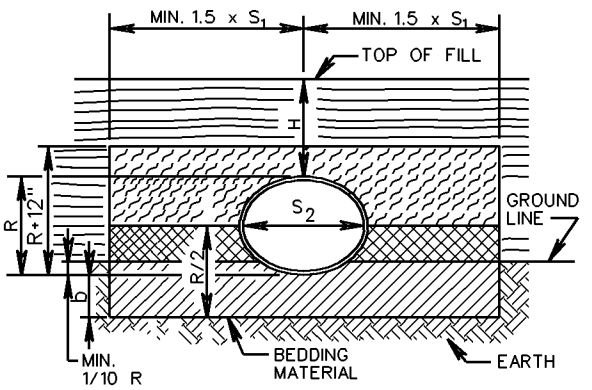

FOUNDATION SOFT, YIELDING, OR OTHERWISE UNSUITABLE MATERIAL

- BEDDING MATERIAL IN ACCORDANCE WITH SECTION 302 OF THE ROAD AND BRIDGE SPECIFICATIONS.
- CLASS I BACKFILL MATERIAL IN ACCORDANCE WITH SECTION 302 OF THE ROAD AND BRIDGE SPECIFICATIONS.
- REGULAR BACKFILL MATERIAL IN ACCORDANCE WITH SECTION 302 OF THE ROAD AND BRIDGE SPECIFICATIONS.
- EMBANKMENT

NOTES:

FOR GENERAL NOTES ON PIPE BEDDING, SEE INSTALLATION OF PIPE CULVERTS AND STORM SEWERS GENERAL NOTES ON SHEET 107.00.

CRUSHED GLASS CONFORMING TO THE SIZE REQUIREMENTS FOR CRUSHER RUN AGGREGATE SIZE 25 AND 26 MAY BE USED IN PLACE OF CLASS I BACKFILL.

SPECIFICATION REFERENCE	INSTAL. OF PIPE CULVERTS AND STORM SEWERS ELLIP. PIPE BEDDING AND BACKFILL - METHOD "A"	VDOT ROAD AND BRIDGE STANDARDS
302 303	VIRGINIA DEPARTMENT OF TRANSPORTATION	REVISION DATE 10/09 — SHEET 2 OF 4 — 107.02

PB-1

NO PROJECTION OF PIPE ARCH ABOVE GROUND LINE

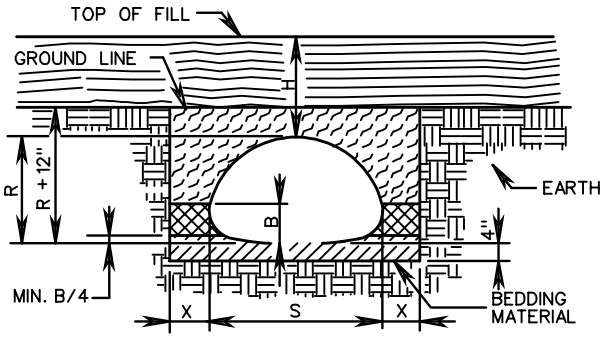

NORMAL EARTH FOUNDATION

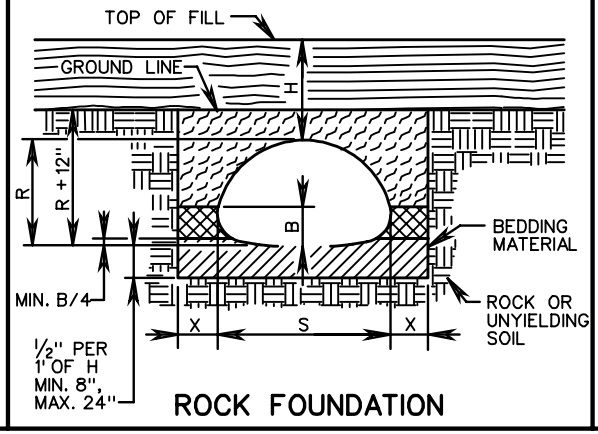

ROCK FOUNDATION

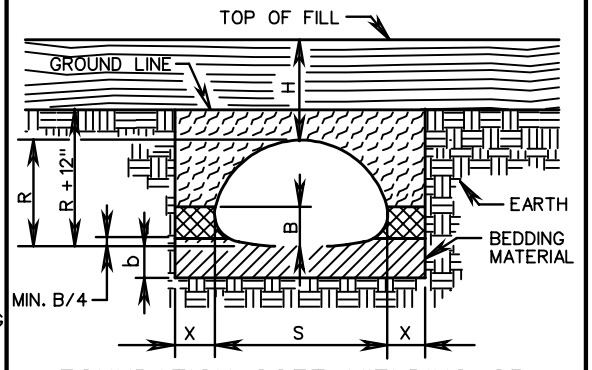

FOUNDATION SOFT, YIELDING, OR OTHERWISE UNSUITABLE MATERIAL

PIPE ARCH PROJECTION ABOVE GROUND LINE

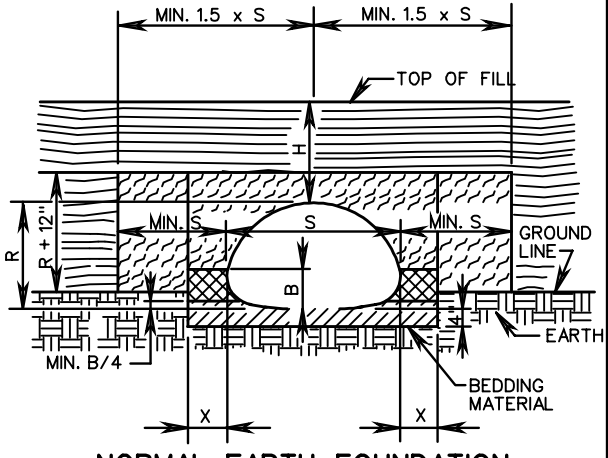

NORMAL EARTH FOUNDATION

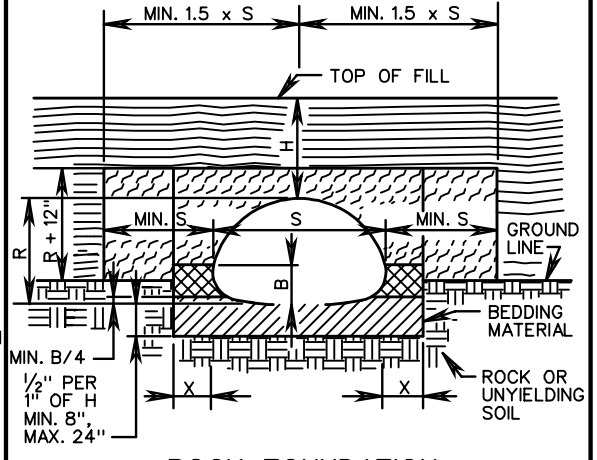

ROCK FOUNDATION

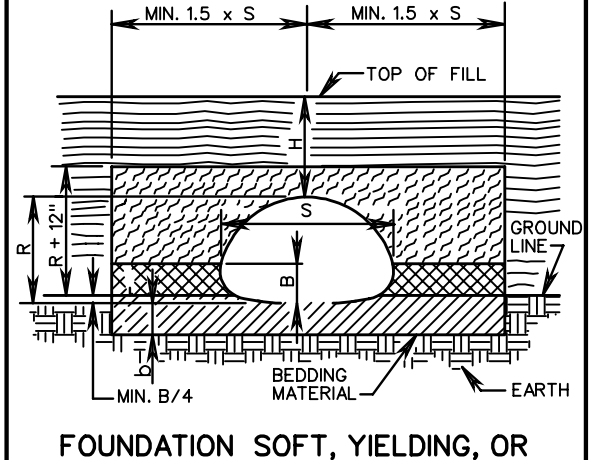

FOUNDATION SOFT, YIELDING, OR OTHERWISE UNSUITABLE MATERIAL

- BEDDING MATERIAL IN ACCORDANCE WITH SECTION 302 OF THE ROAD AND BRIDGE SPECIFICATIONS.
- CLASS I BACKFILL MATERIAL IN ACCORDANCE WITH SECTION 302 OF THE ROAD AND BRIDGE SPECIFICATIONS.
- REGULAR BACKFILL MATERIAL IN ACCORDANCE WITH SECTION 302 OF THE ROAD AND BRIDGE SPECIFICATIONS.
- EMBANKMENT

NOTE:

FOR GENREAL NOTES ON PIPE BEDDING, SEE INSTALLATION OF PIPE CULVERTS AND STORM SEWERS GENERAL NOTES ON SHEET 107.00.

CRUSHED GLASS CONFORMING TO THE SIZE REQUIREMENTS FOR CRUSHER RUN AGGREGATE SIZE 25 AND 26 MAY BE USED IN PLACE OF CLASS I BACKFILL.

VDOT
ROAD AND BRIDGE STANDARDS

SHEET 3 OF 4	REVISION DATE
107.03	

INSTALLATION OF PIPE CULVERTS AND STORM SEWERS PIPE ARCH BEDDING AND BACKFILL

VIRGINIA DEPARTMENT OF TRANSPORTATION

SPECIFICATION REFERENCE

302
303

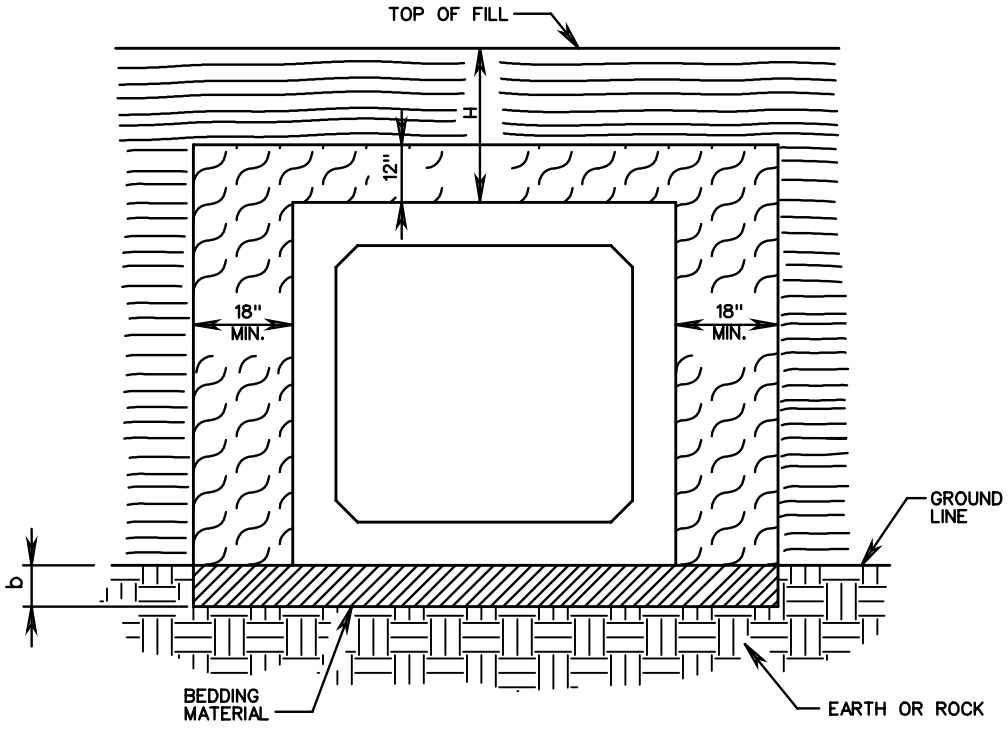

H - HEIGHT OF COVER MEASURED FROM TOP OF CULVERT TO FINISHED GRADE.

FOR NORMAL EARTH FOUNDATION:
FOR PRECAST AND CAST IN PLACE BOX CULVERT b - 6"

FOR ROCK FOUNDATION:
FOR PRECAST BOX CULVERT b - 1/4" PER 12" OF H - 8" MIN., 24" MAX.
FOR CAST IN PLACE BOX CULVERT b=DEPTH AS SHOWN ON PLANS OR WHERE NO BEDDING IS SPECIFIED BOTTOM SLAB TO BE KEYED INTO EXISTING ROCK FOUNDATION.
FOR SOFT, YIELDING OR OTHERWISE UNSUITABLE FOUNDATION:
FOR PRECAST AND CAST IN PLACE BOX CULVERT
b - DEPTH AS SHOWN ON PLANS OR TO FIRM BEARING SOIL.

BEDDING MATERIAL IN ACCORDANCE WITH SECTION 302 OF THE ROAD AND BRIDGE SPECIFICATIONS.

REGULAR BACKFILL MATERIAL IN ACCORDANCE WITH SECTION 302 OF THE ROAD AND BRIDGE SPECIFICATIONS.

EMBANKMENT

SPECIFICATION REFERENCE	INSTALLATION OF BOX CULVERT BEDDING AND BACKFILL - METHOD "A"	VDOT ROAD AND BRIDGE STANDARDS
302 303	VIRGINIA DEPARTMENT OF TRANSPORTATION	REVISION DATE / SHEET 4 OF 4 / 107.04

Field Sample Photographs

VIOLA ENGINEERING, PC

Project Name: Daleville Phase III
Project Number: PTL-253441
Report Type: Splitspoon Sample Photograph Log

VIOLA ENGINEERING, PC
Geotechnical • Geophysical • Construction • Materials
Harrisonburg 540-434-0400
Winchester 540-313-4270

2025-11-06 **25BH-001** @ **0.0ft** N60: **35** Recovery: **23.0in**

2025-11-06 **25BH-001** @ **2.5ft** N60: **16** Recovery: **23.0in**

2025-11-06 **25BH-001** @ **5.0ft** N60: **14** Recovery: **24.0in**

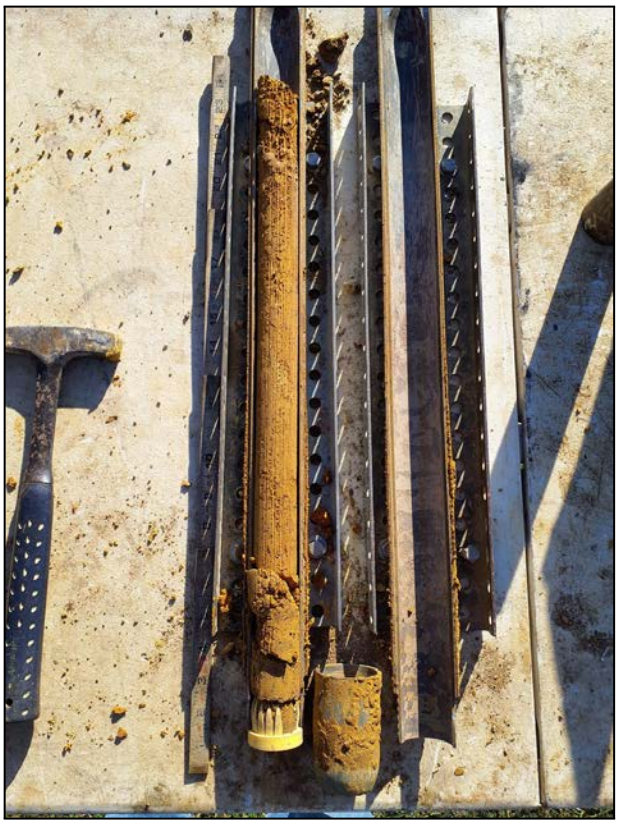

2025-11-06 **25BH-001** @ **7.5ft** N60: **14** Recovery: **24.0in**

Project Name: Daleville Phase III
Project Number: PTL-253441
Report Type: Splitspoon Sample Photograph Log

VIOLA ENGINEERING, PC
Geotechnical • Geophysical • Construction • Materials
Harrisonburg 540-434-0400
Winchester 540-313-4270

2025-11-06 **25BH-001** @ **10.0ft** N60: **6** Recovery: **24.0in**

2025-11-06 **25BH-001** @ **15.0ft** N60: **5** Recovery: **24.0in**

2025-11-06 **25BH-001** @ **20.0ft** N60: **6** Recovery: **24.0in**

2025-11-06 **25BH-002** @ **0.0ft** N60: **16** Recovery: **21.0in**

Project Name: Daleville Phase III
Project Number: PTL-253441
Report Type: Splitspoon Sample Photograph Log

VIOLA ENGINEERING, PC
Geotechnical • Geophysical • Construction • Materials
Harrisonburg 540-434-0400
Winchester 540-313-4270

2025-11-06 **25BH-002** @ **2.5ft** N60: **12** Recovery: **24.0in**

2025-11-06 **25BH-002** @ **5.0ft** N60: **9** Recovery: **24.0in**

2025-11-06 **25BH-002** @ **7.5ft** N60: **8** Recovery: **24.0in**

2025-11-06 **25BH-002** @ **10.0ft** N60: **2** Recovery: **17.0in**

Project Name: Daleville Phase III
Project Number: PTL-253441
Report Type: Splitspoon Sample Photograph Log

VIOLA ENGINEERING, PC
Geotechnical • Geophysical • Construction • Materials
Harrisonburg 540-434-0400
Winchester 540-313-4270

2025-11-06 **25BH-002** @ **15.0ft** N60: **2** Recovery: **24.0in**

2025-11-06 **25BH-002** @ **20.0ft** N60: **2** Recovery: **24.0in**

2025-11-06 **25BH-003** @ **0.0ft** N60: **16** Recovery: **19.0in**

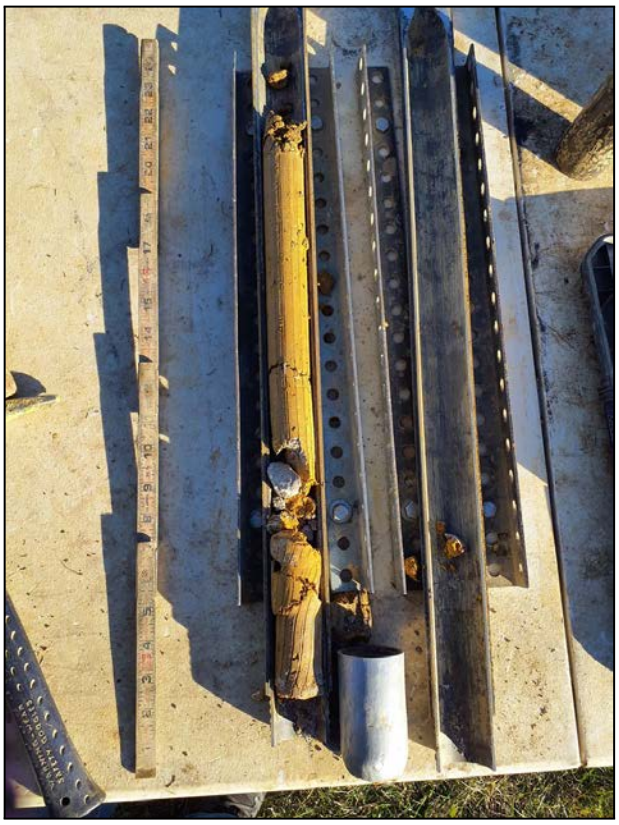

2025-11-06 **25BH-003** @ **2.5ft** N60: **17** Recovery: **21.0in**

Project Name: Daleville Phase III
Project Number: PTL-253441
Report Type: Splitspoon Sample Photograph Log

VIOLA ENGINEERING, PC
Geotechnical • Geophysical • Construction • Materials
Harrisonburg 540-434-0400
Winchester 540-313-4270

2025-11-06 **25BH-003** @ **5.0ft** N60: **13** Recovery: **24.0in**

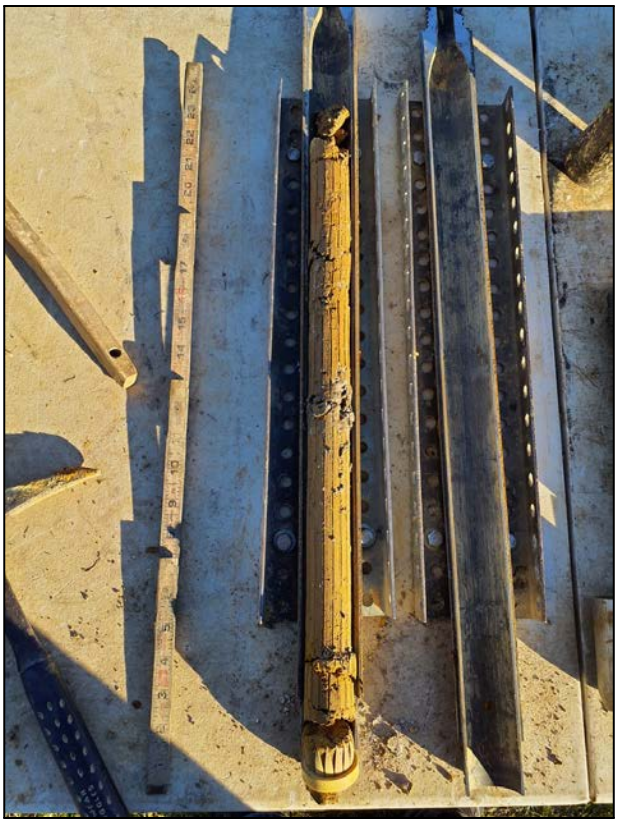

2025-11-06 **25BH-003** @ **7.5ft** N60: **10** Recovery: **24.0in**

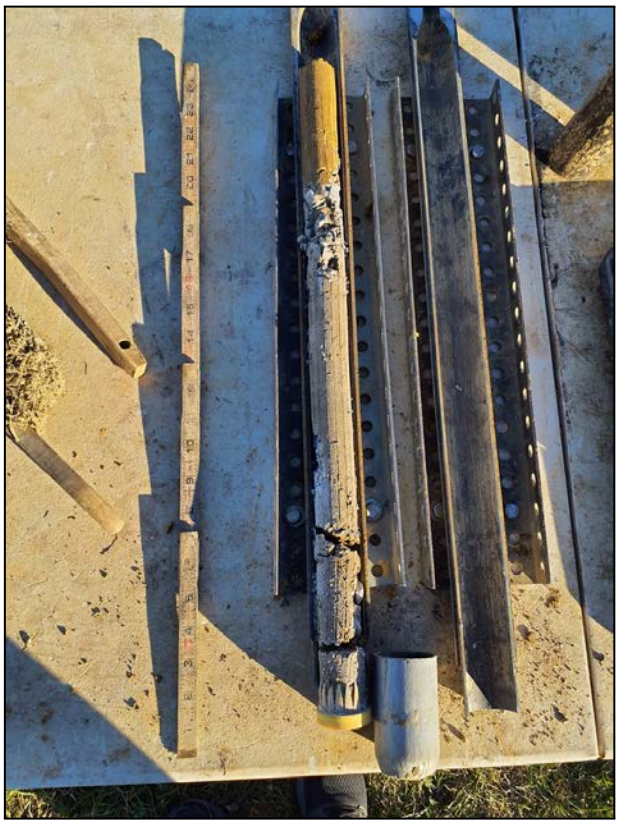

2025-11-06 **25BH-003** @ **10.0ft** N60: **27** Recovery: **24.0in**

2025-11-06 **25BH-003** @ **15.0ft** N60: **14** Recovery: **23.0in**

Project Name: Daleville Phase III
Project Number: PTL-253441
Report Type: Splitspoon Sample Photograph Log

VIOLA ENGINEERING, PC
Geotechnical • Geophysical • Construction • Materials
Harrisonburg 540-434-0400
Winchester 540-313-4270

2025-11-06 **25BH-003** @ **20.0ft** N60: **11** Recovery: **24.0in**

2025-11-06 **25BH-004** @ **0.0ft** N60: **22** Recovery: **21.0in**

2025-11-06 **25BH-004** @ **2.5ft** N60: **12** Recovery: **20.0in**

2025-11-06 **25BH-004** @ **5.0ft** N60: **10** Recovery: **24.0in**

Project Name: Daleville Phase III
Project Number: PTL-253441
Report Type: Splitspoon Sample Photograph Log

VIOLA ENGINEERING, PC
Geotechnical • Geophysical • Construction • Materials
Harrisonburg 540-434-0400
Winchester 540-313-4270

2025-11-06 **25BH-004** @ **7.5ft** N60: **9** Recovery: **21.0in**

2025-11-06 **25BH-004** @ **10.0ft** N60: **23** Recovery: **24.0in**

2025-11-06 **25BH-004** @ **15.0ft** N60: **16** Recovery: **24.0in**

2025-11-06 **25BH-004** @ **20.0ft** N60: **12** Recovery: **24.0in**

Project Name: Daleville Phase III
Project Number: PTL-253441
Report Type: Splitspoon Sample Photograph Log

VIOLA ENGINEERING, PC
Geotechnical • Geophysical • Construction • Materials
Harrisonburg 540-434-0400
Winchester 540-313-4270

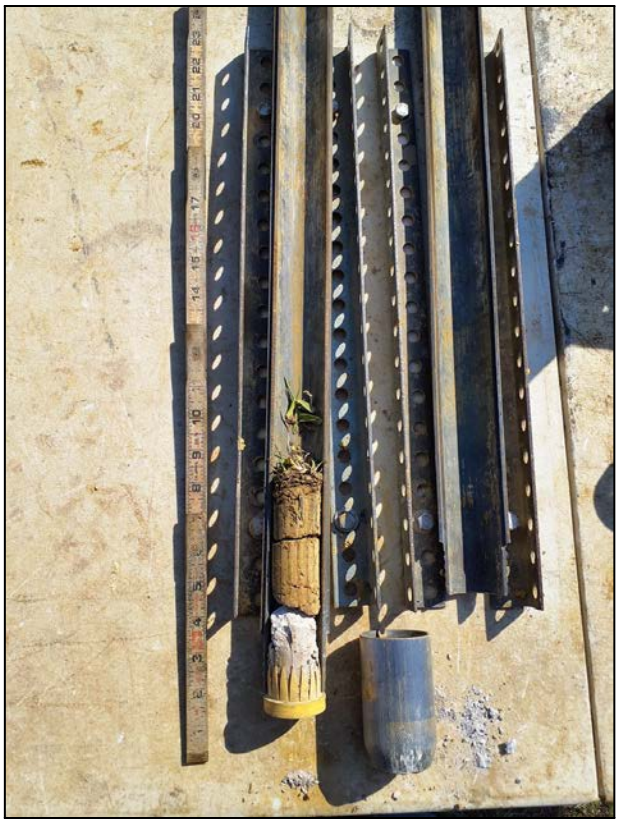

2025-11-06 **25BH-005** @ **0.0ft** N60: **33** Recovery: **9.0in**

2025-11-06 **25BH-005** @ **2.5ft** N60: **11** Recovery: **24.0in**

2025-11-06 **25BH-005** @ **5.0ft** N60: **14** Recovery: **17.0in**

2025-11-06 **25BH-005** @ **7.5ft** N60: **13** Recovery: **24.0in**

Project Name: Daleville Phase III
Project Number: PTL-253441
Report Type: Splitspoon Sample Photograph Log

VIOLA ENGINEERING, PC
Geotechnical • Geophysical • Construction • Materials
Harrisonburg 540-434-0400
Winchester 540-313-4270

2025-11-06 **25BH-005** @ **10.0ft** N60: **13** Recovery: **24.0in**

2025-11-06 **25BH-005** @ **15.0ft** N60: **9** Recovery: **24.0in**

2025-11-06 **25BH-005** @ **20.0ft** N60: **16** Recovery: **24.0in**

Botetourt County
Climatic Design Criteria
& ASCE Hazard Report

VIOLA ENGINEERING, PC

For more permit information please visit:
botetourtva.gov/permits

Botetourt County
Climatic Design Criteria

Residential & Commercial Construction Design Parameters							
GROUND SNOW LOAD	WIND DESIGN Speed (mph)	SEISMIC DESIGN CATEGORY	SUBJECT TO DAMAGE FROM			WINTER DESIGN TEMP	ICE BARRIER UNDERLAYMENT REQUIRED
			Weathering	Frost line	Termite		
30 psf	115	B	Severe	24”	Moderate	16º F	No

Notes:
1. Based on ASCE 7-16 (Residential) and ASCE 7-22
2. For site specific Seismic design data, per the 2021 VCC, Section 1603, go to https://ascehazardtool.org/ - Use Reference: ASCE 7-22, Risk Category: II, Site Class: D - Default, then Enter the address

FLOOD HAZARDS[1]				Additional Data
	National Flood Insurance Program (NFIP) Entry	Effective Flood Study & Flood Insurance Rate Map (FIRM) Date	Community No.	• Heating Degree Days[2] - 2,365 • Cooling Degree Days[2] - 2,227 • Climate Zone - 4 • Mean Annual Temperature[3] - 56.6º F • Air Freezing Index - 1500 or less • Latitude: ~37.55º N, Longitude: ~79.80º W • Soil Class: SC, ML, CL, & Inorganic CL 60 • 1500psf Soil Bearing (Shrink/Swell)
Botetourt County	05/16/1978	12/17/2010	510018	

Sources:
1. fema.gov/cis/VA.html & msc.fema.gov/portal/home
2. eia.gov/energyexplained/units-and-calculators/degree-days.php
3. ncei.noaa.gov/access/us-climate-normals/ *(Based on Buchanan Station # USC00441121)*

Botetourt County Contact information

Mark Bowles
Building Official
57 S. Center Drive
Daleville, VA 24083
Building Official: (540) 928-2092, mbowles@botetourtva.gov
Permit Office: (540) 928-2070, permits@botetourtva.gov

This information is provided for use by builders and designers, and is in accordance with the following adopted code editions:

- 2021 Virginia Uniform Statewide Building Code (USBC)
- 2021 Virginia Construction Code (VCC)
- 2021 Virginia Plumbing Code
- 2021 Virginia Mechanical Code
- 2021 Virginia Fuel Gas Code
- 2021 Virginia Energy Conservation Code
- 2021 Virginia Residential Code (VRC)
- 2021 Virginia Existing Building Code
- 2021 International Fire Code (IFC)
- 2021Virginia Statewide Fire Prevention Code
- 2021 Virginia Building and Fire Code Related Regulations
- 2017 ANSI A117.1 Accessible & Usable Buildings & Facilities
- 2019 NFPA 13 Standard for the Installation of Sprinklers
- 2019 NFPA 72 National Fire Alarm Code
- 2020 NFPA 70 National Electrical Code
- 2021 International Swimming Pool and Spa Code (ISPSC)

Updated March 2024

ASCE Hazards Report

Address:
No Address at This Location

Standard: ASCE/SEI 7-22
Risk Category: II
Soil Class: D - Stiff Soil

Latitude: 37.417218
Longitude: -79.914577
Elevation: 1355.3382526293528 ft (NAVD 88)

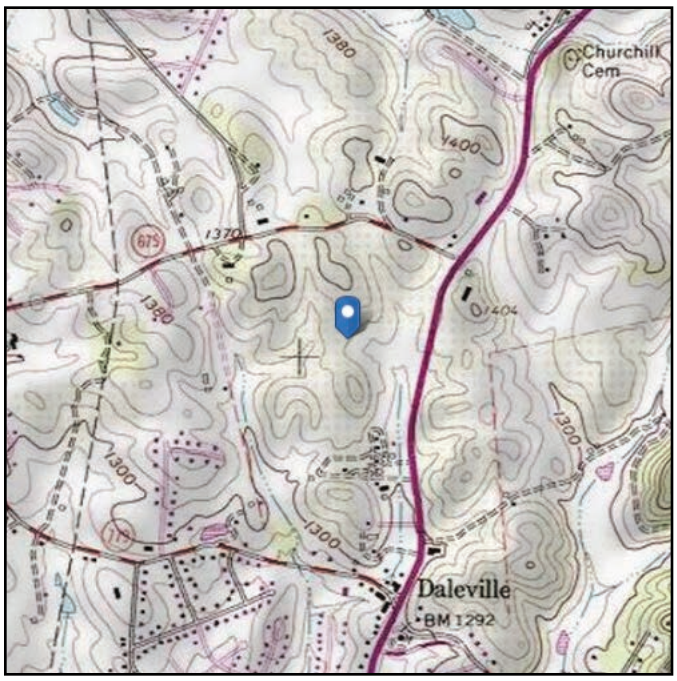

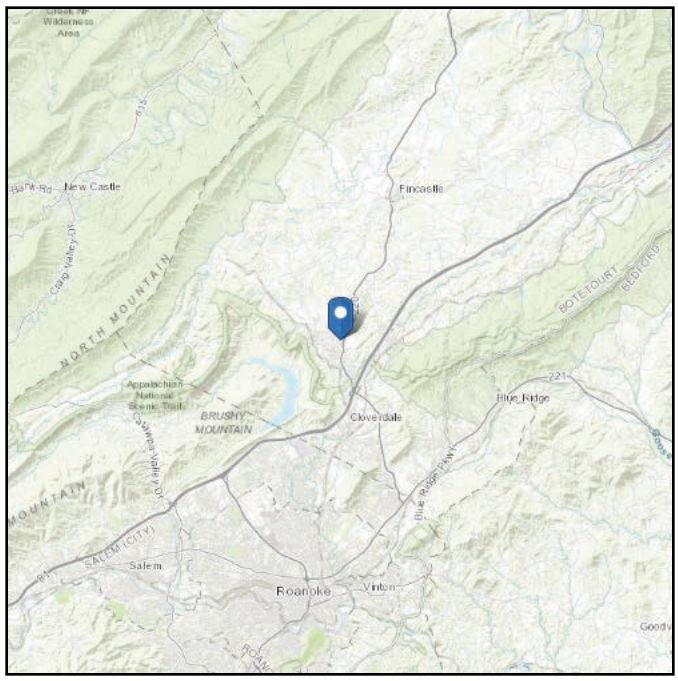

Seismic

Site Soil Class: D - Stiff Soil

Results:

PGA_M :	0.12	T_L :	12
S_{MS} :	0.26	S_S :	0.21
S_{M1} :	0.14	S_1 :	0.067
S_{DS} :	0.17	V_{S30} :	260
S_{D1} :	0.095		

Seismic Design Category: B

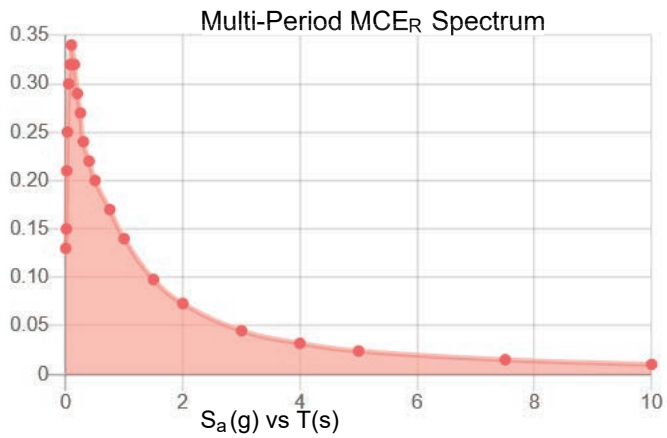

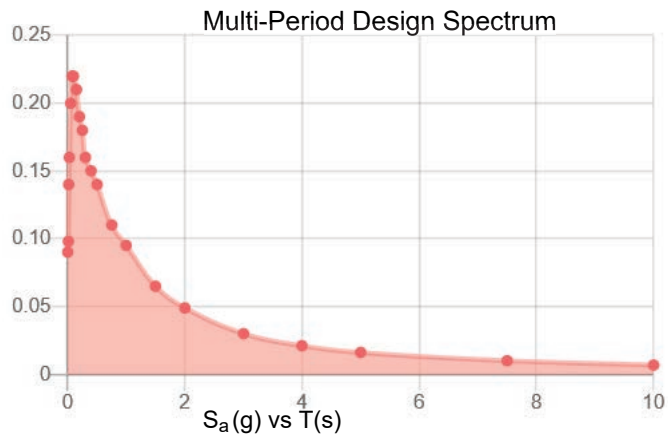

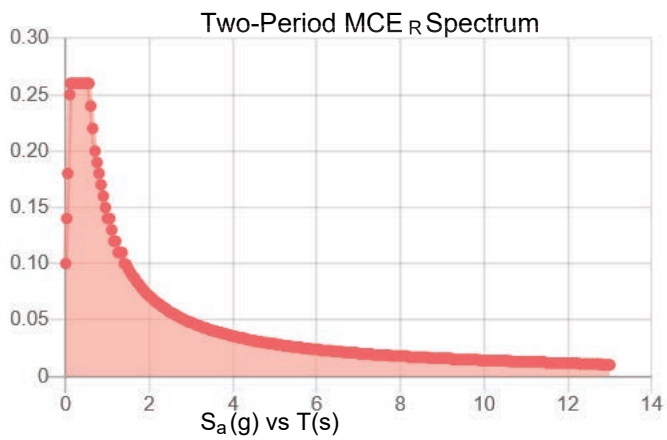

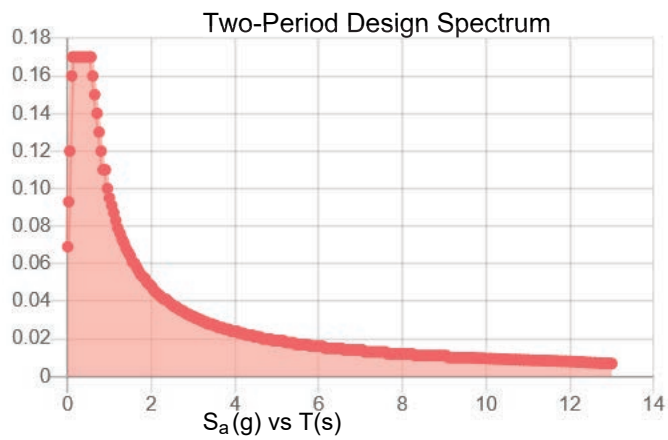

MCE_R Vertical Response Spectrum

Vertical ground motion data has not yet been made available by USGS.

Design Vertical Response Spectrum

Vertical ground motion data has not yet been made available by USGS.

Data Accessed: **Wed Nov 12 2025**

Date Source:
USGS Seismic Design Maps based on ASCE/SEI 7-22 and ASCE/SEI 7-22 Table 1.5-2. Additional data for site-specific ground motion procedures in accordance with ASCE/SEI 7-22 Ch. 21 are available from USGS.

The ASCE Hazard Tool is provided for your convenience, for informational purposes only, and is provided “as is” and without warranties of any kind. The location data included herein has been obtained from information developed, produced, and maintained by third party providers; or has been extrapolated from maps incorporated in the ASCE standard. While ASCE has made every effort to use data obtained from reliable sources or methodologies, ASCE does not make any representations or warranties as to the accuracy, completeness, reliability, currency, or quality of any data provided herein. Any third-party links provided by this Tool should not be construed as an endorsement, affiliation, relationship, or sponsorship of such third-party content by or from ASCE.

ASCE does not intend, nor should anyone interpret, the results provided by this Tool to replace the sound judgment of a competent professional, having knowledge and experience in the appropriate field(s) of practice, nor to substitute for the standard of care required of such professionals in interpreting and applying the contents of this Tool or the ASCE standard.

In using this Tool, you expressly assume all risks associated with your use. Under no circumstances shall ASCE or its officers, directors, employees, members, affiliates, or agents be liable to you or any other person for any direct, indirect, special, incidental, or consequential damages arising from or related to your use of, or reliance on, the Tool or any information obtained therein. To the fullest extent permitted by law, you agree to release and hold harmless ASCE from any and all liability of any nature arising out of or resulting from any use of data provided by the ASCE Hazard Tool.

Geotechnical Design Requirements

VIOLA ENGINEERING, PC

August 26, 2025

Attn: Fred LeGates
Poole & Poole Architecture

RE: Geotechnical Information

Project No.: 681-224-25

Dear Fred:

In order to provide the necessary engineering design for the above referenced project we recommend that a geotechnical investigation of the project site be performed and a written report prepared in accordance with Section 1803 of the current IBC code. The written report should include, but not be limited to, the following information:

A. General:

1. A plot showing the location of the soil investigations.
2. A complete record of the soil boring and penetration test logs and soil samples.
3. A record of the soil profile(s).
4. Elevation of the water table, if encountered.
5. Recommendations for the foundation type and design criteria, including, but not limited to:
    a. Allowable Soil Bearing Capacity of natural soils and/or compacted soils
    b. Required frost depth of footings
    c. Recommended minimum footing sizes
    d. Provisions to mitigate the effects of expansive soils
    e. Mitigation of the effects of liquefaction, differential settlement, and varying soil strength
    f. Effects of adjacent loads
6. Expected total and differential settlement. (Recommend 1 inch total and ½" differential settlement.)
7. Deep foundation information in accordance with IBC Section 1803.5.5, if required.
8. Special design and construction provisions for foundations of structures founded on expansive soils, as necessary.
9. Compacted fill material properties and testing in accordance with IBC Section 1803.5.8.
10. Controlled low-strength material properties and testing in accordance with IBC Section 1803.5.9.
11. Foundation and under slab drainage requirements.
12. Soil bearing requirements and subgrade reaction modulus for floor slab-on-grade design.

13575 Heathcote Blvd, Suite 170, Gainesville, VA 20155 Tel:571-261-9280 Fax:571-261-9286 www.cateseng.com

B. Basement & Retaining Walls:

1. Design active earth pressure
2. Design passive earth pressure
3. At-rest earth pressure
4. Angle of internal friction
5. Coefficient of friction for sliding resistance.
6. Percentage of vertical load to be applied to restrained and unrestrained walls.
7. Percentage of passive pressure to be used for resistance to sliding.
8. Recommended minimum factors of safety against sliding and overturning

C. Seismic Design Information:

1. Mapped spectral response accelerations S_S & S_1
2. Site Class Definition

Assume maximum wall service loads of 3 KLF and max column service loads of 15 kips.

Please feel free to contact me should you have any further questions or comments concerning this matter.

Sincerely,

Matthew Pocius, PE
Senior Project Manager
Cates Engineering

13575 Heathcote Blvd, Suite 170, Gainesville, VA 20155 Tel:571-261-9280 Fax:571-261-9286 www.cateseng.com